Oct. 6, 1925. 1,556,179

J. R. TITMAN

COMBINED CHOKE AND NEEDLE VALVE CONTROL

Filed May 13, 1924

Fig. 1.

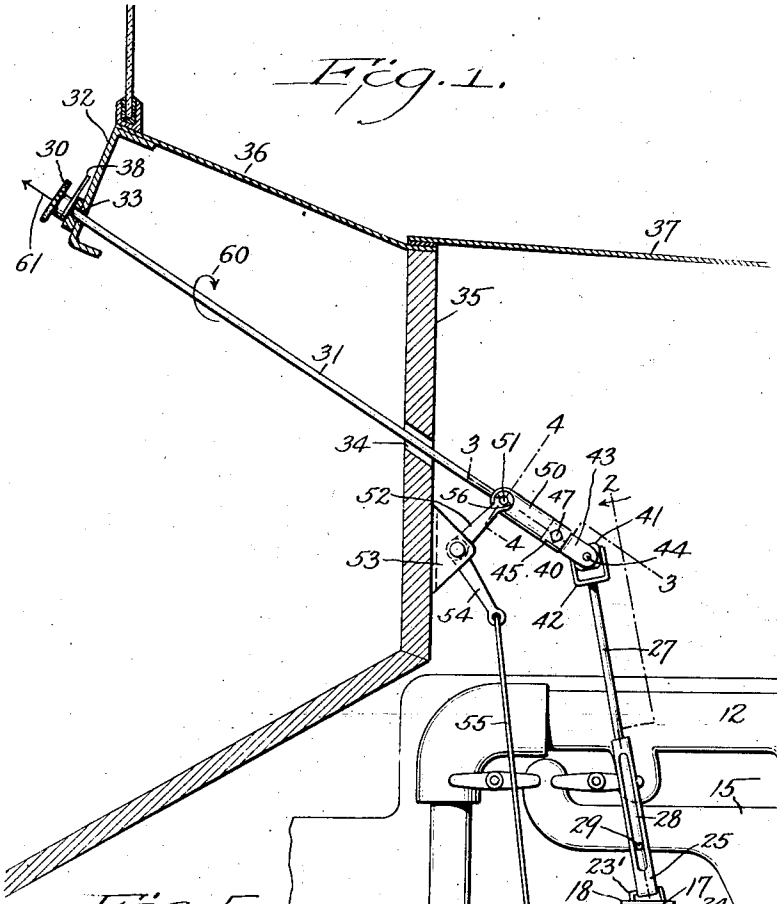

Fig. 2.

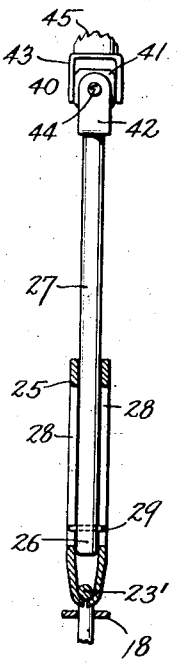

Fig. 5.

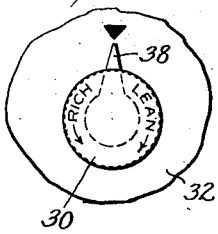

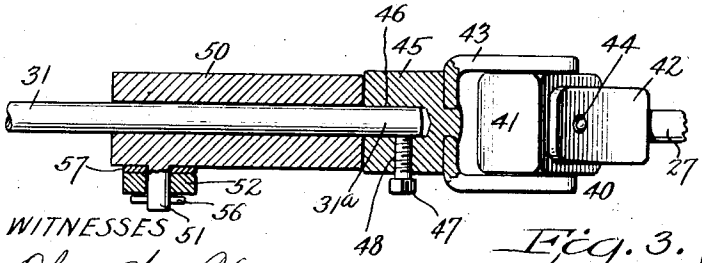

Fig. 3.

Fig. 4.

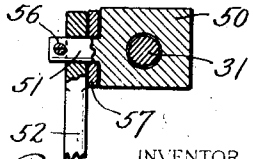

WITNESSES

Oliver W. Holmes

INVENTOR,
J. Russell Titman,
BY
Henry J. Lucke,
ATTORNEY.

Patented Oct. 6, 1925. 1,556,179

UNITED STATES PATENT OFFICE.

JACOB RUSSELL TITMAN, OF RAHWAY, NEW JERSEY, ASSIGNOR OF ONE-THIRD TO GEORGE B. TITMAN AND ONE-THIRD TO SHERMAN F. TITMAN, BOTH OF RAHWAY, NEW JERSEY.

COMBINED CHOKE AND NEEDLE VALVE CONTROL.

Application filed May 13, 1924. Serial No. 712,992.

To all whom it may concern:

Be it known that I, JACOB RUSSELL TITMAN, a citizen of the United States of America, residing at Rahway, county of Union, State of New Jersey, have invented certain new and useful Improvements in Combined Choke and Needle Valve Controls, of which the following is a specification.

This invention relates to improved combined choke and needle valve control for carburetors and like devices.

An object of this invention is to provide improved means for controlling the needle valve of a carburetor, to thereby regulate the proportion of gaseous fuel of the explosive mixture supplied by the carburetor.

A further object of the invention is to provide improved means for controlling a choke valve or equivalent of the carburetor.

The usual approved type of carburetor for Ford automobiles comprises a threaded needle valve stem for adjusting by rotational movement the jet of the gasoline or like liquid fuel discharged by the nozzle in the mixing chamber; the carburetor is also provided with a choke in the form of a butterfly valve, located in the main air inlet passage leading to the mixing chamber. The butterfly valve is rotationally mounted on a shaft, one end of which shaft extends exteriorly of the casing of the carburetor, at which exterior shaft end an arm is attached. To the arm of the butterfly shaft is connected a wire leading to a bell crank, or by means of an equivalent connection, to effect when pulled the movement of the butterfly valve from its normally open position to its partially or wholly closed position to prime the motor. A compressional spring, usually a coiled spring encircling the exterior shaft end, serves normally to hold the butterfly valve in its fully open position and to return the butterfly valve to its fully open position from a partially or wholly closed position. Usually, the arm of the choke valve is one arm of a bell crank, the other arm of the bell crank being utilized for connection by means of a wire or equivalent extending forwardly of the radiator to afford priming of the carburetor when the motor is being manually cranked.

Pursuant to the preferred forms of the invention, the needle valve control and the choke control of a carburetor are combined as a unitary device, affording convenience of operation by the use of a single manipulating member, and convenience of location, as adjacent the dash-board of an automobile or like location within easy accessibility from the steering wheel, whereby the regulation of the needle valve and the choke may be simultaneously effected to variable extents as desired and to permit independent regulation of either as desired. Such preferred form comprises suitable means carried by the device for connection with the stem of the needle valve whereby upon rotation of the manipulating member the needle valve is readily and accurately set and upon longitudinal movement of the manipulating member the extent of opening and closing of the choke valve is had in correspondence to the extent of longitudinal movement of the manipulating member and independently of the rotary movement of the manipulating member for adjustment of the needle valve.

Further features and objects of the invention will be more fully understood from the following detail description and the accompanying drawings, in which

Fig. 1 is a diagrammatic view, showing in side elevation a carburetor and co-ordinated parts of an automotive engine, and representing in vertical section the cowl and dash-board of an automobile;

Fig. 2 is a sectional elevation on line 2—2 of Fig. 1, on a somewhat enlarged scale;

Fig. 3 is a sectional elevation on line 3—3 of Fig. 1, on a greatly enlarged scale;

Fig. 4 is a sectional elevation on line 4—4 of Fig. 1, on the same scale as Fig. 3; and

Fig. 5 is a detail front elevation of the manipulating member and a portion of the dash-board.

Referring to Fig. 1, of the drawings, the carburetor is indicated at 10, which may be of any approved type. The air inlet of the carburetor is shown at 11, which may be connected to an air-stove 12, or communicate directly with the atmosphere, as desired. The discharge 13 of the carburetor communicates in any desirable manner with the inlet 14 of a manifold 15 to the respective cylinders of the explosive engine, indicated generally at 16.

The threaded stem of the carburetor is

shown at 17 and is illustrated as provided with any approved adjusting member 18, having a pair of spaced openings.

The choke of the carburetor is usually in the form of a butterfly valve, the shaft 19 of which extends exteriorly of the casing 11 of the inlet of the carburetor, 10, to which shaft 19 is secured the bellcrank 20, having a connection opening 21 in its one arm for regulation from the dash-board side and the connection opening 22 for regulation by means of the link 23 from the radiator side. The butterfly valve of the usual Ford carburetor is normally held in its fully open position by means of a spring (not shown).

My improved combined needle valve and choke regulator comprises suitable means such as the fork 23′ for coupling with the spaced openings of the adjusting plate 18 of the valve stem 17. The forked member 23′ may be locked to the plate 18 by means of one or more cotter pins 24. Such forked member 23′ is carried by the sleeve member 25, see also Fig. 2, slidably receiving the end 26 of the arm 27, as by the provision of the elongated slots 28, 28 in the sleeve member 25, into which slots 28, 28 projects the opposite ends of the pin 29, secured to the arm 27, as by a tight fit in a perforation adjacent the end 26 of the arm 27.

The manipulating member is shown in Fig. 1 is in the form of a knob 30, see also Fig. 5, secured at the upper end of the arm 31 to extend adjacent the dash-board 32, within convenient reach of the operator when seated at the steering wheel (not shown). A convenient form of mounting, is by drilling an opening 33 in the dash-board 32, which opening 33 may be slightly larger than the diameter of the arm 31, and also by forming the opening 34 in the usual partition or dash 35 within the cowl 36 of the automobile and enclosed by the hood 37. The opening 34 is of somewhat enlarged dimension to afford vertical movement of the arm 31, as will appear more fully hereinafter. The manipulating member 30 may be provided with a pointer 38, to indicate its neutral position when standing vertically upward. A turn of the manipulating member 30 and its pointer 38 to the left increases to a corresponding extent the richness of the explosive mixture, whereas a turn of the manipulating member 30 and its indicator 38 to the right effects to a corresponding extent a leanness of the explosive mixture.

The arm 31 is connected to the arm 27 by means of a knuckle joint 40, preferably formed, see Fig. 3, of a cube 41 of metal or the like, pivotally connected on two of its opposite faces with the fork 42 of metal or like resilient material, secured at the upper end of the arm 27; the cube 41 is similarly pivotally connected at two of its other opposite faces to the fork 43 of metal or like resilient material, carried at the lower end of the arm 31.

Preferably, the pivotal connections of the forks 42, 43, with the cube 41 is by center-punching the proper faces of the cube 41, and depressing the ends of the forks as indicated at 44, to provide pivotal projections extending into the center-punchings respectively, under resilient pressure of the respective fork ends.

The fork 43 is preferably connected to the arm 31 by suitable adjustable means, as by the stud 45 having a central recess 46 for receiving the lower end 31ª of the arm 31 and a set screw 47 extending through a suitably threaded opening 48 transversely to the recess 46.

Suitable connection is provided between the arm 31 and the bellcrank 20 of the choke valve of the carburetor 10, as by means of the sleeve 50 having the laterally extending pivot lug 51 for insertion through a pivot opening in the arm 52 of a suitable bellcrank, such as is illustrated in Fig. 1, and mounted on the bracket 53 secured to the partition or dash 35; the other arm 54 of such bellcrank is connected to the upper end of the link 55 and the lower end of the link 55 is pivotally connected in the opening 21 of the bellcrank 20 of the choke valve of the carburetor 10. The bellcrank arm 52 may be locked pivotally to the lug 51 by means of a cotter pin 56, or the like, and a washer 57 may be employed if necessary.

The length of the sleeve 50 when in abutting relation with the stud 45, for the desired setting of the arm 31 by means of the set screw 47, is such that when the manipulating member 30 is in its fully depressed position, as indicated in Fig. 1, it permits the usual return spring of the carburetor choke valve to return said choke valve to its fully opened position. Such desired setting is attained by the adjustment afforded by the recess 46 of the stud 45 and the set-screw 47.

As indicated above, the richness or leanness of the gaseous mixture is attained by rotating the manipulating member 30 either to the right for leanness, as indicated by the arrow 60, see Fig. 1, or to the left for richness. In such operation, the collar 59 remains in quiescent relation to the bellcrank arm 52. The desired extent of rotation of the stem 17 of the needle valve is attained by the rotative transmission afforded by the forked joints, by reason of the forks 43, 42 being located in right-angular or other transverse relation, the rotative movement being transmitted correspondingly to the arm 47, thence to its pin 29, the sleeve member 28, thence to the fork 23′ and finally to the adjusting plate 18 of the needle valve stem 17. It will be noted that the provision

of the connection of the pin 29 in the slots 28 accommodates movement of the sleeve member 25 longitudinally of the arm 27 and its end 26, and affords nicety of arcuate setting of the needle valve corresponding accurately to the extent of the arc of movement of the manipulating member 30. The fork connection 23′ of the arm 27 with the apertured plate 18 of the needle valve stem 17 provides for a rocking movement of the fork 23′ relatively to the plate 18, but substantially without loss of arcuate transmission. Such arrangement simplifies the assembly and mounting of the device, without sacrifice of accuracy of setting.

For convenience of construction and directness of operation, the fork 23′ may be pivotally carried at the end of the sleeve member 25, for which purpose, the sleeve member may be formed of a tube, its opposite slots 28, 28 cut by a circular "rip" saw and its lower end open-slotted and flattened to receive the body portion of the fork 23′ and thereafter pinched to embrace the same.

The choke valve of the carburetor is regulated by axial or longitudinal movement of the arm 31, namely by the operator pulling the manipulating member 30 in the direction of the arrow 61, see Fig. 1, thereby actuating the collar 50 in the corresponding direction as the arrow 60, and to corresponding extent by reason of the stud 45 engaging the collar 50 and serving as a stop means therefor, whereby the bellcrank arm 52 is oscillated and the wire 55 or equivalent is correspondingly displaced to rotate the bellcrank 20 of the choke valve of the carburetor 10, also to a corresponding extent. By reason of the device being fulcrumed at its opposite ends, the opening 23 in the partition 35 is elongated vertically. From the above, it will appear that upon completing the priming of the motor as when starting the motor, the operator depresses the manipulating member 30, with or without turning the manipulating member 30, whereby the arm means comprising the upper arm and the lower arm is reduced in effective length by its mutually sliding members, and effects the movement of the stop means or stud 45 to afford a return of the sleeve 50 and the arm 20 of the carburetor choke valve to return the choke valve to its fully open position under action of its return spring.

From the above, it will be observed that my control affords when desired the joint operation of the needle valve of the carburetor and of the choke valve of the carburetor to such extents of either as may be desired when priming or otherwise controlling the motor, as well as to afford independent operation of the needle valve and independent operation of the choke valve.

The construction of my combined control device is simple in assembly, thus facilitating the installation of my device on the automobile by a minimum number of fitting operations, adjustments and connections. The provision of a single stop means for the sleeve controlling the choke valve for exerting a pull on the wire 55 of the choke is advantageous, in that the installation of my control device involves the simple adjustment of the length of the arm 31 by the set screw 47, whereby the stud 45 is brought into abutting relation with the sleeve 50, as hereinabove set forth, when the arm means is reduced to its minimum effective length.

The absence of any stop for the sleeve 50 on the arm 31 on the side of the sleeve 50 opposite to that of the stud 45, enables the parts of my control device when the manipulating member is depressed by the operator to be speedily returned to its fully returned position, the return spring of the choke valve of the carburetor positively assisting in the return movement of the parts of my control device and as well returning the choke valve to its fully open position in a minimum period of time, thus obviating any tendency of the carburetor to flood.

Whereas, I have described my invention by reference to specific forms thereof, it will be understood that many changes and modifications may be made without departing from the spirit of the invention.

I claim:—

1. An adjusting device for a carburetor provided with a rotatably adjustable needle valve stem and a choke, comprising an arm, a manipulating member secured at one end of said arm for setting said arm, arm means pivotally connected at one of its ends to said rotatably adjustable needle valve stem, said arm means comprising telescopically related members, rotation transmitting connection means connecting the other end of said arm means with the other end of said first-named arm, means rotatably loosely mounted on said device for operating said choke and stop means for limiting the movement of said choke operating means axially of said first named arm.

2. An adjusting device for a carburetor provided with a rotatably adjustable needle valve stem and a choke, comprising an arm, a manipulating member secured at one end of said arm for setting said arm, arm means pivotally connected at one of its ends to said rotably adjustable needle valve stem, said arm means comprising telescopically related members, rotation transmitting connection means connecting the other end of said arm means with the other end of said first-named arm, sleeve means rotatably loosely mounted on said device for operating said choke and stop means carried by said first-named arm

for limiting the movement of said choke operating sleeve means axially of said first-named arm.

3. An adjusting device for a carburetor provided with a rotatably adjustable needle valve stem and a choke, comprising an arm, a manipulating member secured at one end of said arm for setting said arm, means adjacent the other end of said arm for adjusting the effective length of said arm, arm means pivotally connected at one of its ends to said rotatably adjustable needle valve stem, said arm means comprising telescopically related members, rotation transmitting connection means connecting the other end of said arm means with the other end of said first-named arm, means rotatably mounted on said device for operating said choke and stop means for limiting the movement of said choke operating means axially of said first named arm.

4. An adjusting device for a carburetor provided with a rotatably adjustable needle valve stem and a choke, comprising an arm, a manipulating member secured at one end of said arm for setting said arm, means adjacent the other end of said arm for adjusting the effective length of said arm, arm means pivotally connected at one of its ends to said rotatably adjustable needle valve stem, said arm means comprising telescopically related members, rotation transmitting connection means connecting the other end of said arm means with the other end of said first-named arm, means rotatably loosely mounted on said first-named arm for operating said choke operating means axially of said device, and stop means for limiting the movement of said choke operating means axially of said first named arm.

5. An adjusting device for a carburetor provided with a rotatably adjustable needle valve stem and a choke, comprising an arm means, a manipulating member secured at one end of said arm means for setting said arm means, means adjacent the other end of said arm means for adjusting the effective length of said arm means, means at one end of said arm means for pivotal connection with said rotatably adjustable needle valve stem, said arm means further comprising telescopically related members, rotation transmitting connection means for said arm means, means rotatably loosely mounted on said device for operating said choke and stop means carried by said arm means for limiting the movement of said choke operating means axially of said arm means.

6. An adjusting device for carburetors provided with a rotatably adjustable needle valve stem and a choke having a spring normally holding said choke in its open position, comprising arm means, a manipulating member secured adjacent one end of said arm means for imparting at will either rotational or axial displacement or both to said arm means, said arm means comprising telescopically related members for securing varying effective length of said arm means incident upon axial displacement of said manipulating member, articulated means for said arm means for transmitting rotational movement to said adjustable needle valve stem, means freely rotatably mounted on said arm means for operating said choke and a stop carried by said arm means, said stop being disposed between said choke operating means and said articulated means whereby upon axial displacement of said manipulating member in the direction from said carburetor said stop serves to limit the movement of said choke operating means axially of said arm means, said arm means being free from any stop for said choke operating means in the opposite direction of axial displacement.

7. An adjusting device for carburetors provided with a rotatably adjustable needle valve stem and a choke having a spring normally holding said choke in its open position, comprising arm means, a manipulating member secured adjacent one end of said arm means for imparting at will either rotational or axial displacement or both to said arm means, said arm means comprising telescopically related members for securing varying effective length of said arm means incident upon axial displacement of said manipulating member, articulated means for said arm means for transmitting rotational movement to said adjustable needle valve stem, a collar loosely mounted on said arm means for operating said choke and a stop carried by said arm means, said stop being disposed between said collar and said articulated means whereby upon axial displacement of said manipulating member in the direction from said carburetor said stop serves to limit the movement of said collar axially of said arm means, said arm means being free from any stop for said collar in the opposite direction of axial displacement.

8. The combination with a carburetor provided with a rotatably adjustable needle valve stem and a choke having a spring tending to resiliently return said choke to its open position; of an adjusting device having a manipulating member for regulating to any desired extent the adjustment of said needle valve by rotary movement and for setting said choke at any desired extent by axial displacement, arm means carrying said manipulating member at its one end, means at the opposite end of said arm means for pivotal connection with said rotatably adjustable needle valve stem, said arm means comprising telescopically related sliding members for attaining variable effective length of said arm means incident upon axial displacement of said manipulating member,

rotation transmitting articulated means for said arm means for effecting rotational displacement of said rotatably adjustable needle valve stem, a collar rotatably loosely mounted on said arm, means to afford rotational movement of said arm means freely of said collar, means connecting said collar with said choke for operating said choke upon axial displacement of said collar in one direction and stop means on said arm means for engaging said collar when said manipulating member and therewith said arm means are axially displaced in said one direction and thereby operate said choke to any desired extent independently of the extent of adjustment of said needle valve stem.

9. The combination with a carburetor provided with a rotatably adjustable needle valve stem and a choke having a spring tending to resiliently return said choke to its open position; of an adjusting device having a manipulating member for regulating to any desired extent the adjustment of said needle valve by rotary movement and for setting said choke at any desired extent by axial displacement, arm means carrying said manipulating member at its one end, means at the opposite end of said arm means for pivotal connection with said rotatably adjustable needle valve stem, said arm means comprising telescopically related members for attaining variable effective length of said arm means incident upon axial displacement of said manipulating member, rotation transmitting articulated means for said arm means for effecting rotational displacement of said rotatably adjustable needle valve stem, a collar rotatably loosely mounted on said arm means to afford rotational movement of said arm means freely of said collar, means connecting said collar with said choke for operating said choke upon axial displacement of said collar in one direction and stop means on said arm means for engaging said collar when said manipulating member and therewith said arm means are axially displaced in said one direction, said arm means being free of any stop for said collar in its opposite axial displacement and thereby operate said choke to any desired extent independently of the extent of adjustment of said needle valve stem.

In testimony whereof I have signed this specification this 25th day of April, 1924.

J. RUSSELL TITMAN.