(No Model.) 2 Sheets—Sheet 1.

H. HORLYCK.

MILKING APPARATUS.

No. 459,582. Patented Sept. 15, 1891.

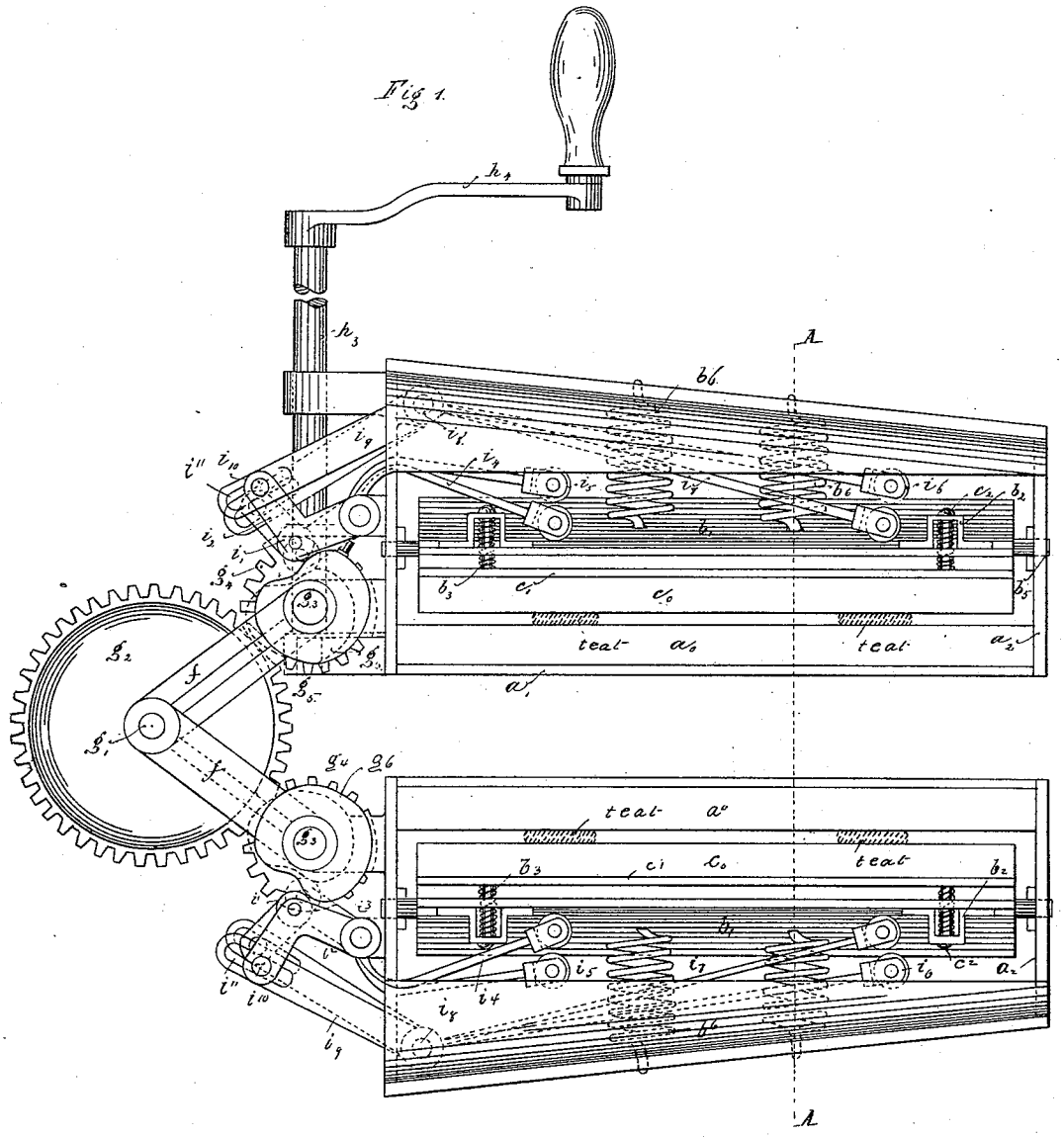

Witnesses:
Henry Huber
W Reimher

Inventor:
Hans Horlyck
by Goepel & Raegener
Attorneys.

THE NORRIS PETERS CO., PHOTO-LITHO., WASHINGTON, D. C.

(No Model.)

2 Sheets—Sheet 2.

H. HORLYCK.

MILKING APPARATUS.

No. 459,582. Patented Sept. 15, 1891.

Fig 2.

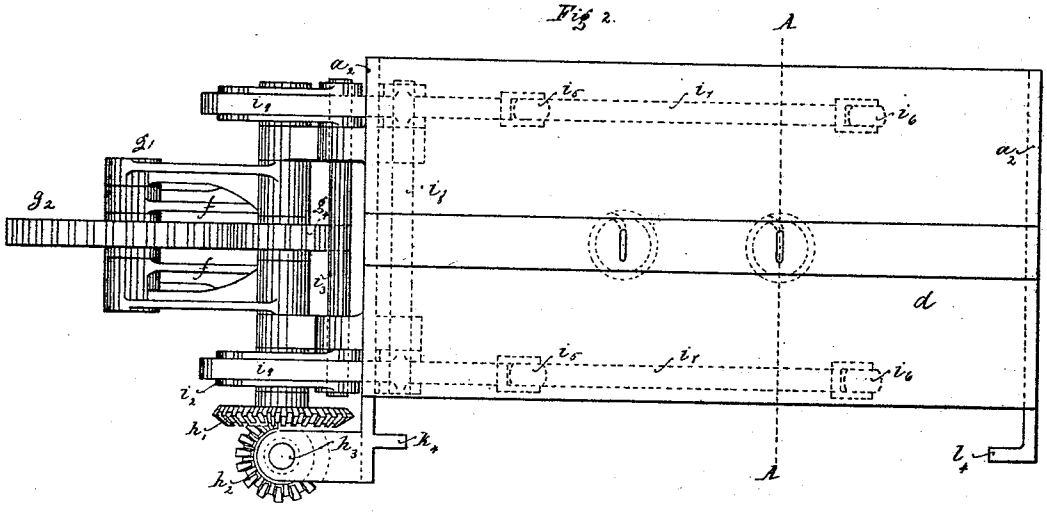

Fig 3.

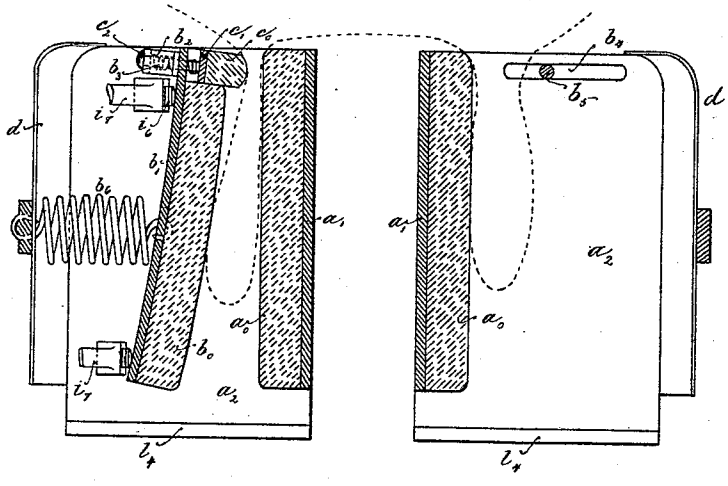

Witnesses:
Henry Huber
Meinken

Inventor
Hans Hörlyck
by Goepel & Paegener
Attorneys.

THE NORRIS PETERS CO., PHOTO-LITHO., WASHINGTON, D. C.

UNITED STATES PATENT OFFICE.

HANS HORLYCK, OF BASTRUP, DENMARK.

MILKING APPARATUS.

SPECIFICATION forming part of Letters Patent No. 459,582, dated September 15, 1891.

Application filed January 21, 1891. Serial No. 378,603. (No model.)

To all whom it may concern:

Be it known that I, HANS HORLYCK, a citizen of Denmark, residing at Bastrup, Denmark, have invented certain new and useful Improvements in Milking Apparatus; and I do declare the following to be a full, clear, and exact description of the invention, such as will enable others skilled in the art to which it appertains to make and use the same.

This invention relates to an improved cow-milker; and the object is to provide a cow-milker by means of which the hand-milking process can be closely imitated.

The invention consists in the combination, with a suitable frame, of fixed and movable pads or cushions placed at opposite sides of the teats, the movable cushions being provided at their upper ends with projections which close the upper ends of the channels in the teats, and then the movable cushions or pads compress the teats and force the milk out of the same, thus extracting the milk from the udder in a manner closely resembling hand-milking.

The invention also consists in the construction and combination of parts and details which will be fully described hereinafter, and finally pointed out in the claims.

Figure 1 in the accompanying drawings is a plan view of my improved cow-milker. Fig. 2 is a side view of the same. Fig. 3 is a vertical transverse sectional view of the same on the line A A, Figs. 1 and 2.

Similar letters of reference indicate corresponding parts.

Each section of the milking apparatus is constructed with two cushions or pads a^0 and b^0, between which the teats are placed, as shown in dotted lines in Fig. 3, the teats resting against the cushion or pad a^0. The cushion a^0 is fixed to a plate a', which in turn is secured to the end plates a^2, forming the frame with a casing d. On the top of the movable pad or cushion b^0 an additional cushion c^0 is arranged, which is of slight thickness, as it is used only to close the upper end of the teat. The plate c', to which the pad or cushion c^0 is secured, is provided on its outer side with two pivots or pins c^2, that pass through the plate b', to which the cushion or pad b^0 is fastened, and also pass through two guide projections b^2 on the outer side of said plate b' at the top of the same. The spiral springs b^3, surrounding the pivots c^2, are arranged between the plate c' of the pad or cushion c^0 and the guide projections b^2 and press the upper cushion c^0 toward the teat until the heads of the pivots c^2 rest against the guide projections b^2. The cushion or pad c^0 thus projects slightly beyond the outer face of the cushion or pad b^0, as shown in Fig. 3. The plate b' of the pad or cushion b^0 is provided at its upper end with two guide-pins b^5, which are guided in horizontal slots in the two end plates a^2, thus guiding the pads or cushions b^0 and c^0 toward or from the teats. The spiral springs b^6, fastened to the plate b' and to the casing or hood d, draw the cushions b^0 and c^0 in the direction from the teats. The two milking devices belonging to one apparatus are connected by the four rods or bars f with each other, each bar f being provided at the outer end with an eye, through which the common shaft g' passes, said shaft carrying the toothed wheel g^2, adapted to engage the two cog-wheels g^4, fastened on the shafts g^3, which are mounted to turn on suitable lugs in the end of the casing of the milking apparatus and in eyes on the inner ends of the rods f. Above and below the rods f each shaft g^3 is provided with the cam-disks g^5 and g^6, and one of the shafts g^3 is provided on its lower end with the beveled cog-wheel h', engaged with a beveled cog-wheel h^2 on a horizontal shaft h^3, suitably mounted to turn in lugs on one of the casings, which shaft is provided on its outer end with a crank-handle h^4 for turning it. Said cam-disks g^5 and g^6 act on the friction-rollers i' i', pivoted at the angles of elbow-levers i^2, mounted to turn on the pivots i^3 of the end plates a^2. Each elbow-lever is provided with a spring-arm i^4, provided at its free end with a friction-roller i^5, adapted to act on that end of the plate b' of the cushion b^0 nearest the lever. On the opposite ends of the plates b' of the cushion b^0 the friction-rollers i^6 rest, which are mounted to turn in the ends of spring-arms i^7, projecting from the pivoted ends of levers i^9, mounted to turn on the pivots i^8 on one of the end plates a^2. Said arms i^9 have longitudinal slots i^{11}, into which pins i^{10} on the ends of elbow-levers i^2 can pass.

In using the machines they are so applied that the teats rest against the fixed cushions

or pads a', as shown in dotted lines in Fig. 3. By turning the crank h^4 the two shafts g^3 and their cam-disks g^5 and g^6 are rotated, and thereby the elbow-levers i^2 are moved in such a manner that the upper ends of the movable pads b are pressed toward the teats in the position shown in Fig. 3, whereby the upper end of the canals in the teats are closed by the upper cushion c^0. The clamping-cushion c^0 and the upper edge of the milking-cushion b^0 for the time being remain in this position, and the second cams now begin to act the second set of spring-arms, whereby the lower parts of the milking-cushions are slightly pressed toward the fixed cushions or pads, and thereby the milk is pressed out of the teats, the clamping-cushion c^0, which closes the upper ends of the canals in the teats, preventing the cushions from pressing the milk back into the udder. By the time the milk has been pressed out of the teats the cams have been moved to such an extent as to no longer exert pressure on the levers acting on the milking-cushions, thus permitting the spiral spring b^6 to move the milking-cushions back into the original positions. In this manner the cushions act on the teats as long as the crank is turned.

Having thus described my invention, I claim as new and desire to secure by Letters Patent—

1. A milking apparatus constructed with a fixed cushion against which the teat can be rested, a movable cushion adapted to be moved toward said fixed cushion, and a projecting cushion on the top of the movable cushion, which projecting cushion is adapted to be adjusted on the top of the movable cushion, substantially as set forth.

2. In a milking apparatus, the combination, with a suitable frame, of a fixed cushion or pad against which the teat can be rested, a movable cushion or pad adapted to be moved toward said fixed cushion, an additional cushion on the top of the movable cushion and projecting beyond the face of the same, springs for pressing said top projecting cushion in the direction toward the teat, and mechanism for pressing the movable cushion toward the fixed cushion, substantially as set forth.

3. In a milking apparatus, the combination, with two frames or casings, of a fixed cushion in each against which the teat can be rested, a movable cushion in each casing, mechanism in each casing for operating the movable cushion, rods projecting from the frames, a common driving-shaft in the outer ends of said rods, individual driving-shafts for each casing in the inner ends of the rods, and mechanism for rotating said shafts, substantially as set forth.

4. In a milking apparatus, the combination, with two casings, each containing a fixed cushion, a movable cushion adapted to move toward the fixed cushion, mechanism for pressing the movable cushion toward the fixed cushion, rods on the ends of the casings, a common shaft in the outer ends of said rods, individual driving-shafts for each casing in the inner ends of the rods, cog-wheels mounted on the several shafts and engaged with each other, a bevel cog-wheel on the lower end of one of the individual shafts, a crank-shaft having a cog-wheel engaged with the cog-wheel on the individual shafts, and cam-disks on the individual shafts for operating the mechanism in the casings, substantially as set forth.

In testimony whereof I affix my signature in presence of two witnesses.

HANS HORLYCK.

Witnesses:
J. SAVÁDO,
N. SCHRÓMAY.