Feb. 11, 1941. D. M. DOW ET AL 2,231,326

VACUUM CLEANER

Filed Nov. 5, 1937 3 Sheets-Sheet 1

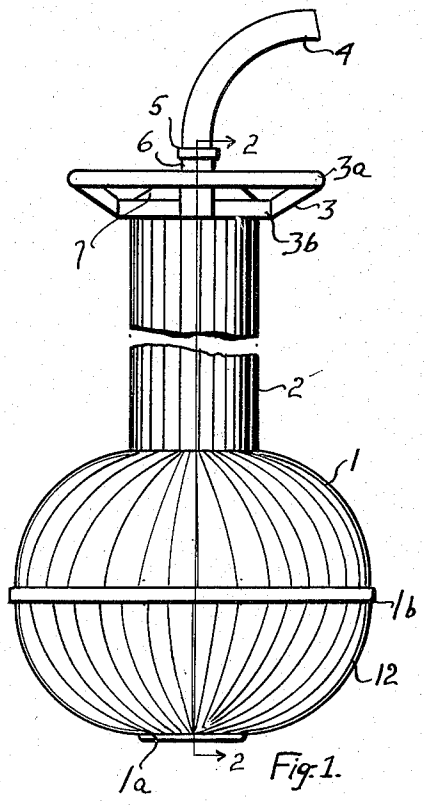

Fig. 1.

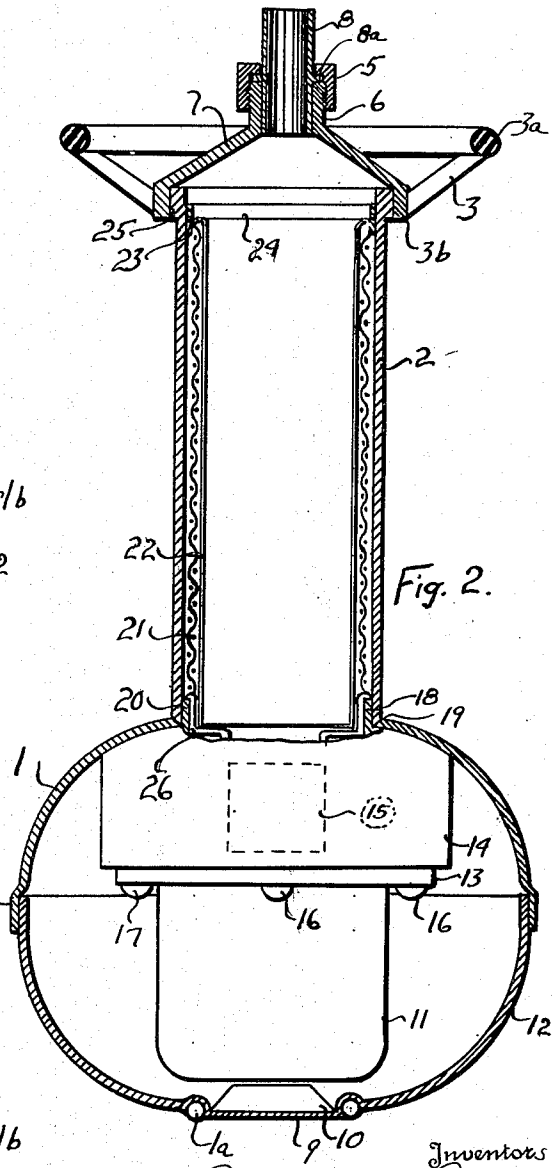

Fig. 2.

Fig. 3.

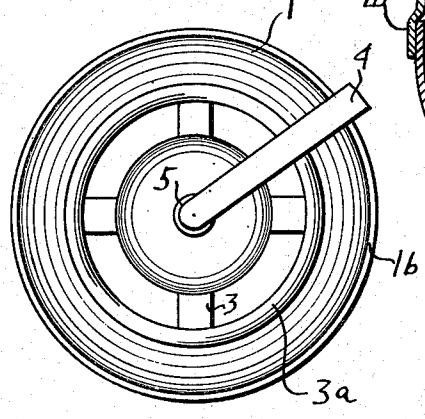

Inventors

Dewey M. Dow

Alfred F. Deery

Donald L. Boyd

By

Alfred F. Deery Attorney

Feb. 11, 1941. D. M. DOW ET AL 2,231,326

VACUUM CLEANER

Filed Nov. 5, 1937 3 Sheets-Sheet 2

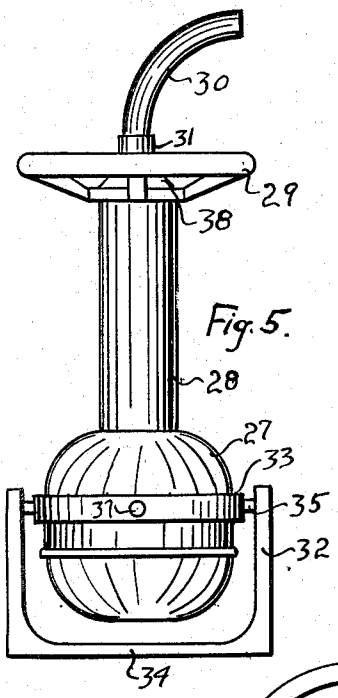

Fig. 5.

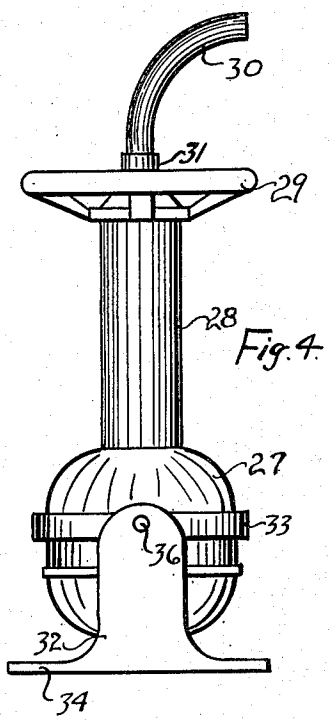

Fig. 4.

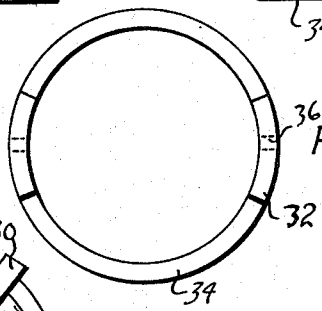

Fig. 7.

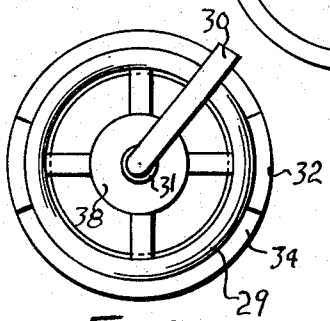

Fig. 6.

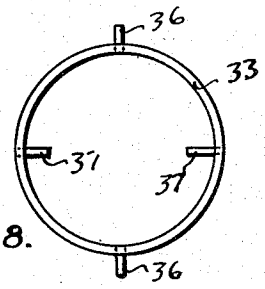

Fig. 8.

Inventors

Dewey M. Dow

Al Judt Rees

Donald L. Boyd

By

Al Judt Rees Attorney

Feb. 11, 1941. D. M. DOW ET AL 2,231,326

VACUUM CLEANER

Filed Nov. 5, 1937 3 Sheets-Sheet 3

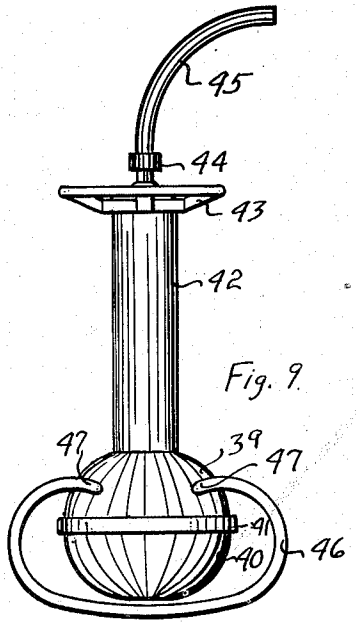

Fig. 9

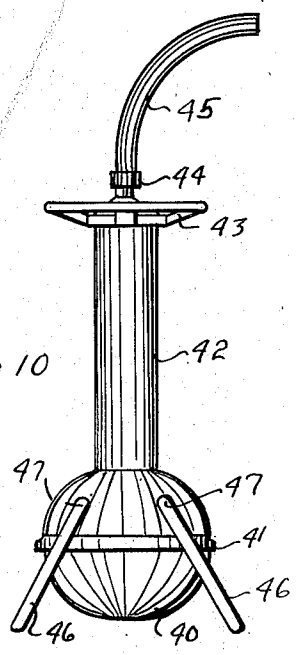

Fig 10

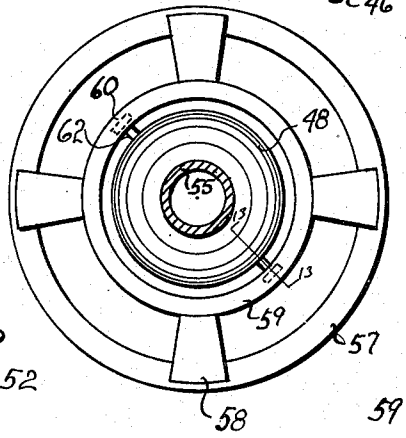

Fig. 11

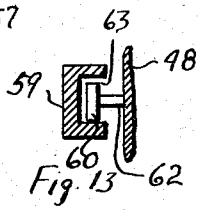

Fig. 13

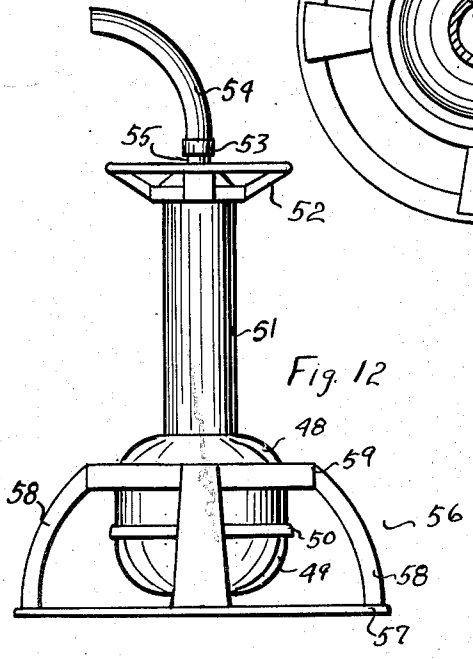

Fig. 12

Inventors
Dewey M. Dow
Alfred F. Dees
Donald L. Boyd.

By
Alfred F. Dees
Attorney

Patented Feb. 11, 1941 2,231,326

UNITED STATES PATENT OFFICE

2,231,326

VACUUM CLEANER

Dewey M. Dow, Alfred F. Dees, and Donald L. Boyd, Toledo, Ohio, assignors to Air-Way Electric Appliance Corporation, Toledo, Ohio, a corporation of Delaware

Application November 5, 1937, Serial No. 172,996

7 Claims. (Cl. 183—37)

This invention relates to vacuum cleaners and more specifically is directed to a cleaner so constructed and arranged that it will maintain itself in a vertical position during the normal course of its operation by virtue of its inherent construction and organization.

An object of this invention is to construct a vacuum cleaner which is capable of maintaining itself and returning itself to a substantially vertical position when displaced from the vertical as a result of the operator's drawing it from said vertical position during the course of its operation.

Another object of this invention is to so construct and arrange the base portion of the cleaner such that the device may be counterbalanced either by an auxiliary counterbalancing weight or by the weight of the motor tending to draw the upper portion of the cleaner into a substantially vertical position.

Another object of this invention is to utilize the weight of the motor plus the weight of the fan and fan chamber in maintaining the vertical equilibrium of the cleaner.

Another object of this invention is to produce a structure that is light in weight and therefore easily maneuvered and transported about from place to place by the operator.

A still further object of this invention is to so construct and arrange the upper portion of the cleaner in a manner such that in the event of its being tipped from side to side the likelihood of injury to articles of furniture and the interior trim of the home and decorations therein will be prevented and that they may in no way be defaced as a result of the upper portion of the cleaner coming into violent contact therewith.

A still further object of this invention is to organize and assemble the base portion of the cleaner such that the possibility of its being tipped over completely to its side will be practically impossible.

The above and further objects will be set forth hereinafter as the detailed description proceeds such that anyone skilled in the art to which it appertains may by applying the principles described reproduce same. All alterations, modifications of the preferred structure are intended to be included within the spirit and scope of this invention as defined and set forth in the appended claims and as further described hereinafter in connection with the accompanying drawings in which:

Fig. 1 shows a general exterior vertical view of the cleaner;

Fig. 2 is a vertical sectional view along the line 2—2 of Fig. 1;

Fig. 3 is a top plan view of the cleaner device of Fig. 1;

Fig. 4 is a modification of the base assembly of the cleaner;

Fig. 5 shows a view of the same cleaner 90 degrees displaced from the view of the device of Fig. 4;

Fig. 6 is a top plan view of the device of Fig. 4 and Fig. 5;

Fig. 7 is a detail of the base portion of the device shown in Fig. 4 and Fig. 8;

Fig. 8 is a plan view of the gimbal ring structure shown in Fig. 4;

Fig. 9 is a vertical elevational view of still another modification of the invention;

Fig. 10 is the same view as Fig. 9 but with the object 90 degrees displaced therefrom;

Fig. 11 shows a top plan view of still another form of the invention; and

Fig. 12 shows a vertical elevational view of a form of Fig. 11; and

Fig. 13 shows an elevational or detailed view along the line 13—13 of Fig. 11.

In the art of vacuum cleaners and their manufacture, construction, and organization, the principal objects to be achieved in any form thereof are ease of maneuverability of the cleaning device and its consequent transportation from one place to another in the home of the user. Various forms have been attempted heretofore such as mounting the cleaner assembly on wheels or trucks to permit its being moved about, but these devices lack ease of transportation from one floor level to another; that is, movement from the first floor to the second floor and vice versa, of the home. Other types of devices have been constructed and arranged that permit the unit to remain stationary either in a vertical or in a horizontal position, and it is necessary in such devices for the operator to expend considerable energy in stooping to pick up the cleaner by handles that are closely fitted to the body of the device and thence transport it from one place to another. One of the principal disadvantages of each of the foregoing structures is that either the entire cleaner must be maneuvered across the floor or the cleaner must be literally dragged across the floor on runners or skids where the device is not equipped with trucks or casters. Each of these devices has, of course, its inherent deficiencies that do not permit the

cleaner to be pulled about easily without fear of the suction creating means and its attached filter being tipped over and parts perhaps becoming disassembled and filling the room with disagreeable grime, grit, dust and dirt. To the end that each of the foregoing difficulties may be overcome and the previous constructions improved upon, the instant invention has been conceived, the principal object of which is to facilitate maneuverability and to maintain the entire cleaner unit in a substantially vertical position to which it will return irrespective of the amount to which it has been drawn from any given vertical position. The immediately described function enables the operator to grasp the carrying means without bending or exerting himself. Advantage is taken of the usually greater weight of the suction creating means as compared with the balance of the cleaner, and in so disposing it within the base portion of the structure thereby utilizing same as a counterweight, the entire assembly will maintain and return to the vertical position when the tension has been released by the operator from the cleaning tool that is connected to the cleaner.

The above objects are achieved in the following described structure in which Fig. 1 denotes generally the base portion and the housing for the motor and fan unit of the cleaner. Attention is particularly invited to the fact that the base portion is not exactly spherical, but is better described as an oblate spheroid. Surmounting the base portion of the cleaner is the tank or tubular portion 2 that houses the filter and a screen or mesh organization to inhibit the close adherence of the filter to the walls of the tank or tubular portion 2.

Disposed at the top of the tubular portion 2 is a handle mechanism 3 having a ring portion 3*a* which is preferably of a rubber or soft composition material that entirely circumscribes the upper portion of the cleaner. Other forms of handles, could, of course, be employed, but it is preferable that the handle entirely circumscribe the cleaner so as to prevent the possibility of breakage to either the cleaner or damage to articles of furniture and the interior trim of a home and to enable the operator to take hold of this handle from any position. The handle 3 is secured to a ring 3*b* that is part of the cap structure 7 which by means of an interrupted thread or a pin and slot, or bayonet type of connection is locked firmly to the upper portion of the tank or tubular part 2. The upper end of 2 is enlarged slightly as at 25 to increase the stock thereof to facilitate manufacture and assembly of and locking of the parts in a firmer relationship. The ultimate object to be achieved is permanence of lock and ease of removability in the event of such necessity as will be hereinafter set forth.

Superimposed on the cover portion 7 is the connector or adaptor by means of which a hose 4 is attached thereto and which will permit relative rotating movement between the hose portion 4 and the cover of the cleaner top. To this end there is provided a tubular extension 6 centrally disposed exteriorly of the cover 7 and in which is swivelly mounted a tube portion 8 which has a collar 8*a* integral therewith which rests upon the upper portion of extension 6, the entire assembly being maintained in position by means of threaded collar 5 which collar is threaded to the end of extension 6. It is, therefore, evident that tube portion 8 will be permitted a relative rotation with respect to extension 6 and thereby the entire cleaner. Attention is invited to the fact that the hose 4 leads to an appropriate nozzle or floor tool of the kind preferably set forth and organized in application Serial Number 62,833, filed February 7, 1936, or any other form of floor tool may be employed as necessity requires and demands.

Disposed within the tank portion of tubular part 2 is mounted the filter 22. In order to prevent the close adherence of filter 22 to the walls of the tank or tubular portion there is interposed between the filter and the tube a wire mesh 21 or coarse screen so as to permit the passage of air from the filter to the suction creating means. It is intended to employ a paper filter, paper of which is made in accordance with that defined and set forth in United States Reissue Letters Patent No. 18,797. A fabric bag of any well known construction may also be employed if desired. In order that the passage of air may be facilitated the screen is inserted between the filter and the wall of the tubular or tank portion 2.

Disposed in the upper part of the tubular or tank portion 2 there is a ring 24 that presses firmly within the tubular portion 2 and holds the filter and wire mesh firmly to the upper part thereof. The filter is preferably folded over the top part of the wire mesh and the ring firmly engaging the upper part thereof so as to prevent any possibility of the filter's becoming disengaged or in any way loosened such that a clear passage for the combined dirt and air stream will be maintained from the inlet 8 into the expansion chamber provided by the tube 2. A further purpose and object of the ring 24 is to prevent any possibility of dust or dirt leaking or getting past the filter and becoming lodged between the exterior of the filter and the walls of the tank portion 2 and thereby inhibiting the free flow of the clean air as it passes down into the suction creating means. The ring construction may be dispensed with and the upper end of the bag led directly to tube 8 or extension 6 and directly connected thereto by appropriate coupling means of the type illustrated in Reissue United States Letters Patent No. 18,962.

At the base of the tank portion 2 means are provided whereby passage of air will be facilitated into the suction creating means. To that end there is a separator 26 provided which is preferably in the form of a wire basket-like construction that not only affords the means of separation but also will support the base of the filter unit 22 and inhibit its possible rupture and the dirt's falling into the suction creating means. This element 26 may be loosely fitted therein such that it may be easily removed in the event of necessity.

Attention is at this point invited to the fact that tank or tubular portion 2 may be secured to the upper part of the base 1 by means of a riveted type of joint but inasmuch as it is intended to make the base portion and the part 2 of some light weight metallic construction, the parts are preferably welded together at the point of juncture 19. Of course, other materials may be employed such as a composition rubber and fabric, fiber, or molded construction and then joined together at 19 by the process of flanging and riveting or any other suitable or desirable means as material, occasion, and necessity demand.

Disposed within the base portion and housing

1 is a combination power unit and suction creating means. These structures consist of a prime mover, preferably in the form of an electrical motor 11 which is disposed in the base and mounted in such a manner that it will be placed as near to the bottom of the base portion 1 as it is physically and mechanically possible to do so. Disposed above this motor is a fan chamber 14, the fan not being shown but which may be of the type set forth and described in United States Letters Patent No. 1,757,239, or any other desirable form, and the specific construction not being material to the instant invention. The motor 11 is flanged as at 13 and has the motor secured to the fan housing by means of screws 16—16, 17 that are especially threaded thereto. The fan chamber at its upper portion is contoured to the same shape, form and dimension as that of the upper part of the base 1 and has a walled portion 20 that extends up into the tank or tubular portion 2 which provides means upon which basket construction 26 may rest and it is preferable and desirable that the fan chamber be secured to the upper part of the base portion 1 as by welding although if desired it may be riveted or bolted thereto as occasion and necessity and economy demand. An exhaust is provided through the fan chamber by means of the opening 15 which may be screened and adapted such that a hose may be connected thereto and the device converted into a blower for such cleaning operations as require the services of a blower mechanism.

Attention at this point is invited to the fact that the upper part of the base portion 1 is separable therefrom and to that end the upper part of 1 is expanded as at 1b. Part 12 of the base and housing is the base proper and is fitted into the upper portion of the base and housing 1 and retained in these either by a friction fit or by pin and slot, interrupted thread or a bayonet type of connection. It is particularly desirable that the type of connection or locking means used will enable the ready disassembly of portion 12 from the base 1. In order to assist in the counterbalancing of the entire structure should the physical properties thereof be such that the weight of the motor will be insufficient to restore the machine to a vertical position, an auxiliary counterbalancing weight 10 is placed in the extreme bottom portion of the base as defined by depression 9. The principal object of placing the counterweight there is to dispose it as closely to the floor as possible. A foot piece 1a preferably of a rubber or other soft composition material is exteriorly fitted around the depressed portion 9 such that direct contact between the base and the supporting floor will be inhibited although if some other material besides a metal is used for the construction of the base 1 and its bottom half 12, the foot piece 1a may be dispensed with in the event that such base 12 is made and constructed of a soft pliable material.

During operation the hose and floor tool device such as generally described above is attached to the tubular portion 8 and the operator can, therefore, easily maneuver the floor tool about the surface undergoing cleaning treatment, whether that surface be a rug on the floor, articles of furniture, or drapery material on the walls or any surface, such, for instance, as may be disposed upon the ceiling of a room without the necessity of transporting and moving the suction creating and filter device of the cleaner about the room. The cleaner can be very easily stationed in substantially the geometric center of the room and inasmuch as the cleaner height will be an appreciate amount, should the hose provided not be of sufficient length to reach all portions, the cleaner body may be tipped and when tension is removed from the hose the cleaner will return by virtue of its being counterbalanced, to vertical position and thereby permit its being easily picked up by the handle 3 and transported about the home as occasion and necessity demand.

Another principal feature of the device is that it can be constructed and organized in such a fashion that it will resemble a piece of furniture and it will not be necessary to provide an auxiliary storage space therefor as it is the intention of the inventors that it shall be made in such a form and so attractive in finish as to become part of the furnishing of a room.

The foregoing described structure being the preferred embodiment thereof in which the base portion 1 thereof rests upon the floor may not be considered by some individuals to afford the desired stability and to that end the constructions set forth in Figs. 4 to 13 inclusive have been provided. The devices as set forth in Figs. 4 to 8 show the general assembly disposed upon a form of a gimbal base and in which the parts 27, 28, 29, 30, and 31 are similar to the corresponding structures of 1, 2, 3a, 4, 5, and 6, etc., of the previously described device. The cleaner proper defined by these numbers is intended to be identical in structure and, therefore, no detailed description thereof is considered necessary. The base portion that is provided for the disclosure of Figs. 4 to 8 consists of a ring-shaped base 34 that is made up in as light a form as is possible by hollowing out, etc., and has diametrically disposed uprights 32 integral with the base. Into this base is fitted a gimbal ring 33. The gimbal ring 33 is pivoted to the uprights by means of pivots 36 that are adapted to be journalled in appropriate bearings mounted in the upper part of the uprights 32. The motor and suction creating means housing is then disposed within the gimbal ring 33 and is pivoted inside the gimbal ring on pins 37 that are displaced 90 degrees from pivots 36. No particular means has been described and set forth how the pins 37 are arranged in the housing 27, but this is merely a mechanical detail and is considered to be of such form as is clearly within the knowledge and skill of the ordinary mechanic or machine designer. The same is true for the particular bearing organization assembly by which pins or pivots 36 are journalled into the uprights 32.

The above structure discloses and sets forth a base arrangement which is slightly different from that of the previous figures although the same form may be used. It is preferable, however, in this particular construction that the base portion instead of becoming a pure oblate spheroid be extended to form at the center portion thereof a cylinder with the ends in the form of an oblate.

The above construction set forth in Figs. 4 to 8 clearly enables the cleaner to be tipped from the vertical by tension on the hose 30 by means of pivoting on the pivot pins 36 and 37. In order to permit the wider range of tipping without the tendency of the cleaner to swivel on the base 34 the gimbal rings 33 may be, of course, multiplied indefinitely until a universal tipping of the cleaner is possible. In view of the fact that the motor is suspended in this base as low as it is

possible to do so. and that this is intended to always restore the cleaner to a vertical position, it is obvious that the pivot pins at **36** and **37** will permit of that function and should the weight of the motor be insufficient so as not to counterbalance the upper part of the cleaner the auxiliary counterweight such as described in Fig. 2 may, of course, be supplied in the base portion **27**.

Another form and modification of the means for suspending the base portion is set forth in Figs. 9 and 10, parts **39**, **40**, **42**, **43**, **44**, and **45** being similar in construction, purpose and organization as parts **1** to **7** inclusive of the preferred embodiment. As a means of suspending the base portions **39** and **40** above the floor, a pair of rockers **46** are provided that are rigidly and permanently secured thereto. They may be constructed and arranged such that the ends at **47** may be removed from the base to permit the ready disassembly thereof. It is apparent, therefore that if the hose **45** pulls the cleaner such that the tipping occurs in any plane other than that parallel to the displacement of the rockers the entire assembly will pivot in an appropriate manner such that the cleaner will assume such a position that the tipping will take place in the direction of tension and in the plane parallel to the rockers.

A still further modification of the means for suspending the base of the cleaner is set forth in Figs. 11, 12, and 13. Parts **48** through **55** are of course, identical in purpose, construction, and function as parts **1** to **7** inclusive of Fig. 1. The base portion **56** of this modification consists of the foot piece or ring **57** about which at spaced points are legs or struts **58** that are preferably arched as shown and disclosed in Fig. 12. These legs, in turn, are integrated to ring **59** which is preferably in the form of a channel ring as particularly set forth in Fig. 13. A pair of casters or rollers **60** suitably bearinged and disposed upon pins or shafts **62** that are secured to the housing **48** in any appropriate and well known manner, are diametrically disposed with respect to the base portion **48**. Each of the rollers **60** is, of course, journalled on the shaft **62** and the general intention of the channel ring **59** in combination with the rollers **60** is to obtain the advantages of the gimbal ring and obviate the necessity of providing a multiplicity of rings in an attempt to obtain a universal tipping of the cleaner construction and not require that the cleaner organization be tipped by means of pivoting part of the base element generally denoted as **56** on any more or less rigid bar element.

The operation of this device is such that as the hose **54** is tautened by the operator the cleaner will tip about the axis through the rubber, and as the operator walks about the room keeping the hose **54** taut, the cleaner itself will adapt itself to the direction of tension by revolving within the channel ring **49** on the rollers **60** such that irrespective of the direction in which the tension is applied with respect to the diametrical axis through pins or shafts **62** the tension applied to the hose will always be at right angles to the aforementioned diametric axis.

Attention is further invited to the fact that in the modification the lower part of **27** in Figs. 4 and 7, parts **40** and **49** of Figs. 9 to 13 in reality constitute a cover means inasmuch as other base means are provided. For purposes of this application the term base is intended to mean part **12** of Figs. 1 to 3, and parts **33** and **34** of Figs. 4 to 7, parts **46** of Figs. 9 and 10, and part **56** of Figs. 11 and 12.

Power lead or conductor cord is introduced into the base structures through appropriate "plug-ins" for driving the motor and any other power consuming devices as may be applied thereto. Details of such devices are not disclosed and in view of the many well known forms thereof, selection of the appropriate design is within the abilities of a skilled mechanic or designer.

It is thought that the above so fully sets forth and reveals the gist of the invention that anyone skilled in the art to which it pertains can, by applying the principles described and set forth above to any desired type of construction, reproduce and produce the inventions described and set forth.

That which is considered new, novel, and useful and which it is intended to protect by Letters Patent of the United States is as follows.

We claim:

1. In a vacuum cleaner, a housing for a motor and suction means, means to support said housing including a foot piece, and means associated with said housing and said supporting means to enable said housing to pivot in any substantially horizontal direction on said foot piece.

2. In a vacuum cleaner, a housing for a motor and a suction producing device, and foot means operatively connected to said housing so constructed and arranged that said housing may swing universally with respect to the floor.

3. A vacuum cleaner, including means to retain a primary motor and suction creating device, a filter housing associated with said means, and a foot piece associated with said means enabling a swinging motion of said means and filter housing with respect to the floor, said filter housing being counterbalanced to maintain same in a vertical position.

4. In a vacuum cleaner, a housing for a motor and fan assembly, a ring-like structure surrounding said housing, means to tiltably dispose said housing in said ring, and means adapted to rest upon a floor to support said ring about said housing.

5. In a vacuum cleaner support, a floor piece, a cleaner supporting ring mounted above and spaced from said foot piece, and means associated with said ring and cleaner whereby said cleaner may tilt in said ring.

6. In a vacuum cleaner support as defined in claim 5, in which said ring comprises a channel shaped member, said cleaner having means mounted in said channel on which said cleaner tilts and in which the vertical axis of said cleaner and the axis of said ring are coincident such that said cleaner may rotate within said ring.

7. In a vacuum cleaner, a housing for a motor and suction creating means, means supporting said housing for tilting motion with respect to the floor in substantially horizontal directions, said means including a foot piece and means interposed between said housing and said foot piece whereby said housing may be tilted in any of said horizontal directions on said base.

DEWEY M. DOW.
ALFRED F. DEES.
DONALD L. BOYD.