April 11, 1967 J. D. WELSH ETAL 3,313,454

DISPENSING DEVICE

Filed July 14, 1965

FIG. 2.

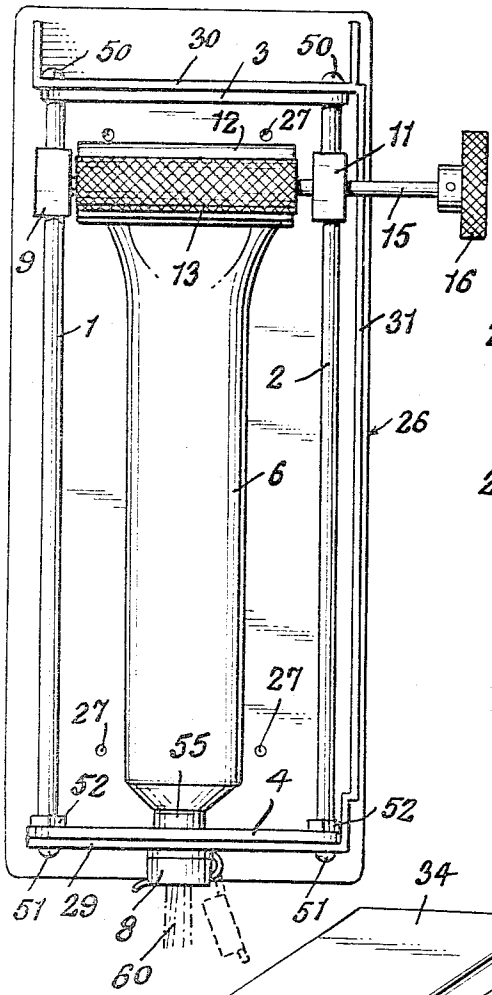


FIG. 3.

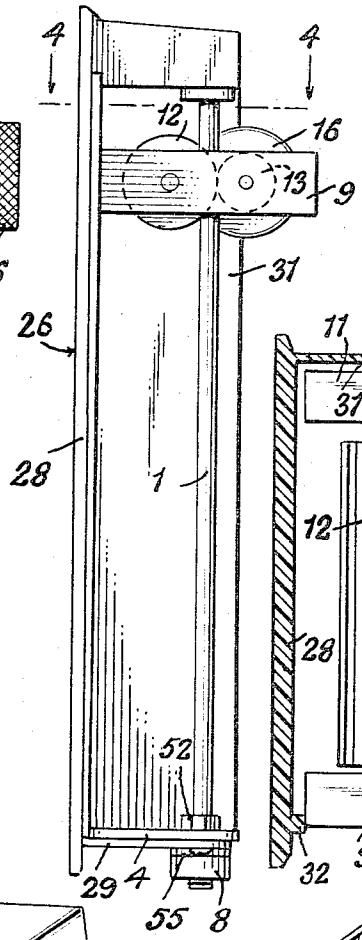


FIG. 1.

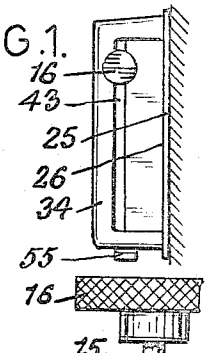


FIG. 4.

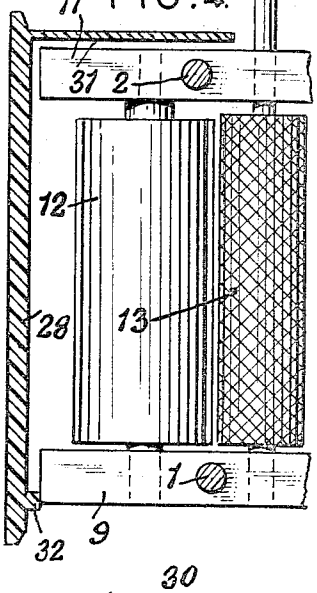


FIG. 5.

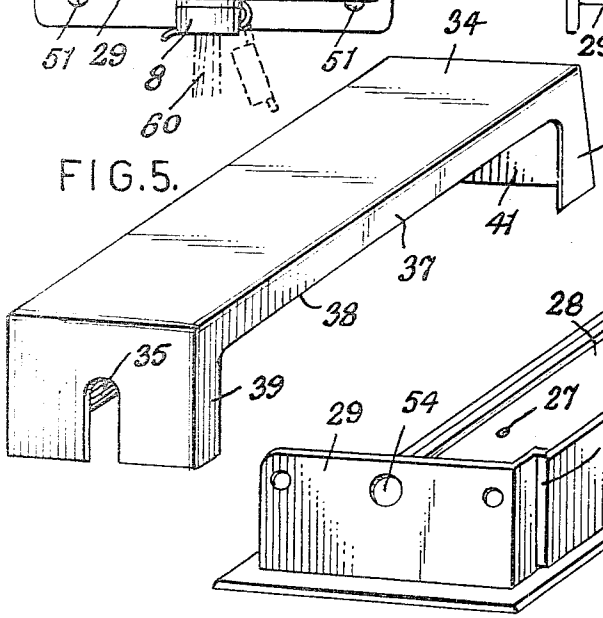


FIG. 6.




INVENTORS
JOHN J. HRESL
JAMES D. WELSH

BY Alexander, Sweeney & Ware
Attorney

United States Patent Office 3,313,454 Patented Apr. 11, 1967



3,313,454

# DISPENSING DEVICE

James D. Welsh, 84 Sampsondale Ave., and John J. Kresl, 86 Sampsondale Ave., both of West Haverstraw, N.Y. 10993

Filed July 14, 1965, Ser. No. 471,929
1 Claim. (Cl. 222—102)

This invention relates to a device for dispensing the contents of collapsible tubes such as are used for example, for containing tooth paste, shaving cream and other materials of a pasty consistency.

It is an object of the invention to provide a device of this kind which can be enclosed in a suitable attractive casing and mounted on the wall of a bathroom or other location; in which the collapsible tube is placed with its neck or outlet end disposed downwardly and which, by the turn of a knob, will be caused to progressively compress the tube and expel its contents in regulatable quantities.

More particularly, the invention contemplates the provision of a casing having walls between which guide rods are mounted, and a roller-bearing carriage slidably mounted on the rods, with one of the rollers borne by said carriage having an extended shaft bearing a knob. The tube to be evacuated is mounted uprightly by its engagement with a nipple fitted at the bottom of the casing and by the turning of the knob the tube is compressed between the rollers and its contents expelled in regulatable quantities.

With these and other objects to be hereinafter set forth in view, I have devised the arrangement of parts to be described and more particularly pointed out in the claims appended hereto.

In the accompanying drawing, wherein an illustrative embodiment of the invention is disclosed,

FIG. 1 is a side elevational view, in a small scale, of a tube-dispensing device constructed in accordance with the invention;

FIG. 2 is a front elevational view of the device with the cover of the casing removed;

FIG. 3 is a side elevational view of the structure of FIG. 2 as seen from the left of FIG. 2;

FIG. 4 is a sectional view, taken substantially on the line 4—4 of FIG. 3, looking in the direction of the arrows;

FIG. 5 is a perspective view of the base member of the casing, and

FIG. 6 is a perspective view of the cover member of the casing on a slightly smaller scale.

The dispensing mechanism is contained within a casing or housing, which can, if desired, be composed of a suitable plastic material, and which is adapted to be fastened to a wall or other support 25 as shown in FIG. 1.

The casing is composed of two parts, the base portion thereof being indicated at 26, said base portion being adapted for mounting flatly against the wall 25 by means of screws or other similar fastening elements extended through holes 27 formed through the back plate 28 of the base member.

The base member 26 includes end walls indicated respectively at 29 and 30, such end walls being connected by a single side wall 31, there being no opposite side wall but the side of the base from which a side wall is absent being reinforced or stiffened by means of a longitudinal rib shown at 32, said rib extending from the end wall 29 to the end wall 30.

The side wall 31 is provided with stepped parts 33 which provide for a flush fit by the cover member 34 which slidably engages with the base member. The cover member 34, which fits over the base member substantially as shown in FIG. 1, includes an imperforate



side wall 35, the opposite side wall 37 being notched or cut away substantially as shown at 38. This enables the end parts 39 and 40 of the side wall 37 to fit in the stepped parts 33 of the base member and permits the sidewall 37 to thus lie flush with the side wall 31 of the base member. The notch or cut-out 38 is of such depth that the edge 41 of the cover member is spaced away from the edge 42 of the side wall 31 so that the edges 41 and 42 form an elongated slot 43 between them as shown in FIG. 1.

The improved dispensing device contained in the casing includes a frame composed of a pair of spaced, vertical, parallel rods 1 and 2 connected at the top by means of a cross plate 3 and connected at the bottom by a somewhat similar cross plate 4. The upper cross plate 3 is attached to the end wall 30 of the base member by means of screws 50 which pass through the end wall 30 and enter the rods 1 and 2 thereby attaching the rods to the cross plate while attaching the cross plate to the end wall 30.

The cross plate 4 at the lower end of the frame is attached to the end wall 29 by screws 51 which pass through the end wall 29 and through the cross plate 4 and enter the rods 1 and 2. Nuts 52 are provided on the rods 1 and 2 to secure a clamping effect.

Extending through the lower cross plate 4 and through an opening 54 provided in the end wall 29 is a tubular nipple 55 for the threadable reception of the neck of a collapsible tube 6 such as is used for containing tooth paste, shaving cream and other materials of a pasty consistency.

The tube 6 when fitted in the dispensing position shown in FIG. 2 has its neck fitted in the nipple 55 and the nipple has its lower end directed downwardly below the wall 29 in dispensing position. The portion of the nipple 55 that extends below the wall 29 receives a closure cap 8 which can be hingedly attached to the nipple and can be swung away as shown in dotted lines in FIG. 2. As an alternative, a thread-on closure cap might be used. The tube 6 is thus held in a vertical position and against rising movement.

Vertically slidable on the rods 1 and 2 is a roller carriage which consists of blocks indicated respectively at 9 and 11 connected by shafts carrying rollers 12 and 13. The roller 12 is preferably covered by a soft and compressible material such as rubber 14, and the roller 13 can be composed of metal and can be provided with a roughened or knurled peripheral surface for frictionally engaging the surface of the tube 6 and securing traction against the same to thereby move the roller carriage downwardly during the tube-compressing action. The slot 43 permits any required up and down movement of the shaft 15.

The shaft 15 carries the roller 13 and on which the roller is pinned and said shaft is provided with an extended part which projects through the slot 43. Said extended part of the shaft carries a knob 16, said knob being manually rotated to thereby turn the roller 13.

In the operation of the device, the tube 6 is placed within the frame, with the neck of the tube inserted in the nipple 55. The placement of the tube in place as above described is done while the roller carriage is in an elevated position.

The spacing between the rollers 12 and 13 is such that upon the descent of the roller carriage, the flattened end of the tube 6 will enter between the rollers, and when the roller 13 is rotated by turning the knob 16, the contents 60 of the tube 6 will be squeezed out of and will flow from the nipple to be captured on a brush or hand placed below the nipple. The carriage will descend both by the action of gravity and by the propulsive movement of the manually rotated roller 13 having it knurled sur-

face frictionally engaging against the surface of the tube and obtaining traction thereon. Thus, by merely turning the knob **16**, the contents of the tube can be expelled in desired quantities until the entire tube has been flattened and all of the contents thereof are exhausted.

While the cover member **34** of the casing is shown as a separated element from the base member, the cover member can, if desired, be hingedly attached to the base member.

Having thus described a single embodiment of the invention, it is obvious that the same is not to be restricted thereto, but is broad enough to cover all structures coming within the scope of the annexed claim.

What we claim is:

A device for dispensing the contents of a collapsible tube comprising, a casing having a base member provided with a side wall connected to fixed and spaced end walls, a frame consisting of a pair of parallel guide rods connected at their ends by cross plates, the cross plates being flatly disposed against and respectively attached to the end walls, a cover member removably fitted and secured over the base member and forming an enclosure therewith, said cover member having a side wall provided with a cut-away portion defining a slot between one of its edges and an edge of the side wall on the base member in immediate confronting relationship, a roller carriage slidable on the rods, rollers in side-by-side relation and between which a collapsible tube is compressed, one of the rollers having a shaft extending through the slot and movable up or down therein, and means extending through one of the end walls of the casing for supporting a collapsible tube in an upright position to enable it to be compressed between the rollers, the carriage being movable down the rods with frictional contact of the rollers against the tube, there being no positive drive means connecting the rollers.




**References Cited by the Examiner**

UNITED STATES PATENTS

| | | | |
|---|---|---|---|
| 1,784,752 | 12/1930 | Ries | 222—102 |
| 1,845,291 | 2/1932 | Koontz | 222—102 |
| 1,975,915 | 10/1934 | Bannister | 222—102 |
| 1,989,713 | 2/1935 | Smith et al. | 222—102 X |
| 2,550,537 | 4/1951 | Derrick | 222—102 |
| 2,578,472 | 12/1951 | Gunnarson | 222—102 |
| 2,670,876 | 3/1954 | Clouse | 222—102 |



ROBERT B. REEVES, *Primary Examiner.*

N. L. STACK, *Assistant Examiner.*