No. 693,933. Patented Feb. 25, 1902.

J. R. WEBB.

MATCH SAFE.

(Application filed Aug. 19, 1901.)

(No Model.)

Fig. 1.

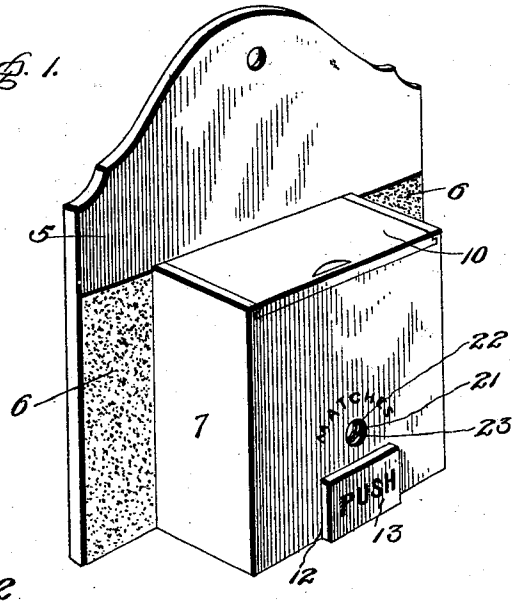

Fig. 2.

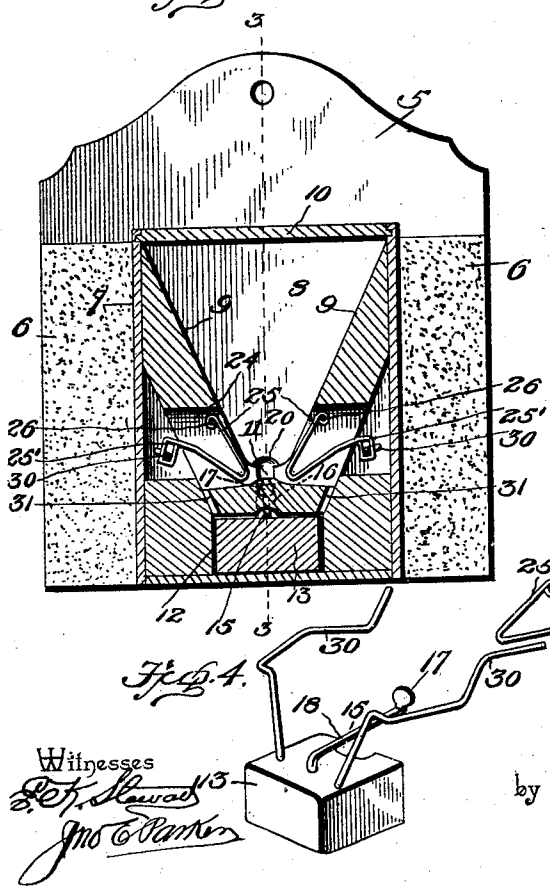

Fig. 3.

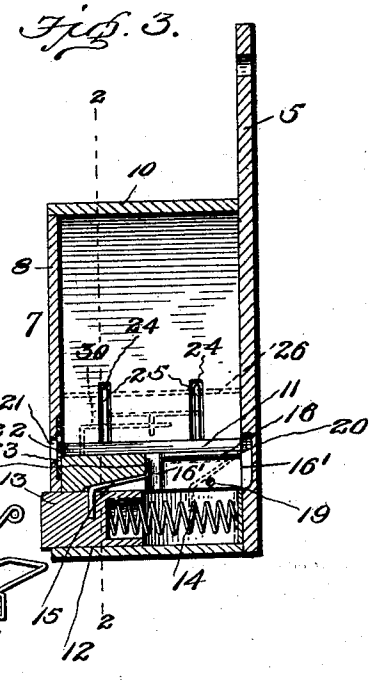

Fig. 4.

Witnesses

E. F. Stewart

Jno. C. Parker

J. R. Webb Inventor

by C. A. Snow & Co

Attorneys

THE NORRIS PETERS CO., PHOTO-LITHO., WASHINGTON, D. C.

UNITED STATES PATENT OFFICE.

JOHN R. WEBB, OF NEWPORT, WEST VIRGINIA.

MATCH-SAFE.

SPECIFICATION forming part of Letters Patent No. 693,933, dated February 25, 1902.

Application filed August 19, 1901. Serial No. 72,542. (No model.)

To all whom it may concern:

Be it known that I, JOHN R. WEBB, a citizen of the United States, residing at Newport, in the county of Wood and State of West Virginia, have invented a new and useful Match-Safe, of which the following is a specification.

My invention relates to improvements in match-safes of that class in which a single match is ejected from the magazine at each operation of the device.

An object of the invention is to provide an improved construction by which the matches may be safely delivered without danger of igniting; and a further object is to reduce the number of working parts of the apparatus in order to render it simple and inexpensive in construction.

With these and other objects in view the invention consists in the novel construction and combination of parts referred to hereinafter, shown in the accompanying drawings, and particularly pointed out in the appended claims.

In the accompanying drawings, Figure 1 is a perspective view of a match-safe constructed and arranged in accordance with my invention. Fig. 2 is a transverse sectional elevation of the same on the line 2 2, Fig. 3. Fig. 3 is a longitudinal sectional elevation of the match-safe on the line 3 3, Fig. 2; and Fig. 4 is a perspective view illustrating certain details of construction more particularly referred to hereinafter.

Referring to the drawings, 5 represents a suitable base-board, on which the magazine and its connected parts are secured, frictional striking-surfaces 6, of sandpaper or some equivalent material, being preferably placed on the base at each side of the magazine.

7 indicates a suitable casing, in which is contained a magazine 8, having converging side walls 9, the wider ends of which are at the top and are covered by the sliding lid 10, which may be removed from time to time in order to place a fresh supply of matches therein. At the lower central portion of the magazine is a groove 11 of a width and depth sufficient for the reception of a single match, and as the match from this groove is ejected the remaining matches will fall, the groove being constantly supplied until the magazine is empty. Immediately under the magazine is a guideway 12 for the reception of a slidable finger-block 13, the forward end of which projects out slightly beyond the front of the casing and in convenient position for operation by the thumb or finger. This block is normally held in the forward position by a coiled compression-spring 14, extending between its rear face and the rear wall of the casing, excessive outward movement being prevented by the contact of a finger 15, carried by the block, with the front wall of a vertical slot 16, which extends through the lower portion of the magazine from the match-groove to the lower guideway 12. The groove 16 extends for a distance equal to about one-half of the length of the match-groove and at each end is provided with enlarged vertical openings 16′, the remainder of the slot for its full length being of a width less than the diameter of the head 17 of the finger 15. The finger 15 is formed of a single strip of spring metal, having a vertically-extended portion terminating in a head 17 of a diameter about equal to the diameter of an ordinary match and a substantially horizontal portion 18, secured at its forward end to the block 13. Extending across the slot 16, near the lower portion thereof and nearly midway of its length, is a pin 19, the upper surface of said pin being on a level slightly below the finger 15, so that when the said finger is forced to the rear by the operation of the block 13 it will be elevated by said pin, the vertical movement of the finger increasing gradually until said finger has reached the enlarged portion 16′ at the rear end of the slot 16, at which point the finger will project above the slot and into the match-groove 11, there coming into contact with the rear end of the match contained within the groove. In order to insure positive operation and prevent contact of the finger with any portion of the match except its extreme end, the rear portion of the casing is recessed at 20, at which point the rear enlargement 16′ of the slot is situated, so that the finger cannot enter the magazine until after it has slightly passed the rear wall of same. With the finger in the elevated position and its head 17 in the groove 11 the release of pressure on the block 13 will enable the head 17 to travel along said groove, forcing the match ahead of it, until the finger has reached

the forward enlargement 16′ of the slot, when it will immediately spring down and will at the same time engage with the end wall of the slot and prevent further outward movement of the finger-block under the influence of the spring 14.

At a point in the front of the casing immediately in line with the groove 11 is a delivery-opening 21, through which the head of the match is forced by the finger 15, the match projecting for about one-half of its length and in convenient position to be caught by the fingers. The opening 21 has rounded edges and is surrounded, and its available diameter is slightly reduced, by a perforated plate 22, of rubber, leather, or similar yielding material, which will prevent the ignition of the match as its head is forced out through the opening. The yielding plate is preferably provided with one or more radial slots 23, which will permit of the enlargement of the opening and allow the passage of two matches should they stick together or accidentally be caught by the ejection-finger 15.

In each of the walls 9 of the magazine and near the lower portion thereof are slots 24, in which are pivoted fingers 25, said fingers being arranged in pairs and having their outer ends at points outside the walls of the magazine connected and provided with the central loop 25′, as shown more clearly in Fig. 4. These fingers, for convenience, may be formed of a single piece of wire bent centrally to form a loop 25′ and thence at each end bent at an angle of a degree corresponding to the angular inclination of the walls of the magazine, the extreme ends of the wire being bent to form pivotal loops through which are passed pins 26. These fingers are adapted to move from and toward each other within the magazine at a point immediately above the groove 11, and when so moved toward each other will engage with and partly lift all of the matches in the magazine save the one contained in said groove.

To the block 13 are secured operating-cams 30 in the form of suitably-bent wire sections, having their free ends passing through the loops 25′, the cams being partly guided in slots 31 below the magazine and being so shaped that on the rearward movement of the block 13 they will cause the lifting-fingers 25 to be moved toward each other to separate the matches from the one to be ejected, and will continue to hold said matches until after the ejecting-finger has started on its return movement and partly eject the match from the groove. After the match has been partly ejected the cams will separate the fingers and permit the matches in the magazine to fall, a fresh match being thus placed in the groove 11 in readiness for the next operation.

The device may be modified in a variety of ways without departing from my invention, and the magazine and its casing may be made of any suitable material and ornamented in any desired manner or may be supplied with advertising or other matter, as desired.

Having thus described my invention, what I claim is—

1. A match-safe having a tapering magazine provided at its lower portion with a groove for the reception of a single match, a delivery-finger, means for moving said finger into the groove, means for effecting the movement of said finger for a portion of the length of such groove to project the end of the match beyond the wall of the magazine, and means for moving the finger out of said groove after the match has been projected.

2. A match-safe having a tapering magazine provided at its lower end with a groove for the reception of a single match, an ejecting-finger adapted to be moved vertically to enter said groove through a slot provided in the lower wall or bottom of the magazine, and means for raising and lowering said finger at each operation.

3. In a device of the class specified, a magazine having a match-receiving groove and provided at its bottom with a slot of a length less than the groove, said slot having enlarged end portions and a contracted central portion, a finger adapted to enter said groove through the enlarged portion at one end of the slot and to leave the same through the enlarged portion at the opposite end of said slot, and means for raising and lowering said finger into and out of operative position.

4. In a device of the class specified, a magazine having a match-receiving groove and provided at its bottom with a slot having end enlargements, a transverse pin extending across said slot near the lower portion thereof, a finger-block, an ejecting-finger carried by said block and adapted to enter the match-receiving groove through one of the said end enlargements and eject the match from said groove and to leave said groove through the enlargement at the opposite end of the slot, and means for returning said block to its initial position.

5. In a device of the class specified, a tapering magazine having a bottom discharge-groove, means for ejecting a match from said groove and oppositely-disposed fingers arranged in the walls of the magazine at a point immediately above the groove, with means for moving said fingers toward and from each other to engage and lift all of the matches except the one to be discharged.

6. In a device of the class specified, the combination of the magazine having tapering walls and provided at its bottom with a match-receiving groove and a vertical slot of a length less than the groove, oppositely-disposed fingers arranged above the groove, means for moving said fingers toward and from each other to engage and lift all the matches except the one to be discharged, and a match-ejecting finger adapted to be operated simultaneously with the movement of said fingers.

7. In a device of the class specified, a tapering magazine having a bottom discharge-groove, oppositely-disposed fingers arranged in the walls of the magazine at a point immediately above the groove, a push-block, a spring ejecting-finger carried by said block and normally out of alinement with the groove, means for forcing the finger into the groove when the block is operated, and cams carried by said push-block for operative engagement with said fingers.

8. In a device of the class specified, a tapering magazine having a bottom discharge-groove, fingers arranged in the opposite walls of the magazine at a point immediately above the bottom, said fingers being formed each of a piece of wire bent to form a central engaging loop and angular end fingers terminating in pivot-eyes, a push-block, cams carried thereby for engagement with said loops, and an ejecting-finger also carried by said block and adapted to enter said bottom discharge-groove and eject a match therefrom.

In testimony that I claim the foregoing as my own I have hereto affixed my signature in the presence of two witnesses.

JOHN R. WEBB.

Witnesses:
J. F. HEATHERLY,
S. N. BLACK.