US00D861178S

(12) **United States Design Patent** (10) **Patent No.: US D861,178 S**
Emery et al. (45) **Date of Patent: ** Sep. 24, 2019**

(54) **ULTRASOUND THERAPEUTIC TREATMENT TRANSDUCER**

(71) Applicant: **Ulthera, Inc.**, Mesa, AZ (US)

(72) Inventors: **Charles D. Emery**, Gilbert, AZ (US); **Brian Lee Prout**, Gilbert, AZ (US); **Dwayne E. Quatier**, Chandler, AZ (US); **Alexander Michael Diener**, Seattle, WA (US); **Spencer Michael Denton**, Seattle, WA (US); **Kristin Marie Will**, Seattle, WA (US); **Luke David Springer**, Seattle, WA (US); **Trent R. Wetherbee**, Spokane Valley, WA (US); **Jered L. Singleton**, Bainbridge Island, WA (US); **Peter J. Heinrich**, Auburn, WA (US); **Cameron Andrew Harder**, San Francisco, CA (US); **John R. Murkowski**, Seattle, WA (US)

(73) Assignee: **Ulthera, Inc.**, Mesa, AZ (US)

(**) Term: **15 Years**

(21) Appl. No.: **29/636,009**

(22) Filed: **Feb. 5, 2018**

(51) **LOC (12) Cl.** **24-02**

(52) **U.S. Cl.**
USPC **D24/187**

(58) **Field of Classification Search**
USPC D24/110, 137, 144, 147, 133, 186, 187, D24/227, 231; D28/7; D10/60, 78, 80
(Continued)

(56) **References Cited**

U.S. PATENT DOCUMENTS

D506,260 S * 6/2005 Ryan D14/218
D566,284 S * 4/2008 Kitayama D10/60
(Continued)

Primary Examiner — Susan Bennett Hattan
Assistant Examiner — Omeed Agilee

(74) *Attorney, Agent, or Firm* — Knobbe Martens Olson & Bear LLP

(57) **CLAIM**

The ornamental design for an ultrasound therapeutic treatment transducer, as shown and described.

DESCRIPTION

FIG. **1** is a top left rear perspective view of a first embodiment of an ultrasound therapeutic treatment transducer embodying the new design.
FIG. **2** is a bottom right front perspective view thereof.
FIG. **3** is a top view thereof.
FIG. **4** is a bottom view.
FIG. **5** is a rear view.
FIG. **6** is a front view.
FIG. **7** is a left view.
FIG. **8** is a right view.
FIG. **9** is a top left rear perspective view of a second embodiment of an ultrasound therapeutic treatment transducer embodying the new design.
FIG. **10** is a bottom right front perspective view thereof.
FIG. **11** is a top view thereof.
FIG. **12** is a bottom view.
FIG. **13** is a rear view.
FIG. **14** is a front view.
FIG. **15** is a left view.
FIG. **16** is a right view.
FIG. **17** is a top left rear perspective view of a third embodiment of an ultrasound therapeutic treatment transducer embodying the new design.
FIG. **18** is a bottom right front perspective view thereof.
FIG. **19** is a top view thereof.
FIG. **20** is a bottom view.
FIG. **21** is a rear view.
FIG. **22** is a front view.
FIG. **23** is a left view.
FIG. **24** is a right view.
FIG. **25** is a top left rear perspective view of a fourth embodiment of an ultrasound therapeutic treatment transducer embodying the new design.
FIG. **26** is a bottom right front perspective view thereof.
FIG. **27** is a top view thereof.
(Continued)

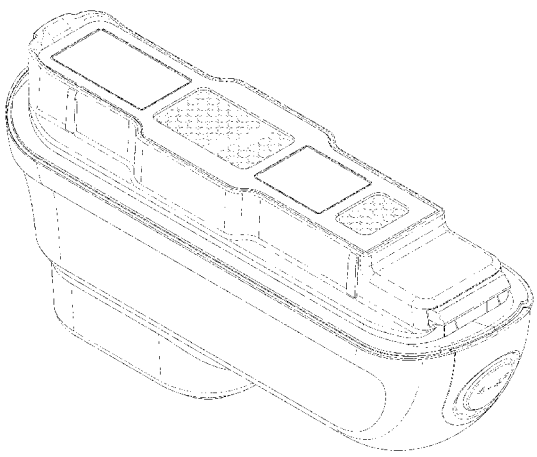

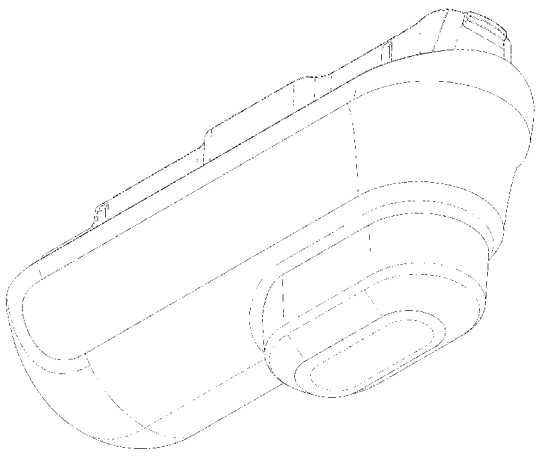

FIG. **28** is a bottom view.
FIG. **29** is a rear view.
FIG. **30** is a front view.
FIG. **31** is a left view; and,
FIG. **32** is a right view.
Broken lines are used to illustrate features of the ultrasound therapeutic treatment transducer which form no part of the claimed design.

1 Claim, 32 Drawing Sheets

(58) **Field of Classification Search**
CPC ... A61B 8/4236; A61B 8/4281; A61B 6/4441; A61B 6/114447; A61N 7/02
See application file for complete search history.

(56) **References Cited**

U.S. PATENT DOCUMENTS

D603,520	S	*	11/2009	Ninomiya	D24/187
D609,814	S	*	2/2010	Banryu	D24/187
D630,757	S	*	1/2011	Kitayama	D24/187
D684,265	S	*	6/2013	Cadera	D24/187
D700,969	S	*	3/2014	Kim	D24/187
D729,166	S	*	5/2015	Baba	D13/133
D778,440	S	*	2/2017	Ben-Moshe	D24/137
D809,142	S	*	1/2018	Lim	D24/160
D811,605	S	*	2/2018	Chang	D24/187
D820,263	S	*	6/2018	Rebello	D14/426
D829,329	S	*	9/2018	Quam	D24/186
D835,285	S	*	12/2018	Barker	D24/186
D836,244	S	*	12/2018	Floyd	D28/7

* cited by examiner

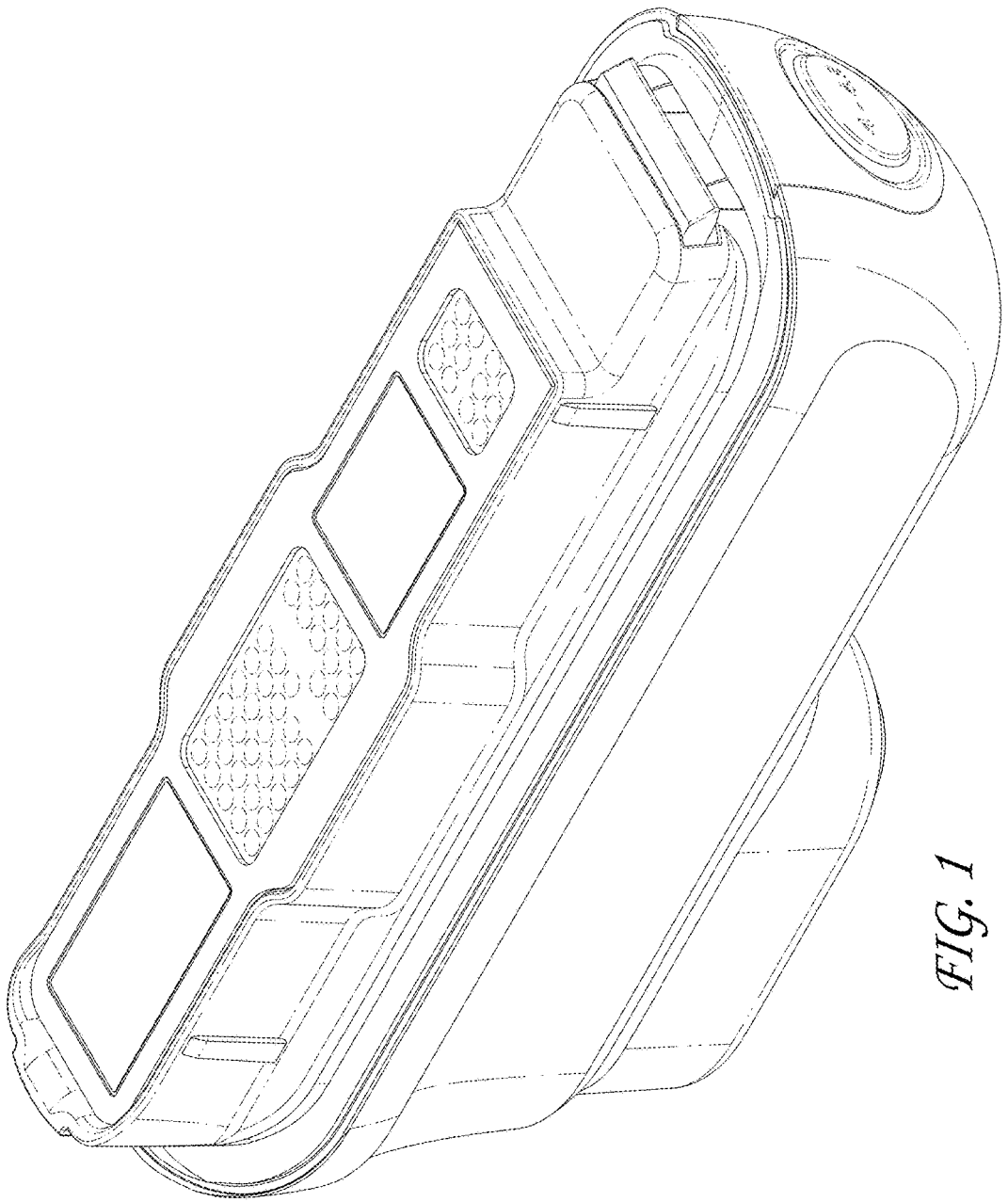

FIG. 1

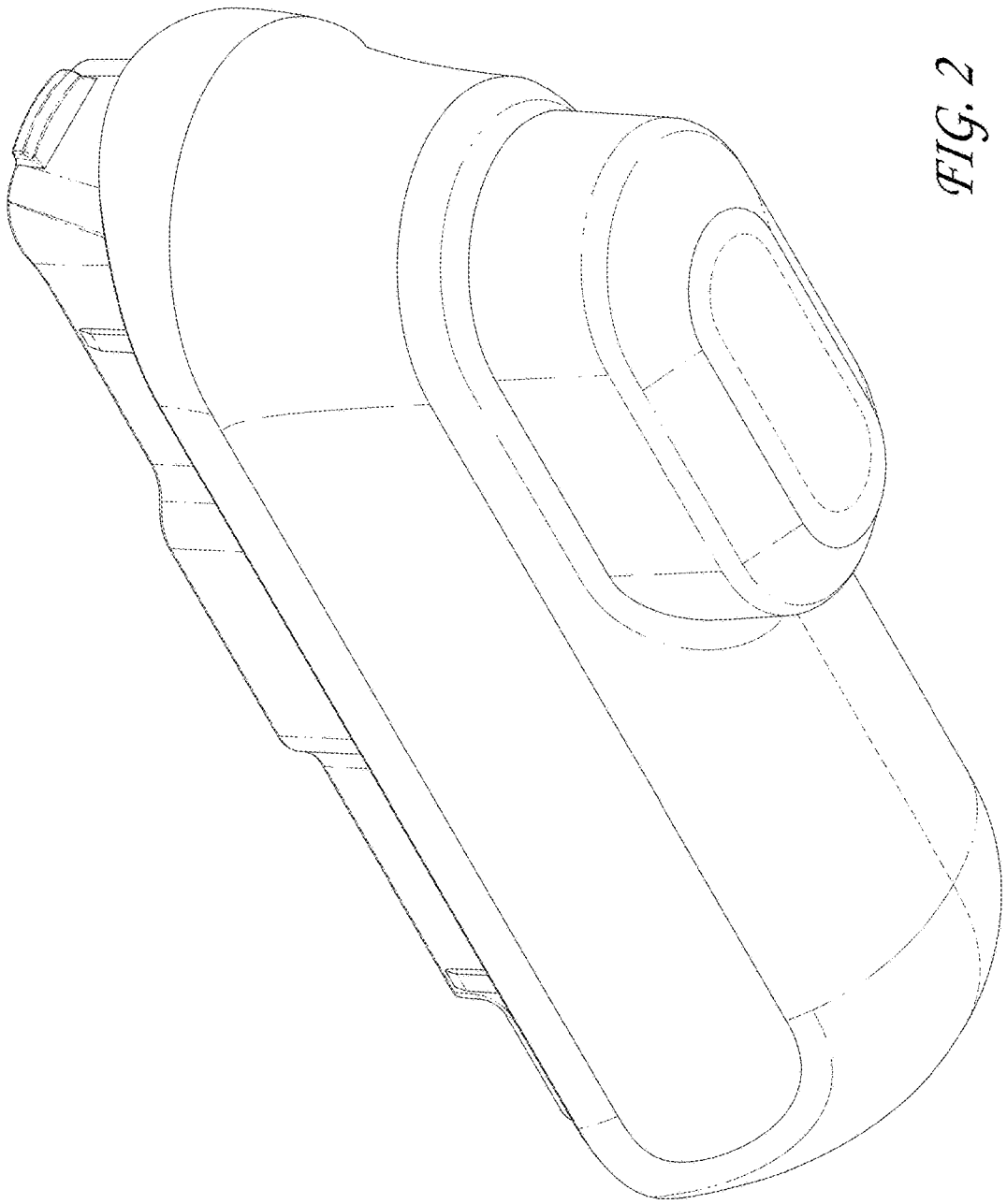

FIG. 2

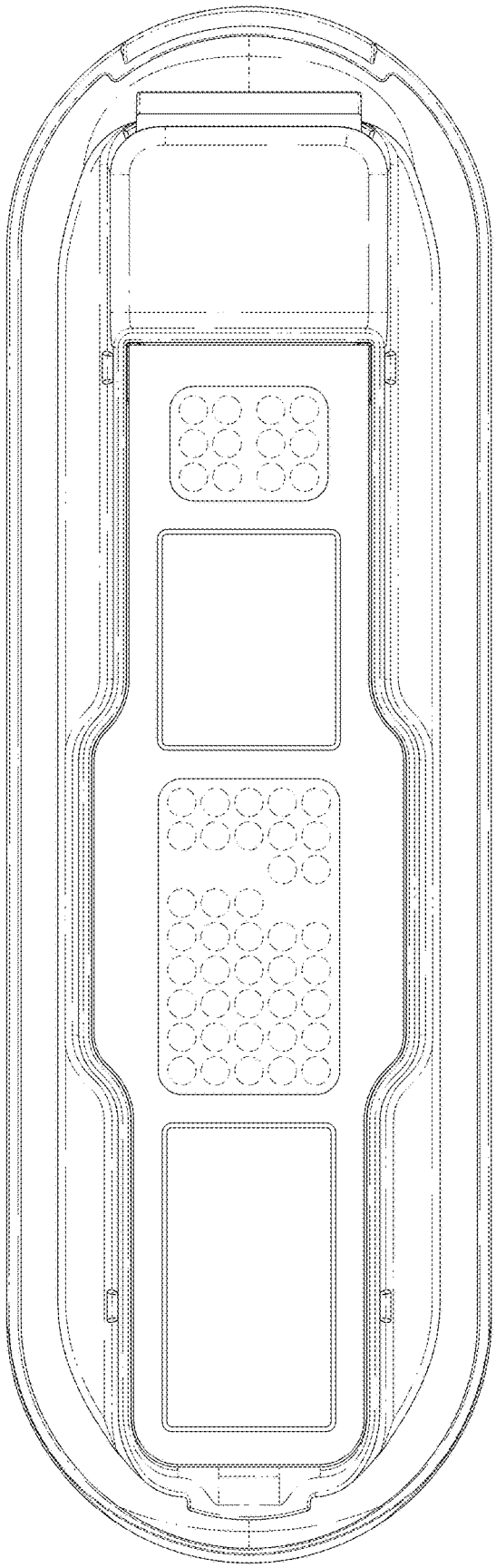

FIG. 3

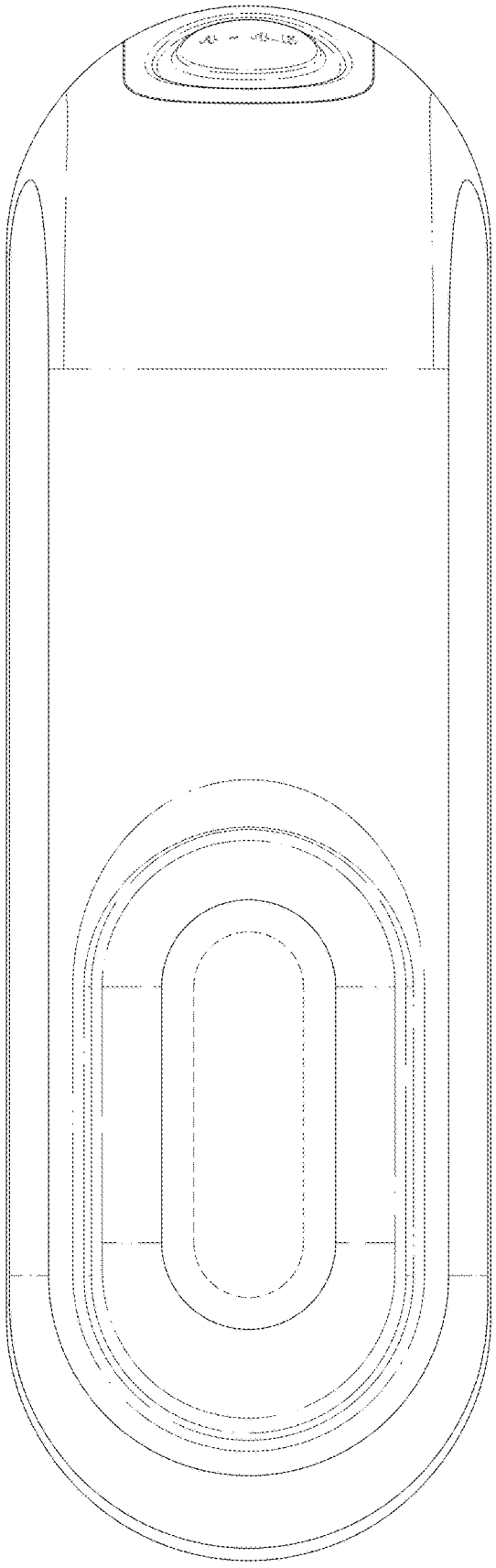

FIG. 4

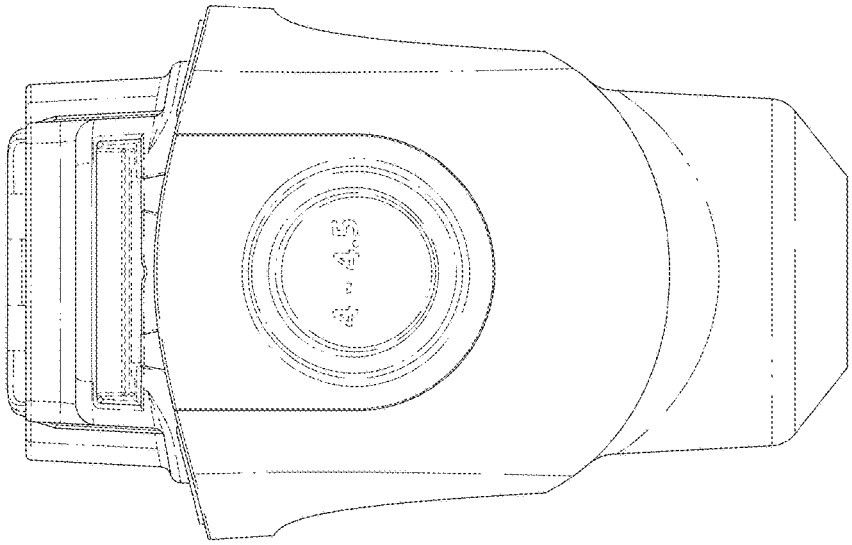

FIG. 5

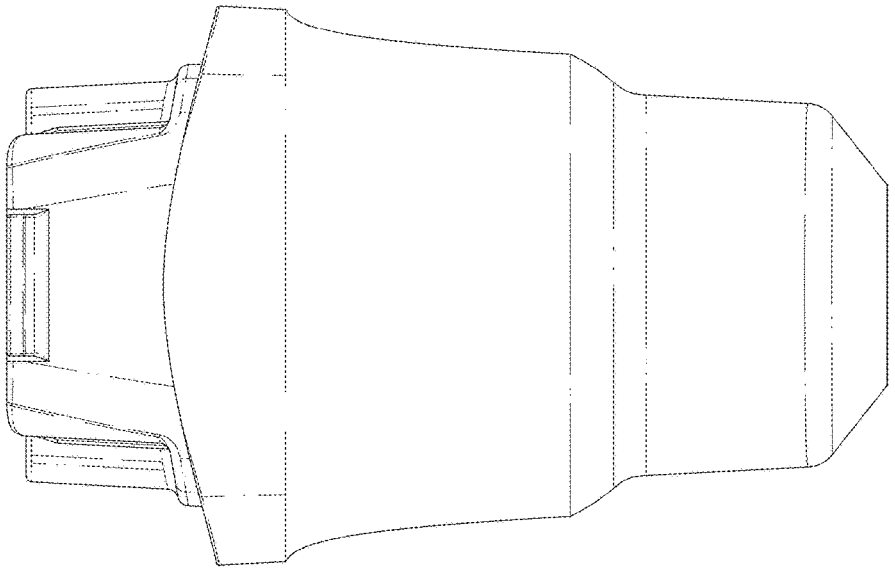

FIG. 6

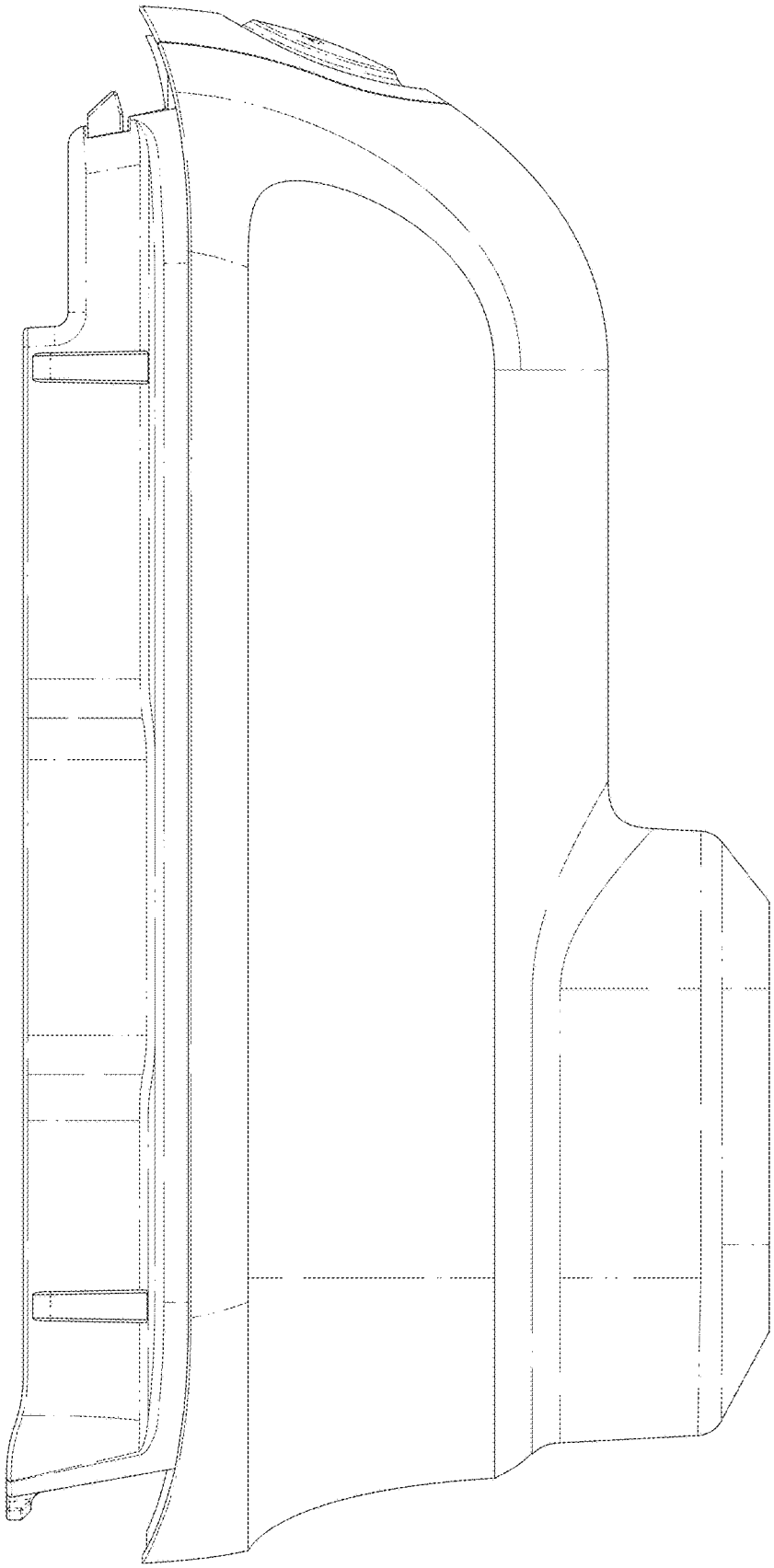

FIG. 7

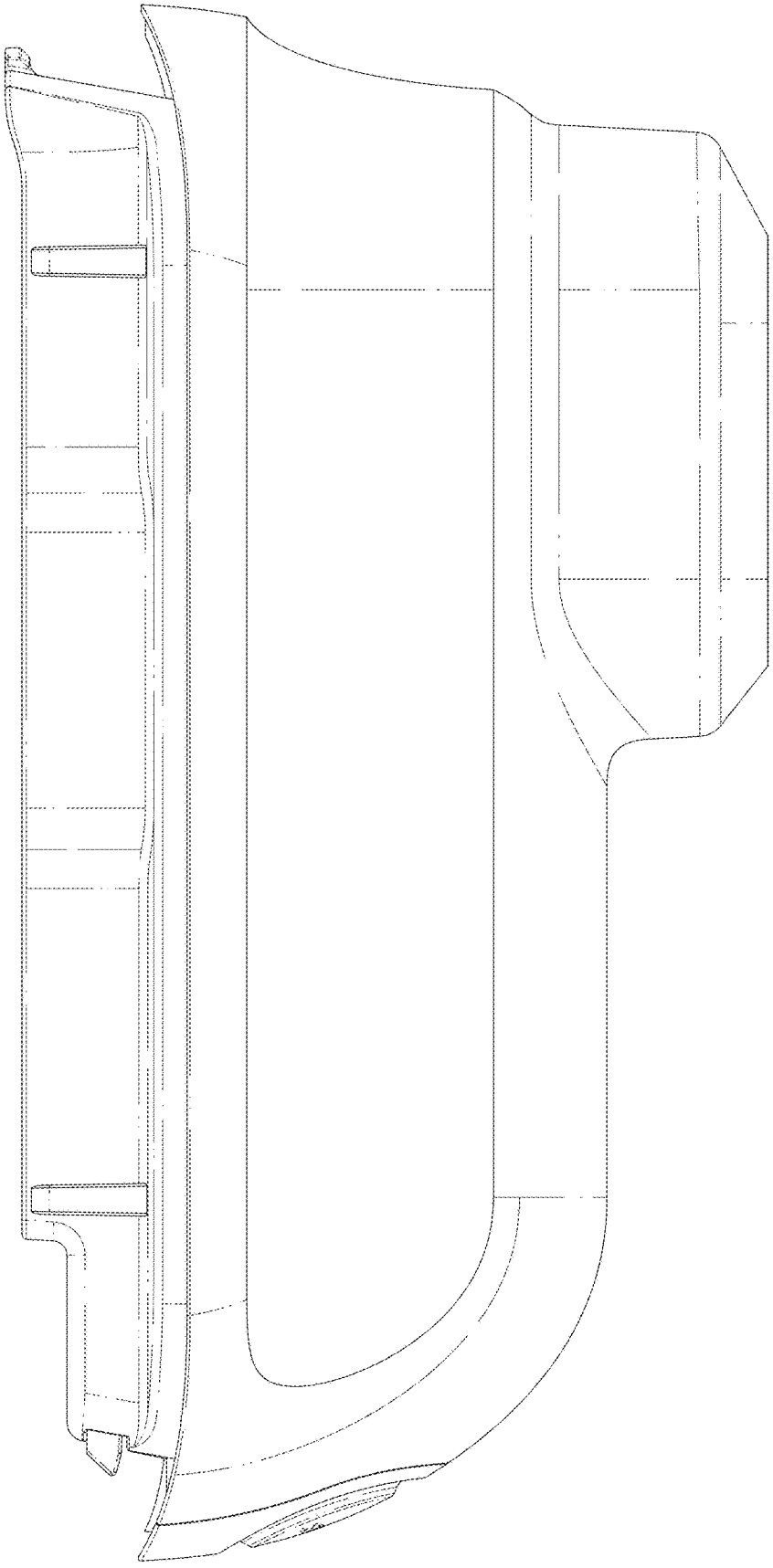

FIG. 8

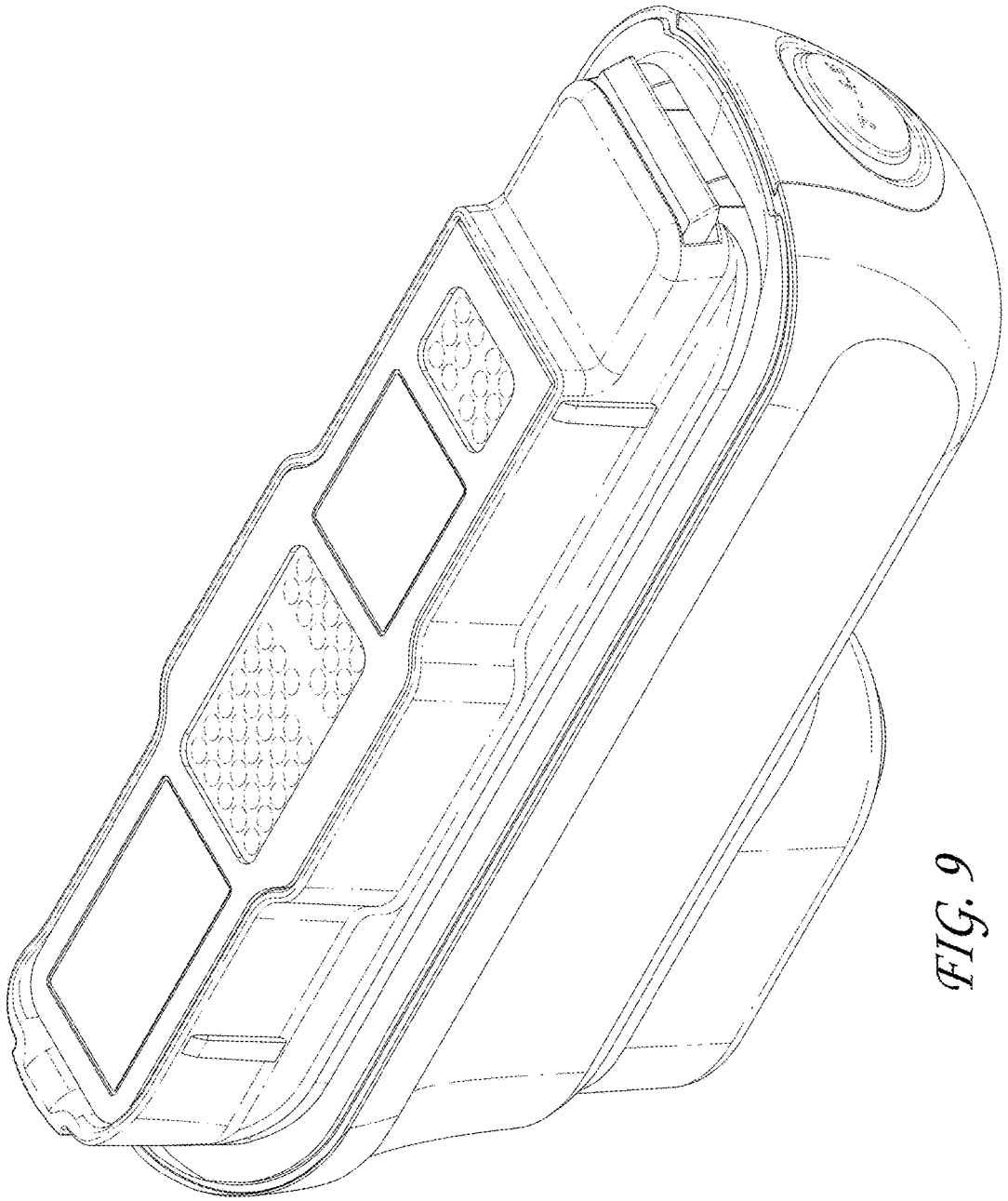

FIG. 9

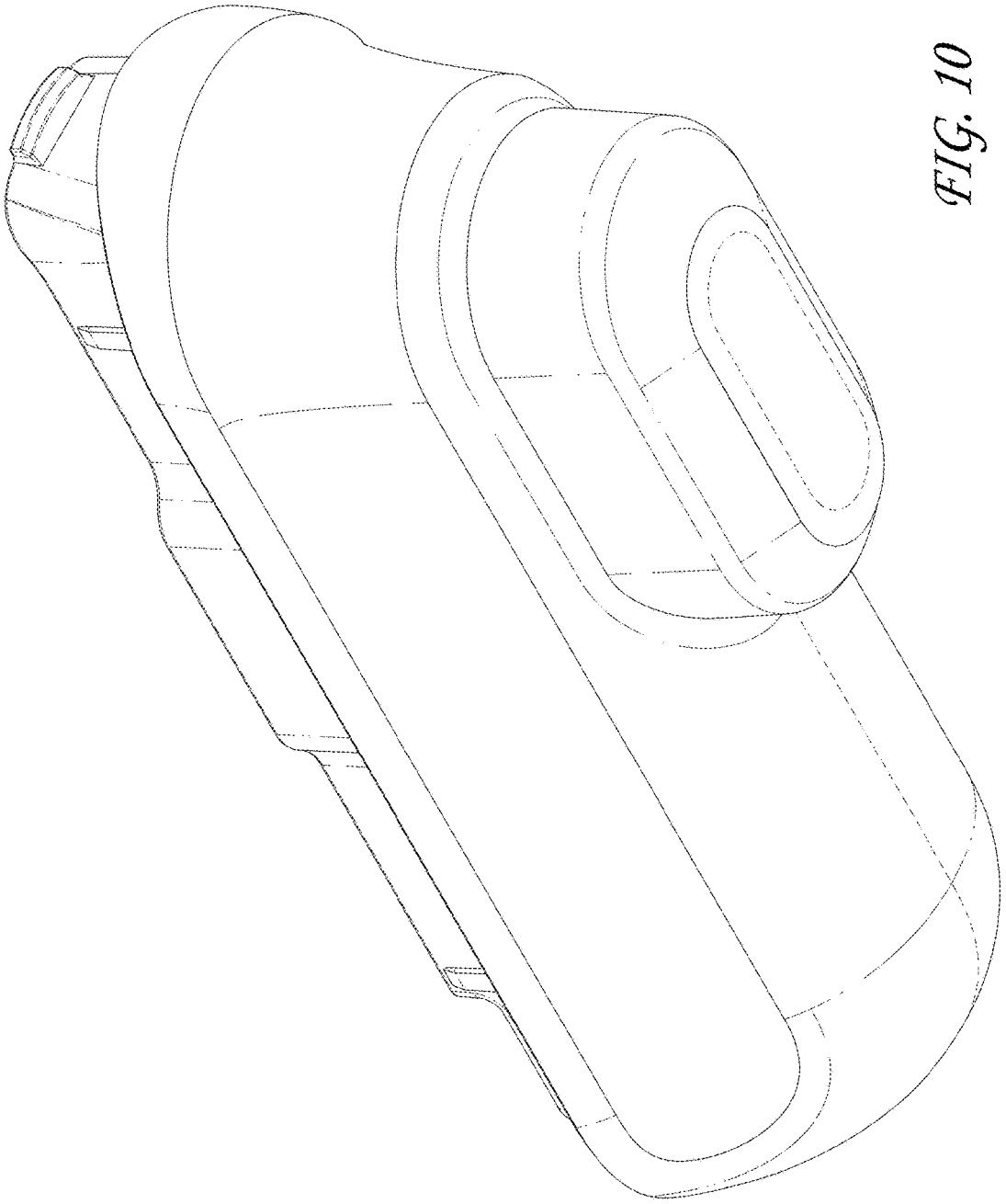

FIG. 10

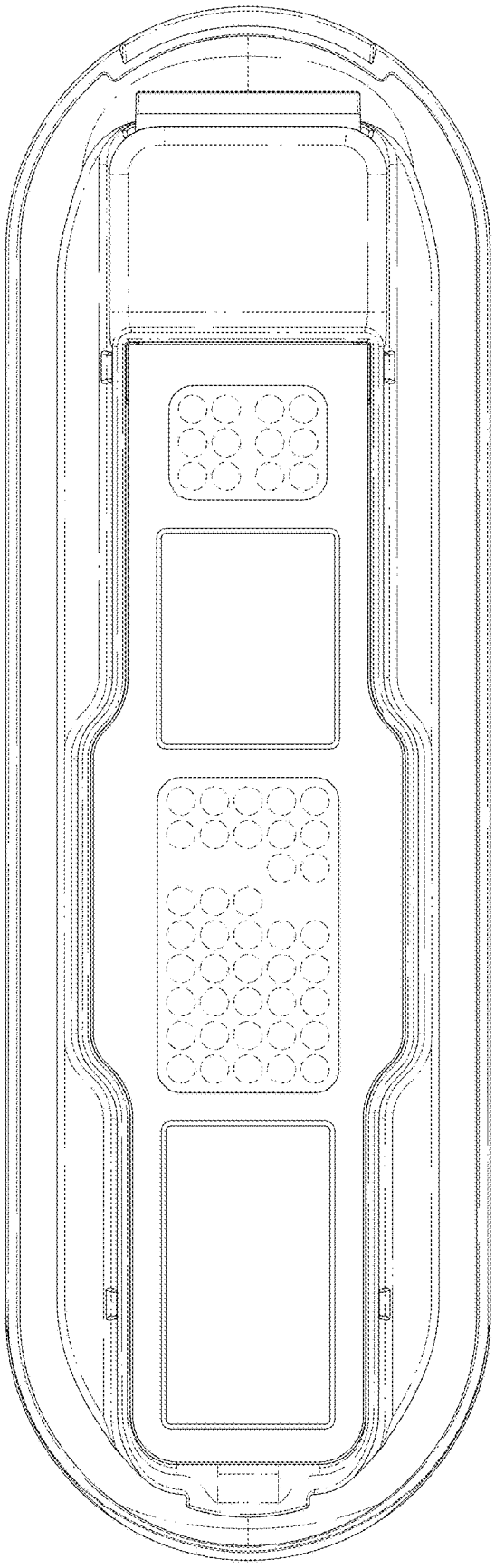

FIG. 11

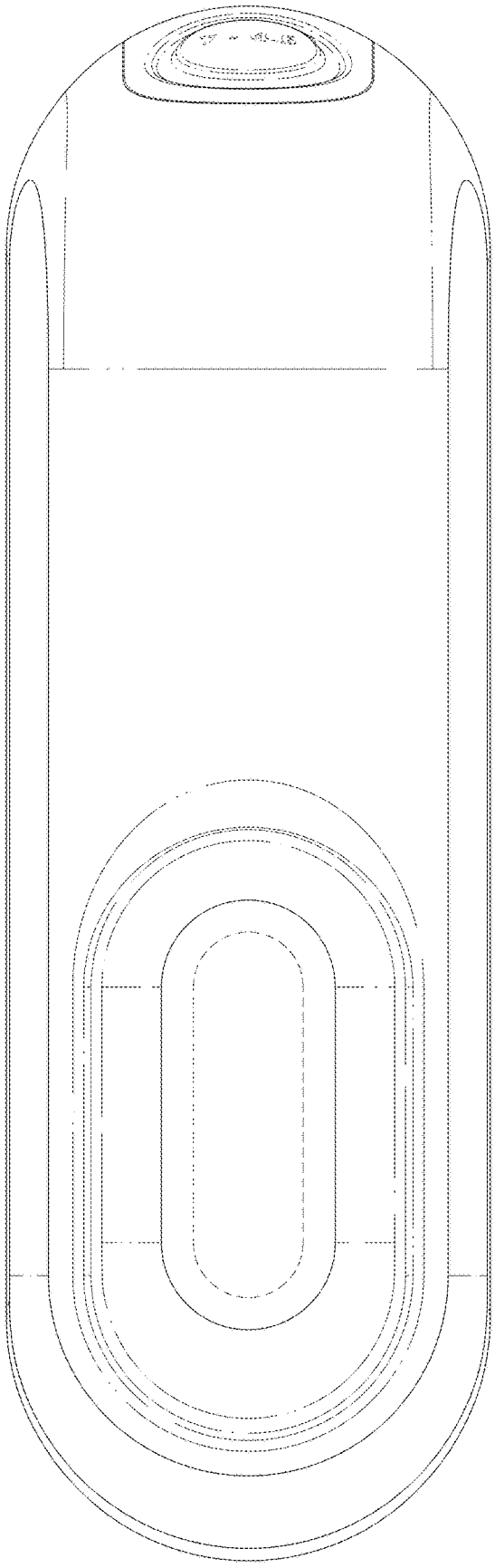

FIG. 12

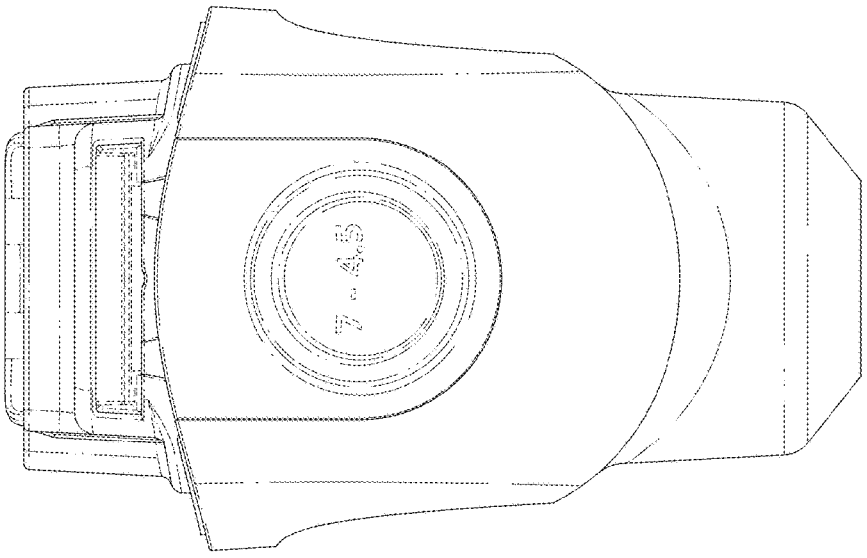

FIG. 13

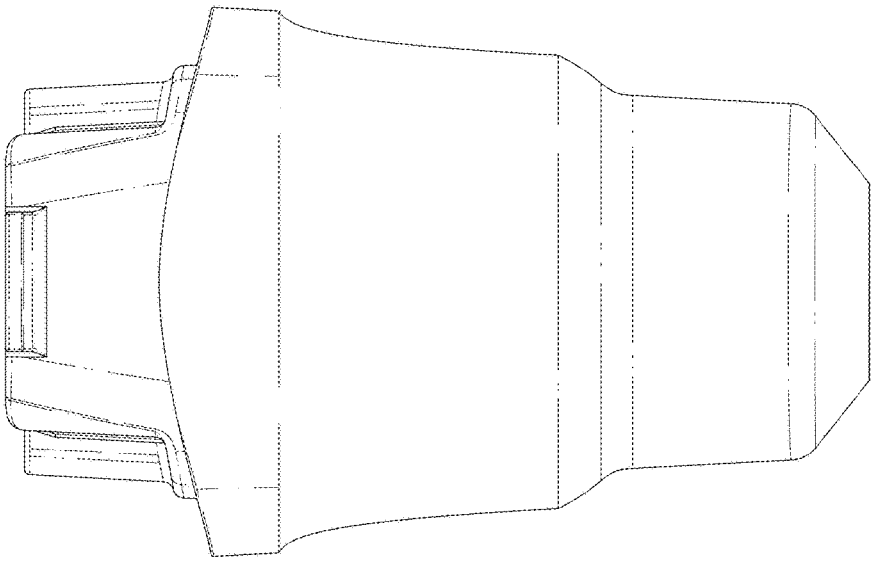

FIG. 14

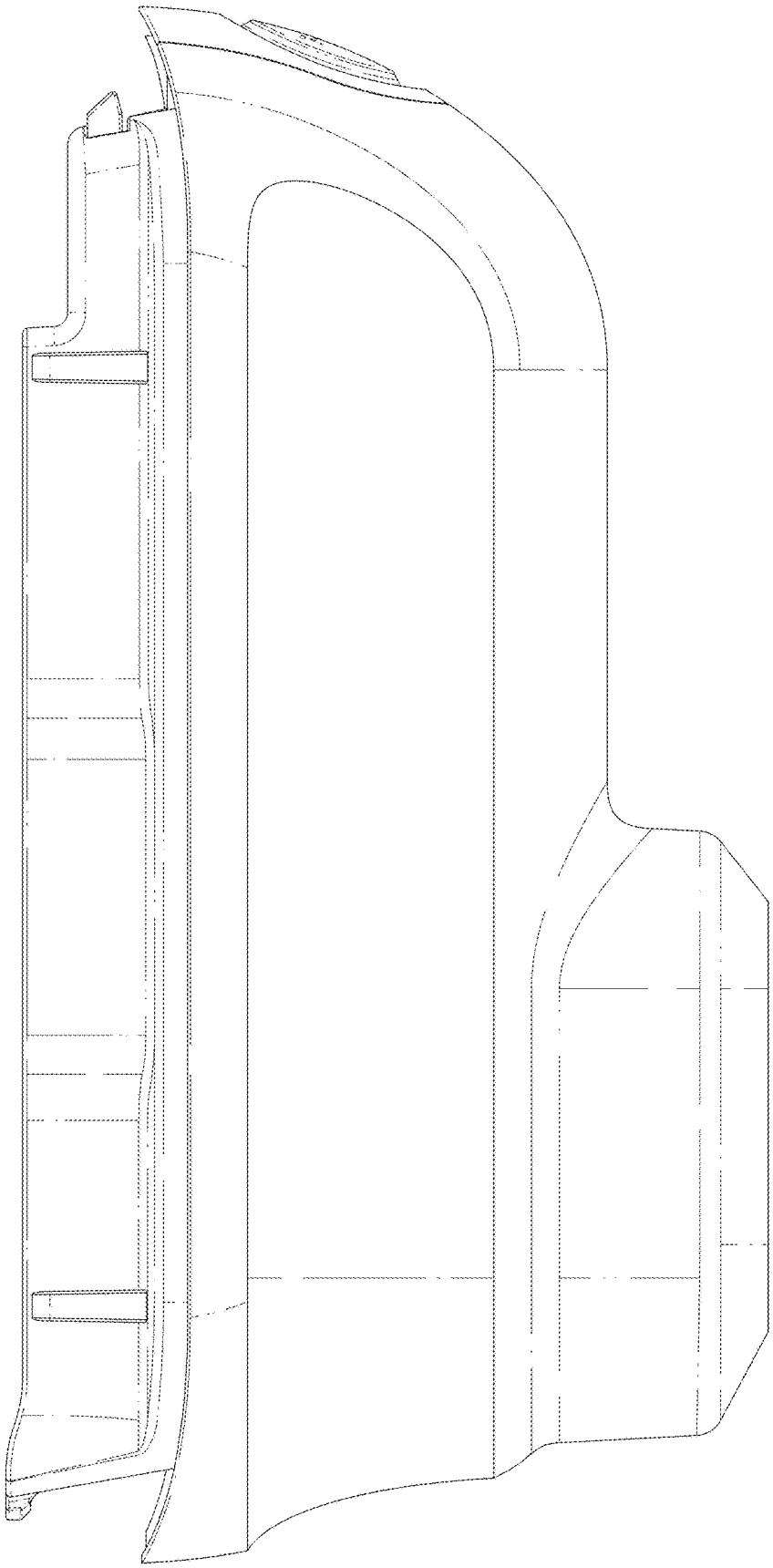

FIG. 15

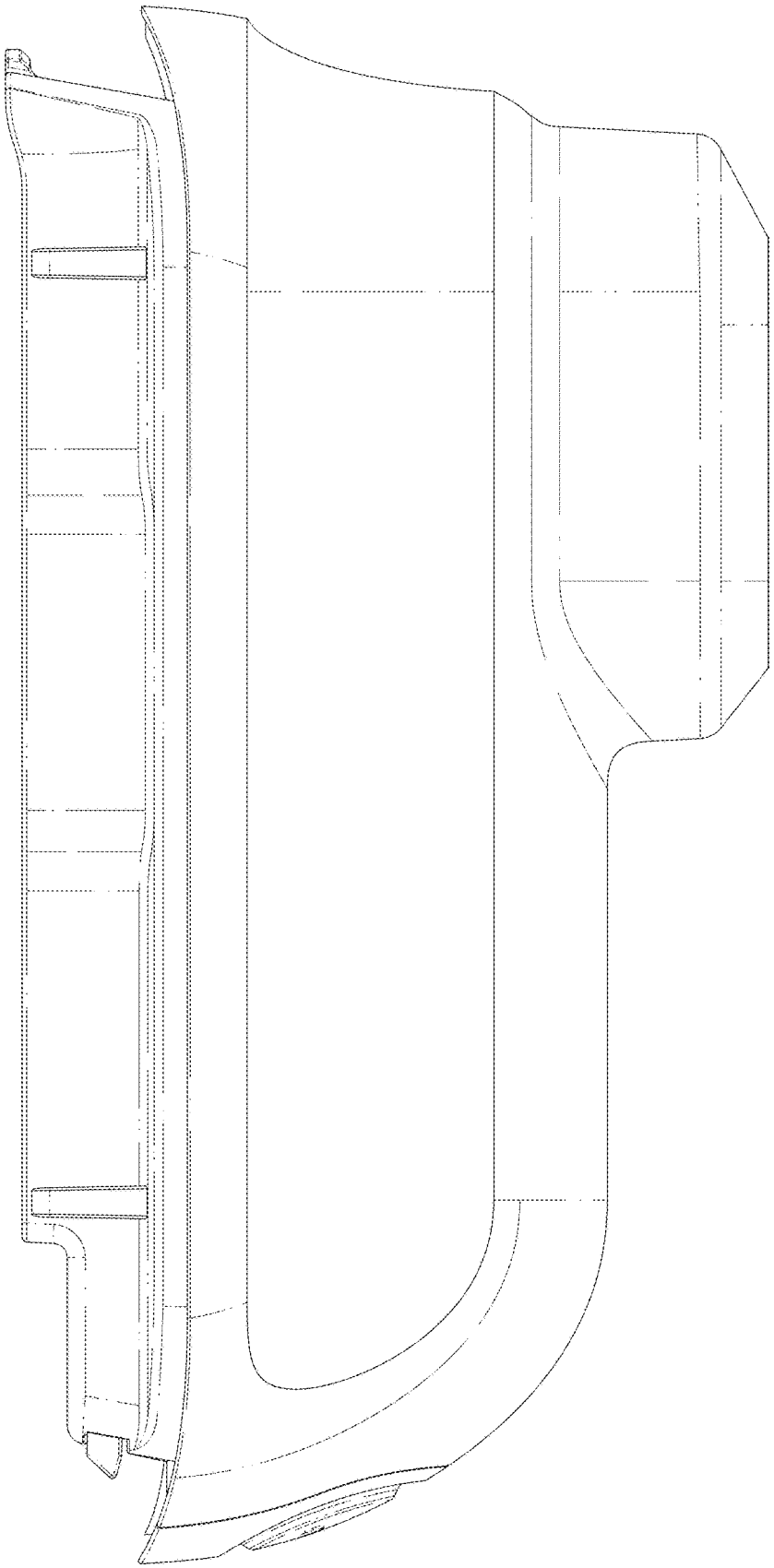

FIG. 16

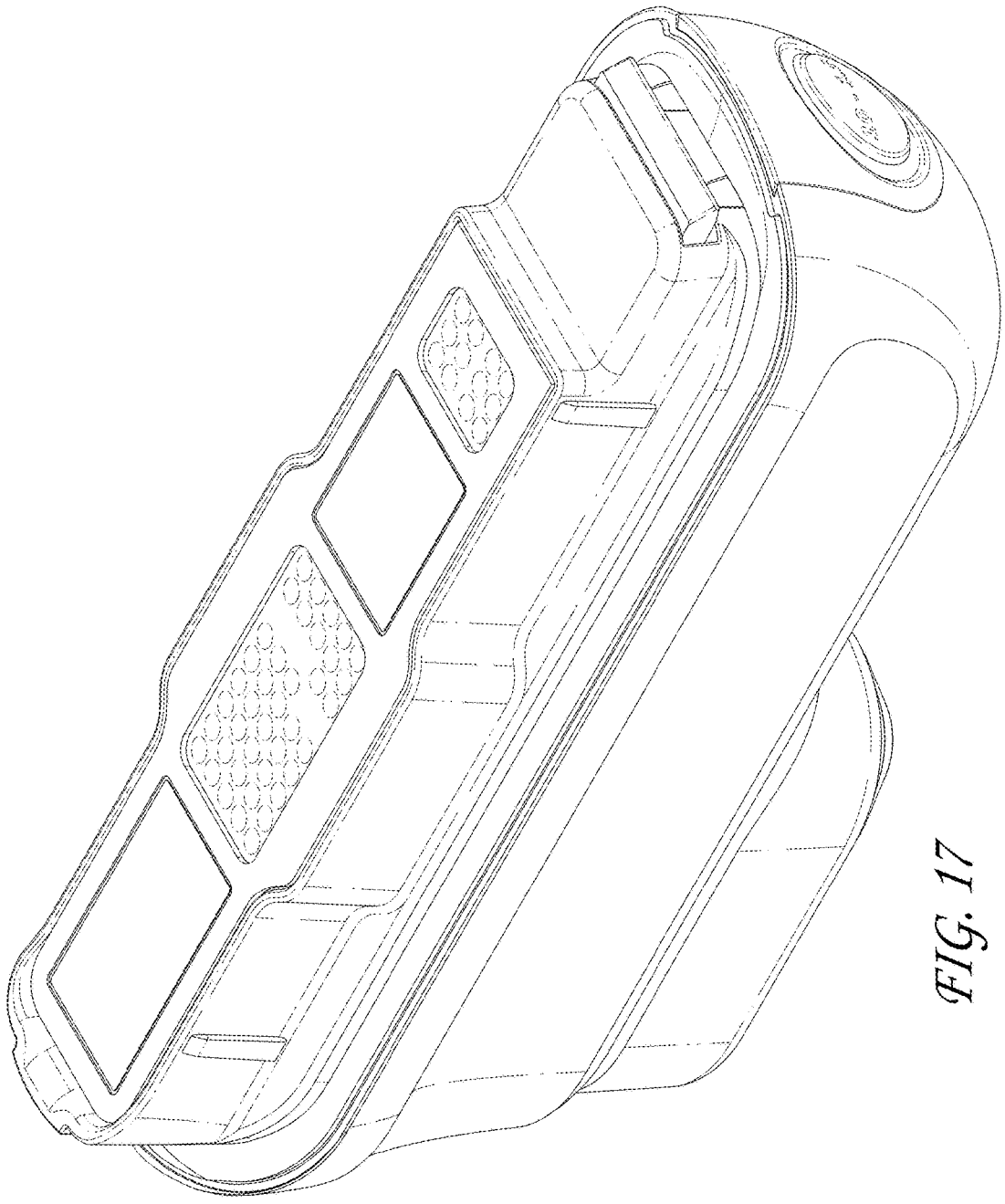

FIG. 17

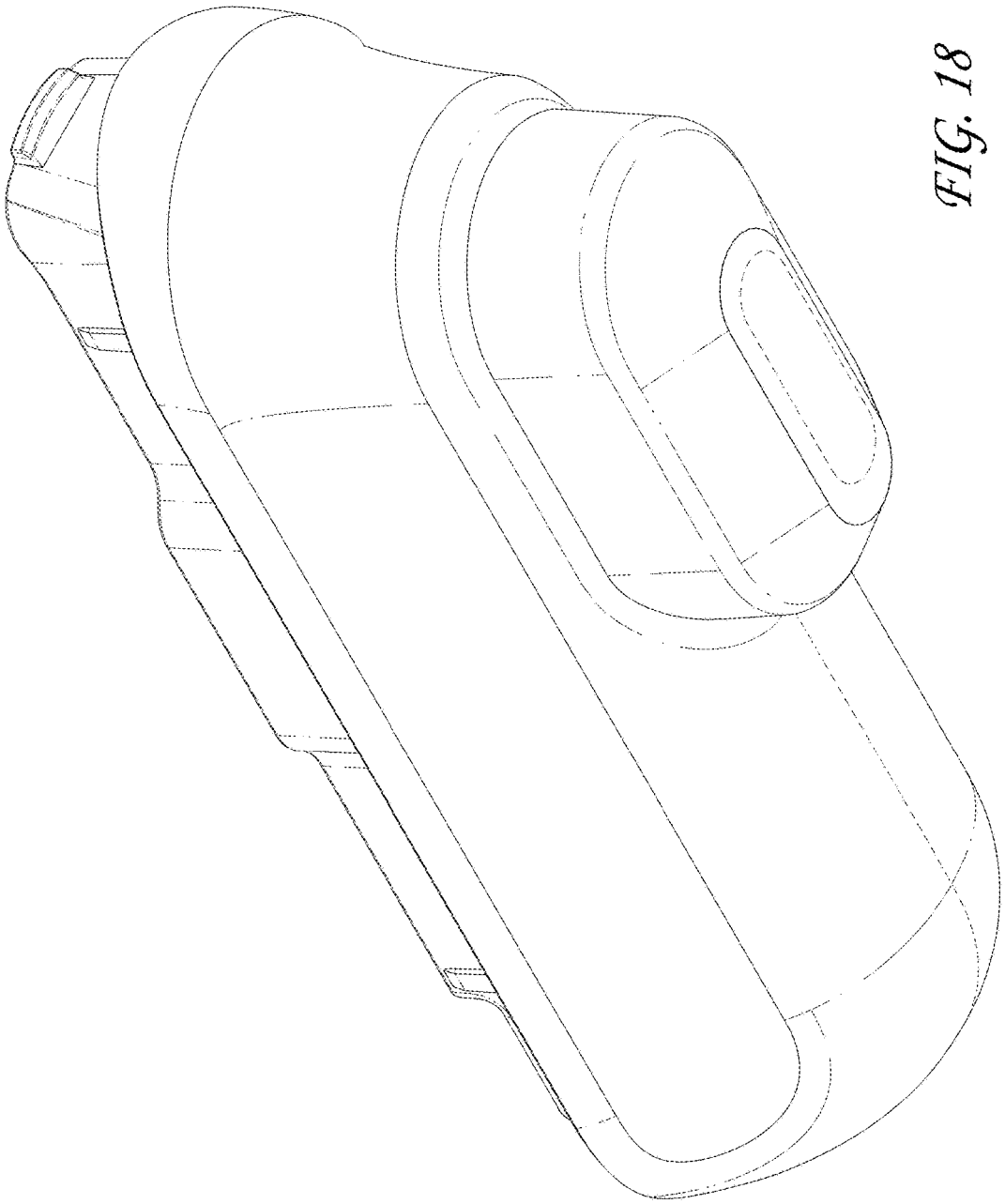

FIG. 18

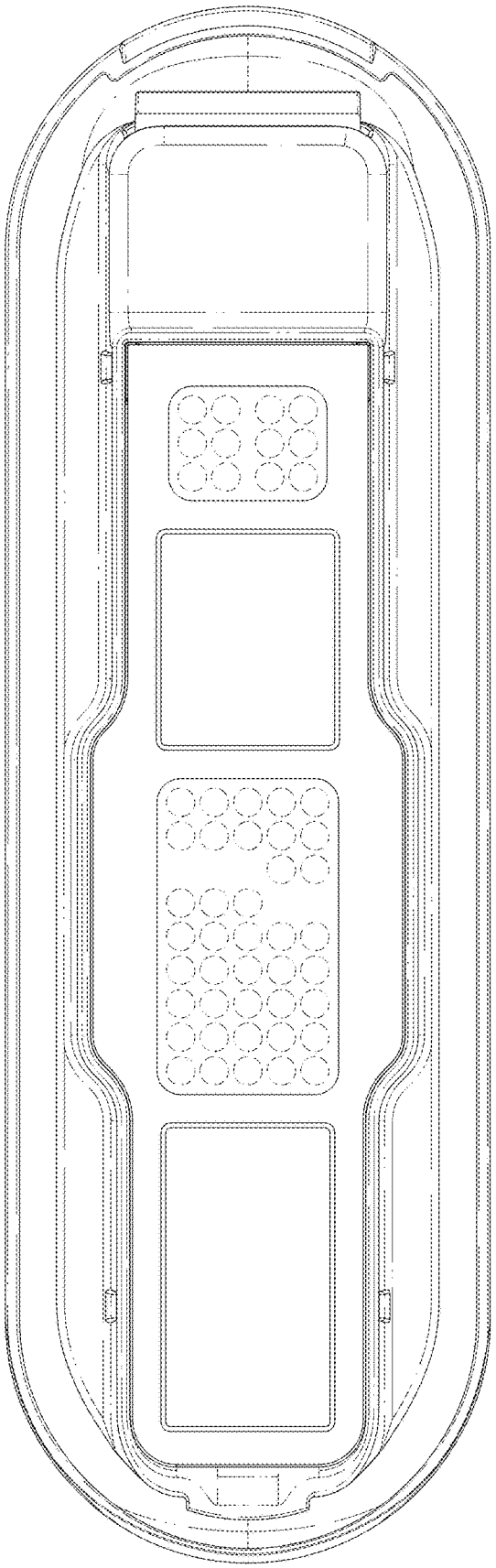

FIG. 19

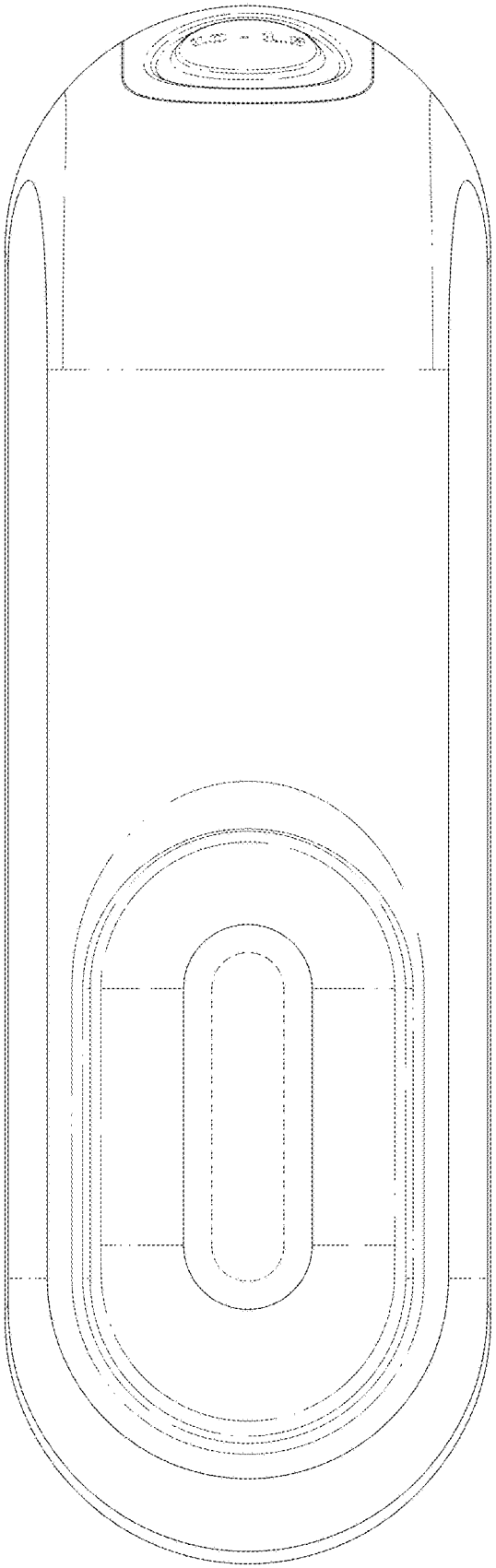

FIG. 20

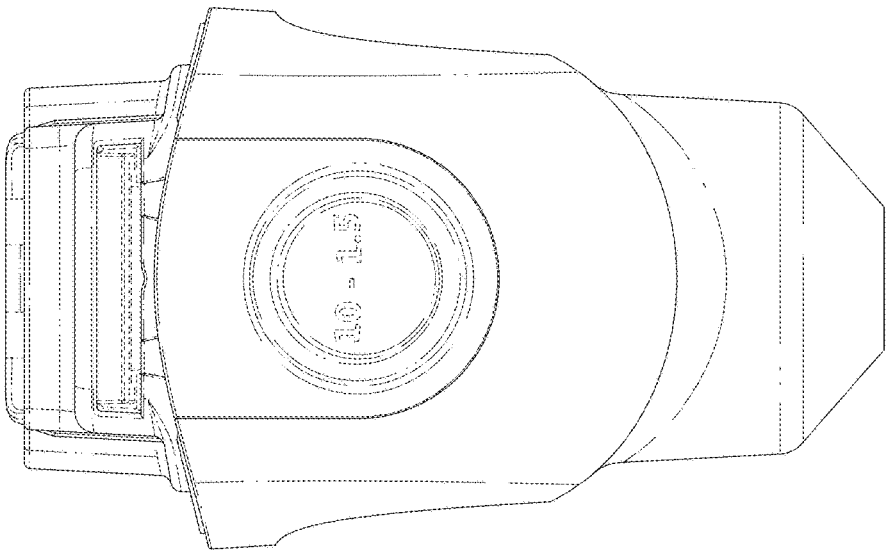

FIG. 21

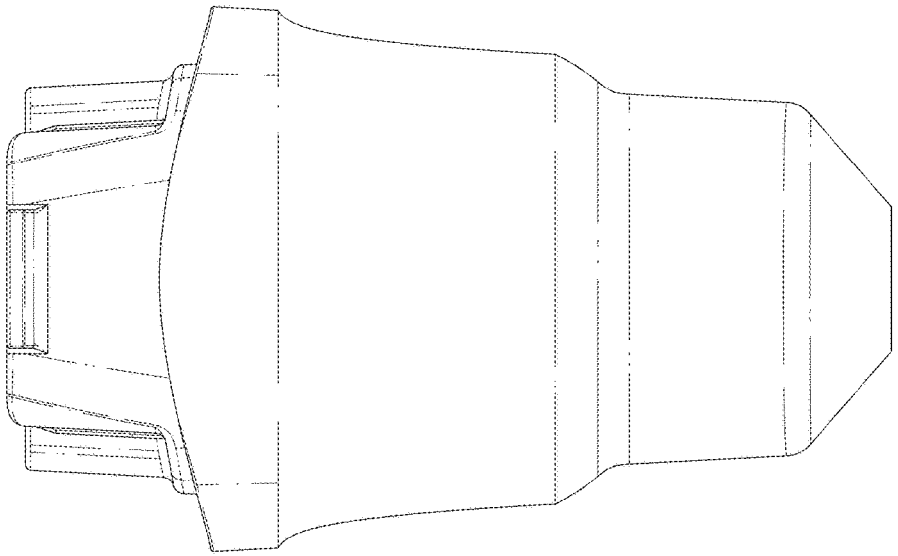

FIG. 22

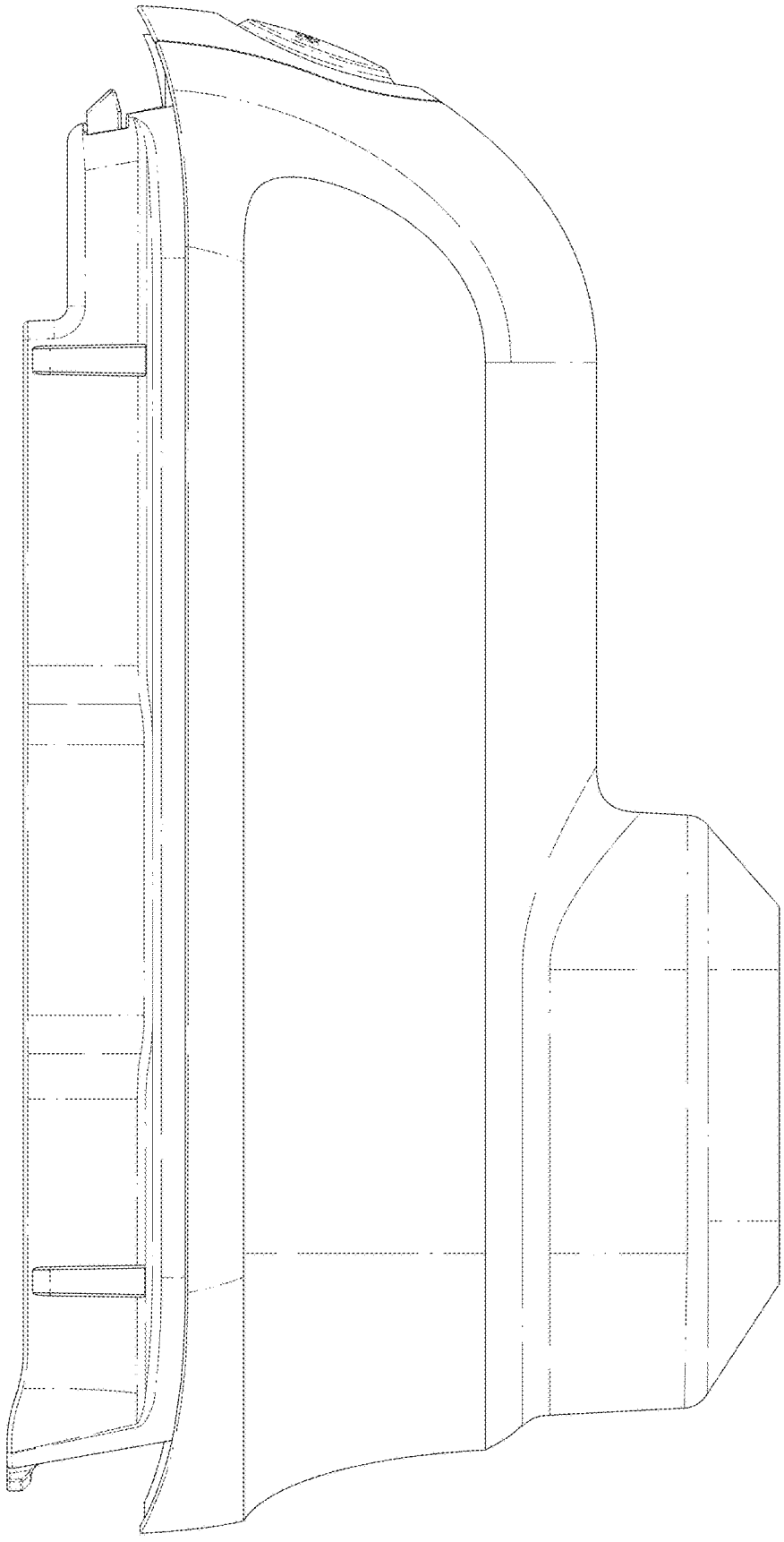

FIG. 23

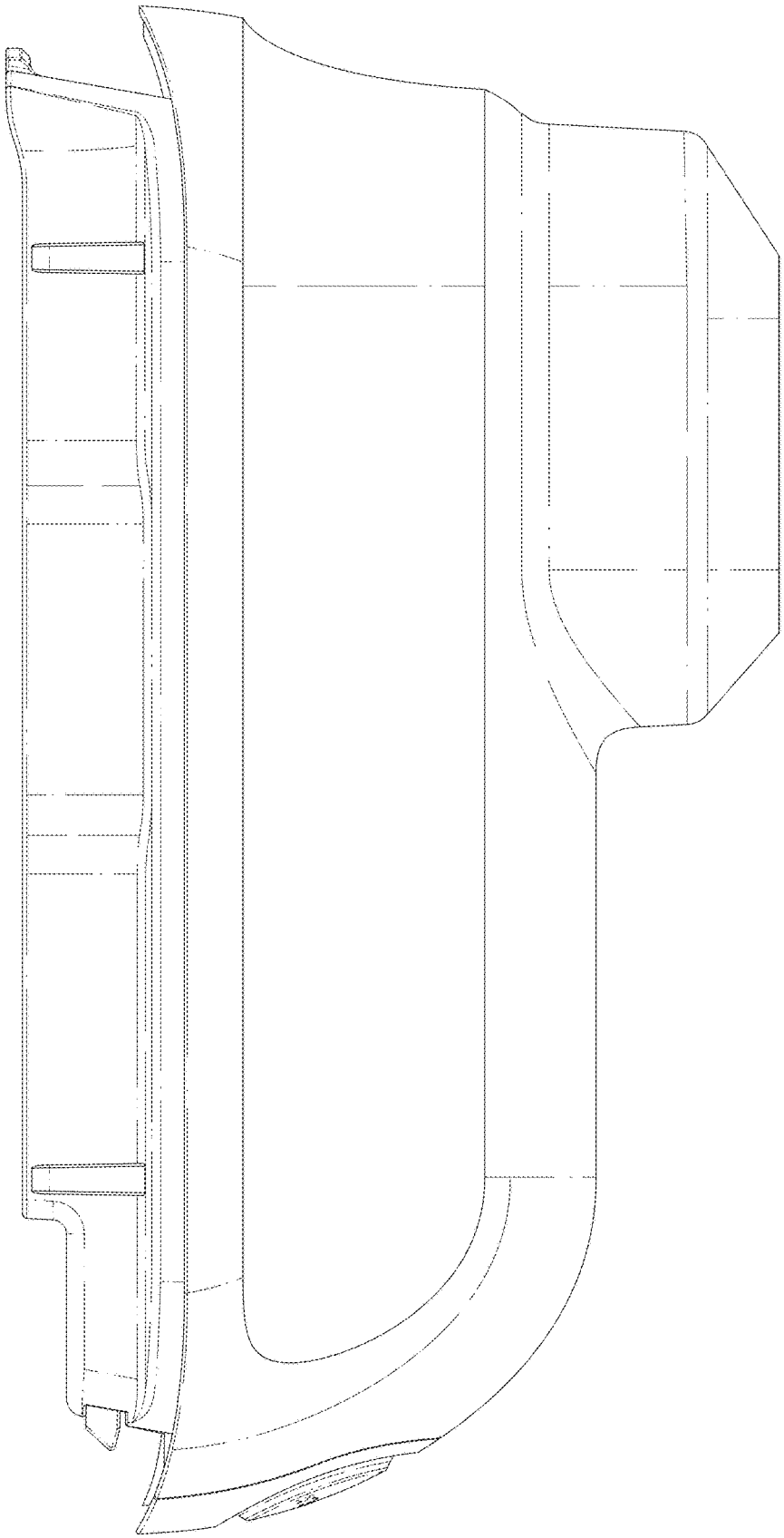

FIG. 24

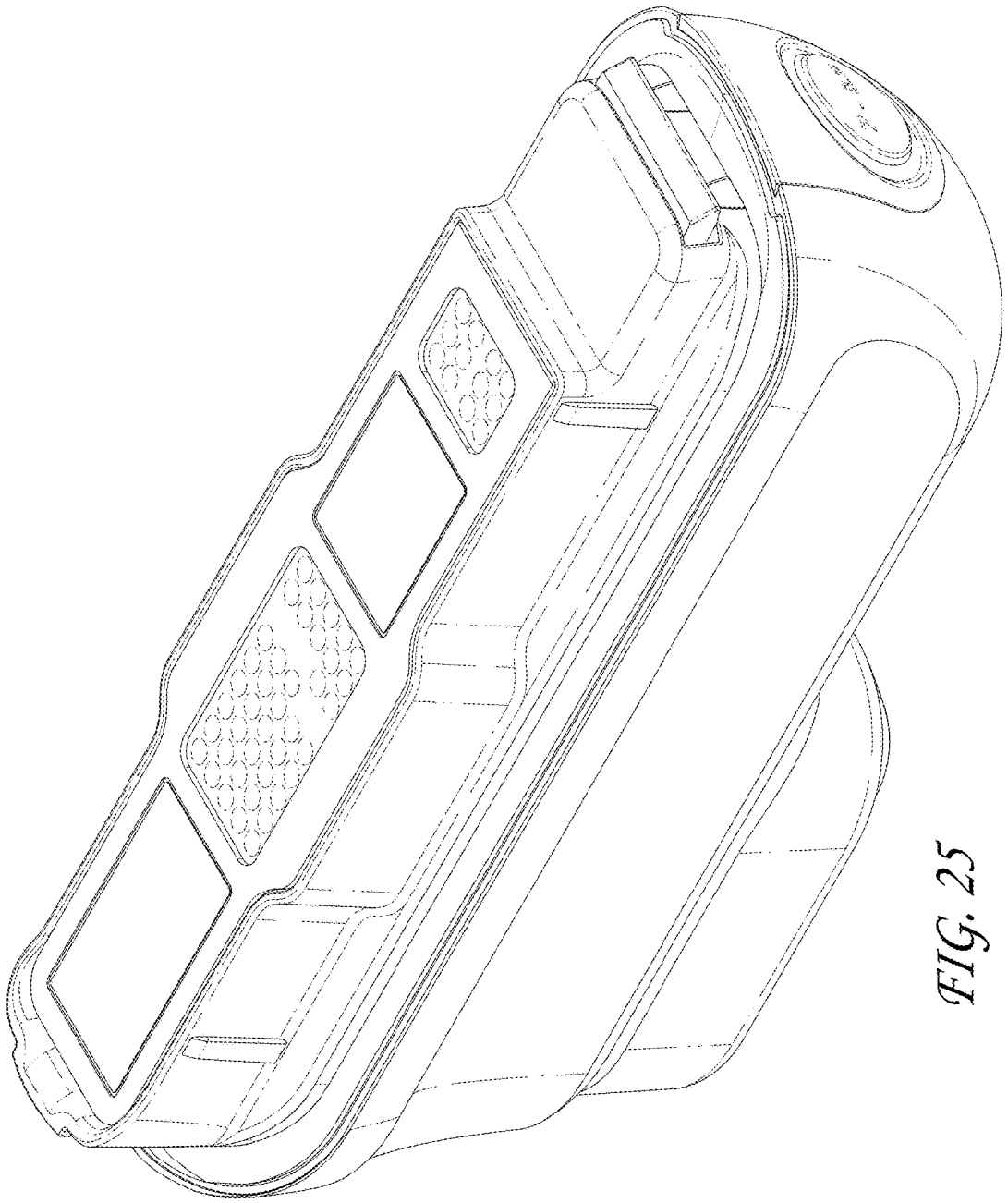

FIG. 25

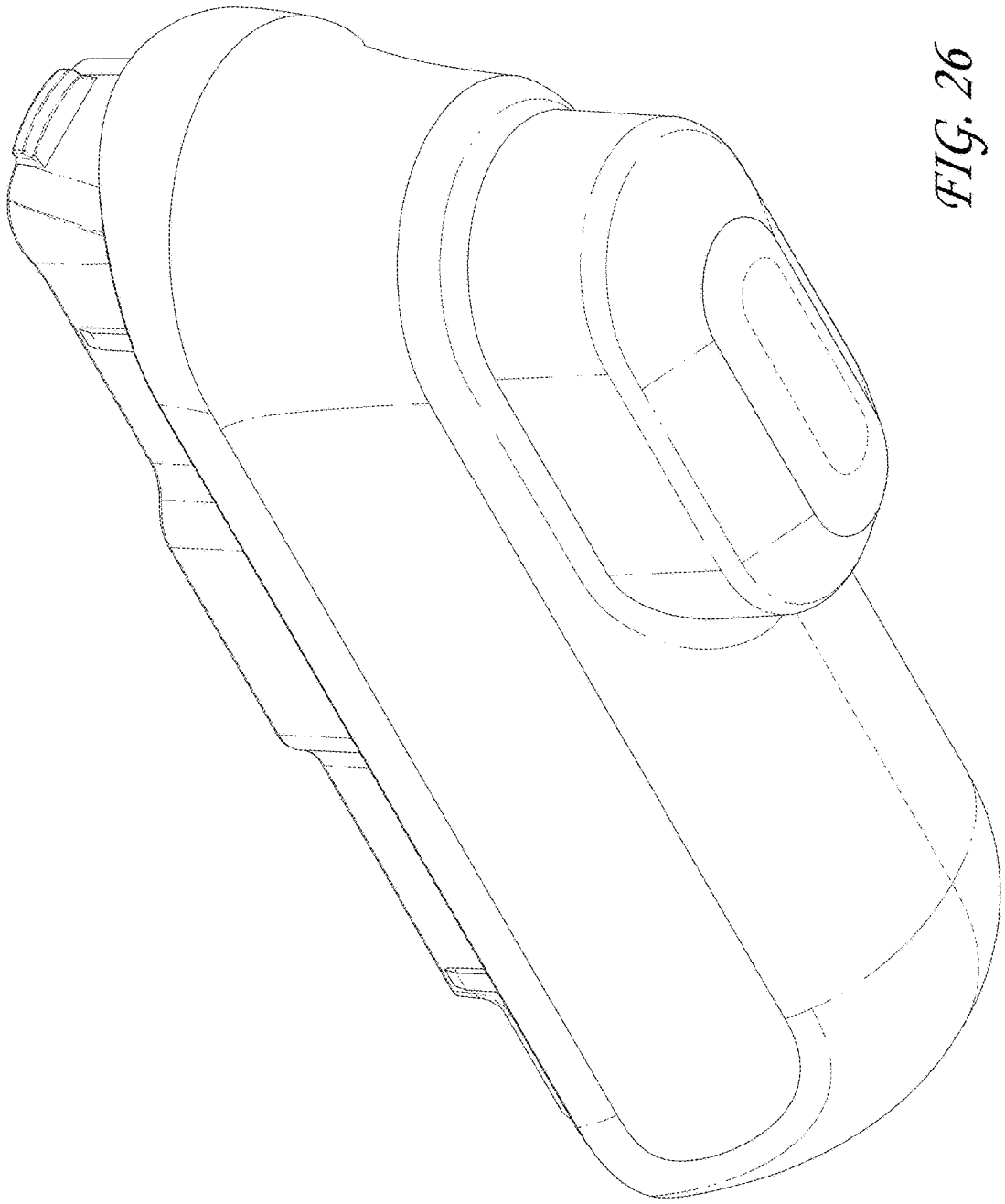

FIG. 26

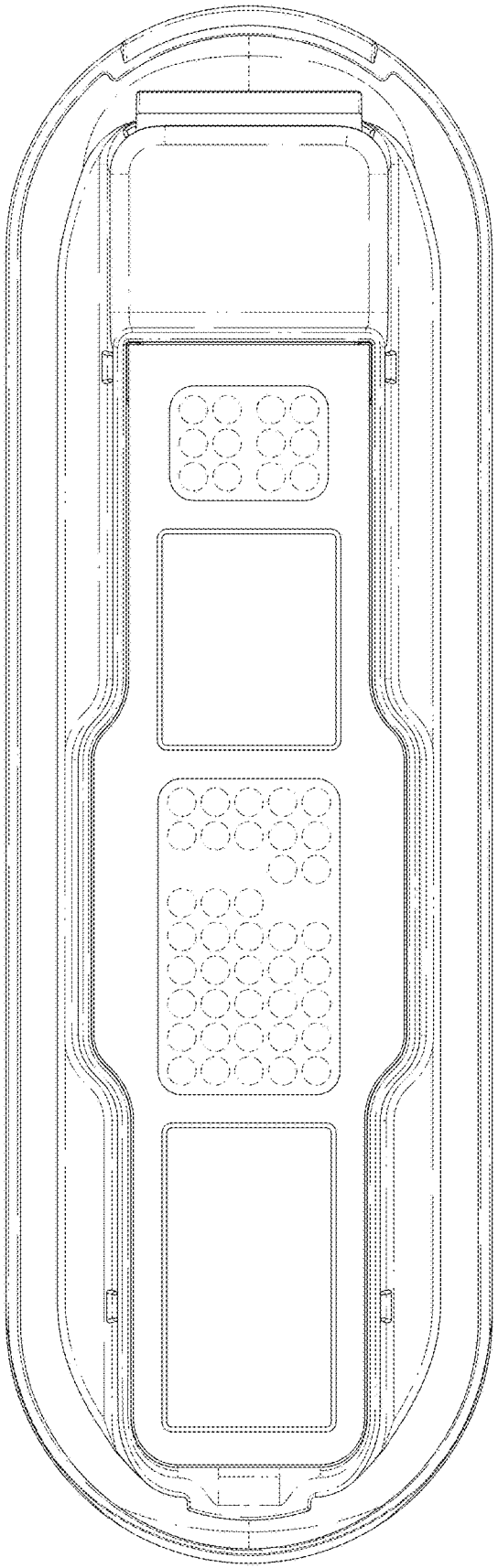

FIG. 27

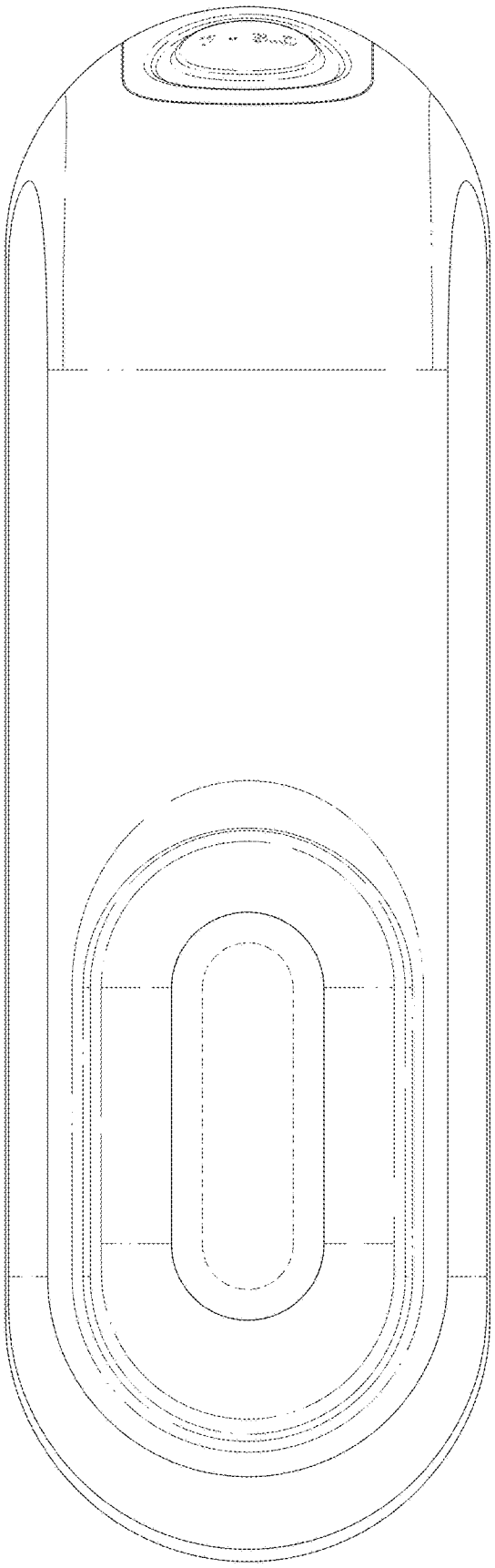

FIG. 28

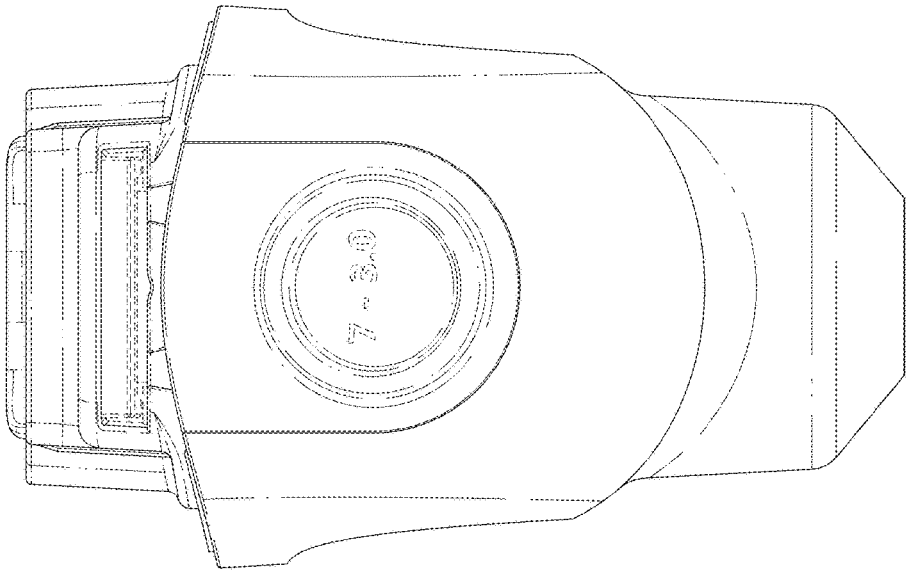

FIG. 29

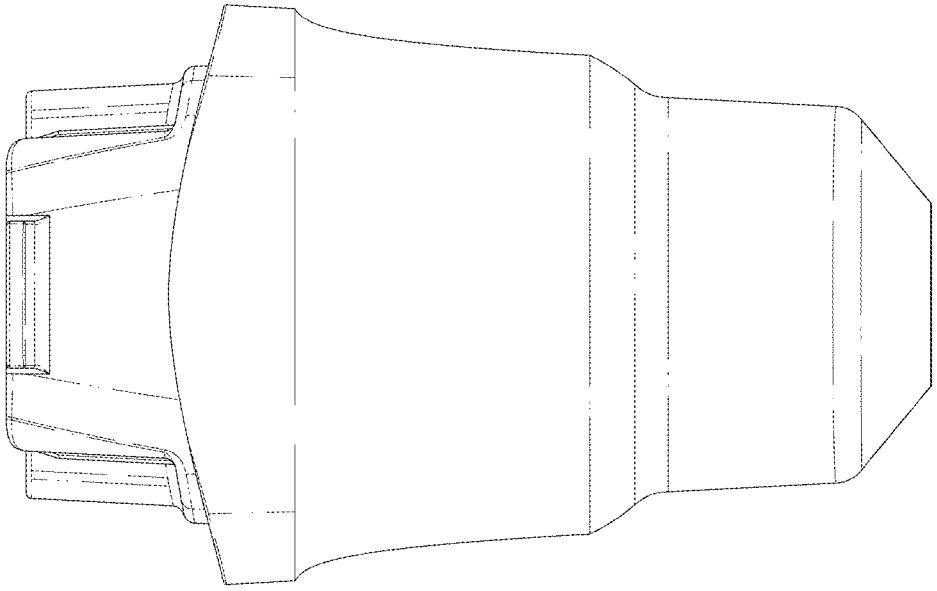

FIG. 30

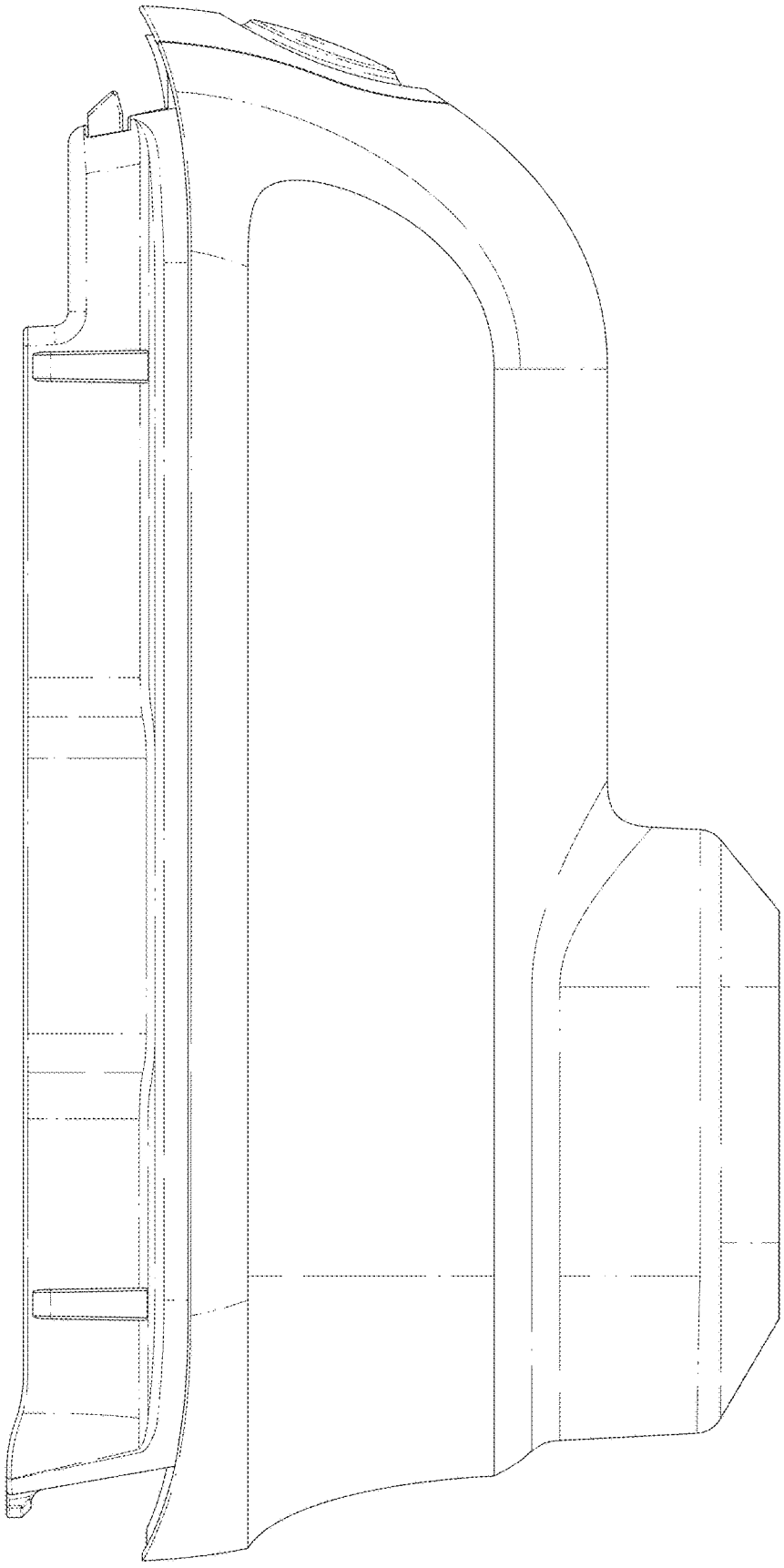

FIG. 31

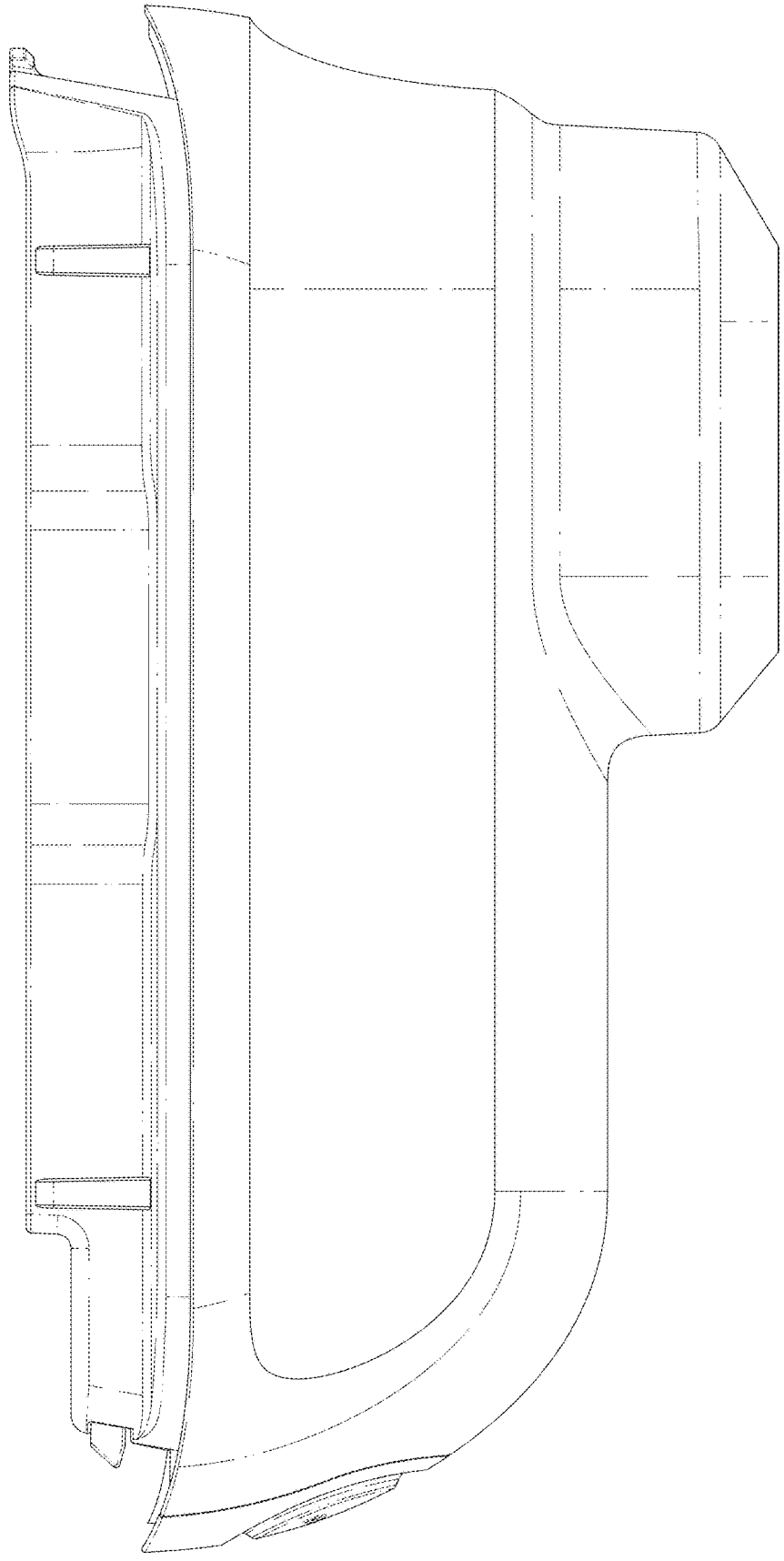

FIG. 32