W. KAISLING.

RELAY.

APPLICATION FILED NOV. 16, 1914.

1,192,323. Patented July 25, 1916.

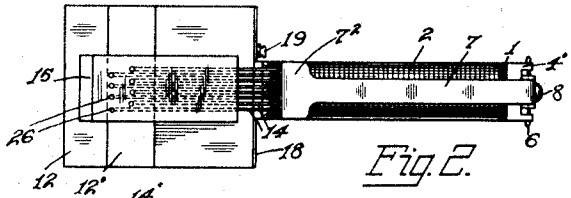

Fig. 2.

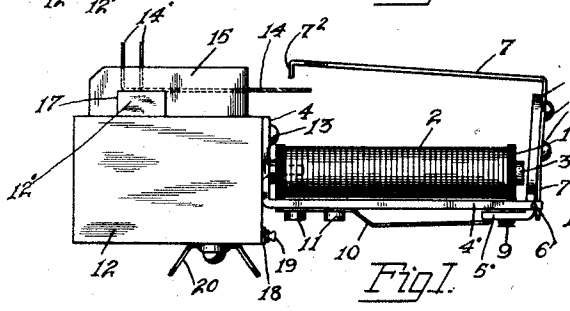

Fig. 1.

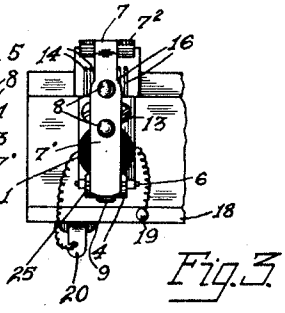

Fig. 3.

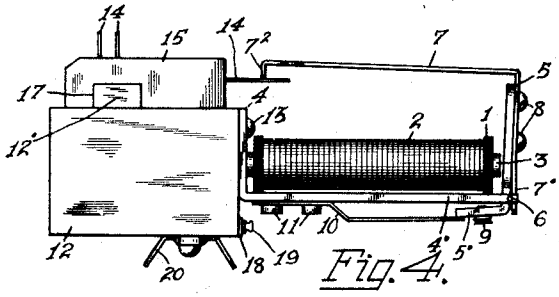

Fig. 4.

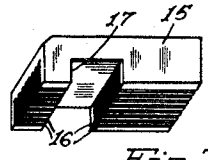

Fig. 7.

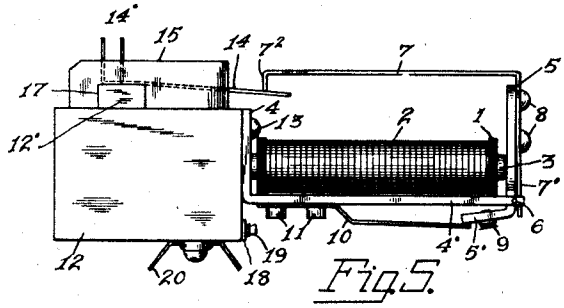

Fig. 5.

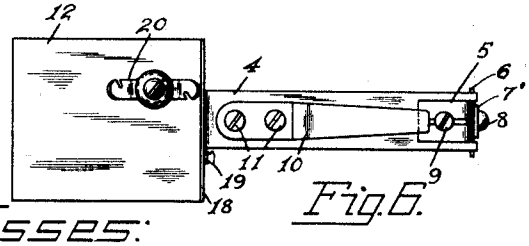

Fig. 6.

Witnesses:

George E. Mueller

Wm. Berghahn

Inventor:

William Kaisling

By Curtis B. Camp.

Attorney.

UNITED STATES PATENT OFFICE.

WILLIAM KAISLING, OF CHICAGO, ILLINOIS, ASSIGNOR TO KELLOGG SWITCHBOARD AND SUPPLY COMPANY, OF CHICAGO, ILLINOIS, A CORPORATION OF ILLINOIS.

RELAY.

1,192,323. Specification of Letters Patent. Patented July 25, 1916.

Application filed November 16, 1914. Serial No. 872,489.

To all whom it may concern:

Be it known that I, WILLIAM KAISLING, a citizen of the United States of America, residing at Chicago, county of Cook, and State of Illinois, have invented certain new and useful Improvements in Relays, of which the following is a specification.

My invention relates to relays, and has to do more particularly with relays of the multi-contact type, such as are adapted for use in organs. In devices of this kind, it is essential that they be very compact and small, so that they may be mounted in a comparatively small space. Furthermore, the relays must be positive in operation and simple of construction. To this end I have provided a new and improved form of relay which is adapted to be mounted upon comparatively small centers, and at the same time of such construction that a number of contacts may be operated by its armature.

For a more complete understanding of my invention reference may be made to the accompanying drawing in which like reference characters denote like parts and in which—

Figure 1 is a side elevation of the magnet in its normal or unoperated position; Fig. 2 is a plan view of Fig. 1; Fig. 3 is a right end view of Fig. 1; Fig. 4 illustrates the magnet in a partially operated condition showing the armature contact arm just touching the stationary contact members; Fig. 5 illustrates the magnet in its fully energized condition; Fig. 6 is a bottom view of Fig. 5; and Fig. 7 shows the manner in which the contact block is slotted.

Referring now more in detail to my invention as illustrated, it comprises an electromagnet 1 having an energizing winding 2 upon the spool core 3. An angular heel iron 4 of suitable magnetic material is in contact with the core 3, preferably serving as a mounting means for the spool 1 as the core 3 is fastened to the heel iron in a suitable manner, preferably by a screw passing through 4 into core 3. An armature 5 is provided which is pivotally supported in the extension 4^1 of the heel iron 4 by means of a pivot pin 6, lying in a suitable groove 25 (Fig. 3) cut in the face of the armature 5. A contact arm 7 is fastened to the armature 5 by means of the rivets 8, the portion 7^1 of which rests against the pin 6 thus securely holding the armature on its pivot to allow it to rock about the said pivot pin 6. An adjustment screw 9 is provided which is threaded into the slotted portion 5^1 of the armature 5 providing means by which the proper air gap may be maintained between the armature 5 and the core 3. A restoring spring 10 is fastened to the extension 4^1 by means of the screws 11. The magnet and its associated parts are mounted as a whole upon the mounting block 12 by means of the screws 13 which pass through the heel iron 4 and screw into the block 12.

The relay is adapted for closing a plurality of contacts and for this purpose I preferably provide a plurality of contacts 14 in the form of fine wires preferably of a resilient material such as phosphor bronze, these being held in place in slots 16 cut into the contact carrying block 15. Holes 26 are drilled to allow the ends 14^1 to extend through the top of block 15 and these ends 14^1 form terminals for the contacts 14. The block 15 has a recess 17 cut into it the depth of the grooves 16 and also of a size to fit over the ridge 12^1 on the rail 12. The block 15 is fastened to the rail 12 in any suitable manner, preferably glued, and the contacts 14 thus rest between the top surface of the ridge 12^1 and the recess 17 thus securely holding the contact members 14 in place in the block 15, but allowing downward movement of the wires 14 in the slots 16. A common terminal strip 18 is fastened to the rail 12 and has terminals 19 fastened to it, these terminals receiving one terminal of the energizing winding 3, the other terminal of the winding being fastened to an individual terminal 20 fastened to the bottom of the rail 12.

The magnet upon energization attracts its armature 5 moving the contact arm 7 with it and the flared angular end 7^2 engages the resilient contact members 14 before the armature is fully actuated as shown in Fig. 4 of the drawing. Further attraction of the armature causes its end 7^2 to bear down the contacts 14 causing them to give slightly which produces a rubbing contact between the flared end 7^2 and the contacts 14, which rubbing produces a more positive engagement of the contacts and contacting end of the arm.

A number of relays may be mounted side by side upon a rail 12, and on account of

this narrow construction, it will be seen comparatively small centers may be used.

For the purpose of illustrating my invention I have shown an arrangement which has been worked out for commercial purposes, but I contemplate applying my invention in other ways than that shown. It will also be apparent that changes and modifications will readily occur to those skilled in the art, and therefore I do not desire to be limited to the exact structure as shown and described, but aim to cover all that which comes within the spirit and scope of the appended claims.

Having described my invention, what I claim as new and desire to secure by United States Letters Patent is:

1. A device of the character described comprising an electromagnet, a rail for supporting one or more of such magnets upon its side, a plurality of resilient contact members insulatingly mounted upon the top of said rail, a heel piece for said electromagnet attached to said rail and having its free end extending forward and beneath said electromagnet, an armature pivotally supported by said heel piece in front of said electromagnet, and a contact arm carried by said armature extending back above said electromagnet, and resilient members whereby when said electromagnet is energized said contact arm presses down upon and electrically connects said resilient members.

2. A device of the character described comprising an electromagnet, a rail for supporting said electromagnet, a block of insulating material provided with longitudinal slots mounted upon said rail, resilient contact members for said slots, means for attaching one end of said members to said block whereby their opposite ends are free to move vertically in said slots, an armature for said electromagnet, and a contact arm for said armature for contacting with said contact members.

3. A device of the character described comprising a mounting rail, an electromagnet attached to the side of said rail, a slotted block of insulating material mounted upon the top of said rail, resilient contact members adapted to fit into the slots of said block of insulating material and having free ends extending forward, and an armature and a contact arm for said magnet for engaging and electrically connecting said contact members.

4. A device of the character described comprising a mounting rail, an electromagnet attached to one side of said rail, a plurality of resilient contact members insulatingly mounted upon the top of said rail and having free ends extending toward the free end of said electromagnet, an angular armature pivotally supported by said heel iron at the free end of said electromagnet, adjusting means carried by said armature for regulating the air gap between the core of said electromagnet and said armature, and a contact arm rigidly attached to said armature and having a contact end extending back over said electromagnet into operative relation with said resilient contact members whereby when said electromagnet is energized said resilient contact members are electrically connected through said contact arm.

5. A device of the character described comprising a mounting rail, an electromagnet, an angular heel iron attached to said rail for supporting said electromagnet having its free end extending forward and beneath said electromagnet, resilient contact members mounted upon the top of said rail and having their free ends extending toward the free end of said electromagnet, an armature for said electromagnet pivotally supported by said heel iron, a contact arm rigidly attached to said armature having a contact end extending back over said electromagnet and said contact members, and means for energizing said electromagnet whereby said armature is attracted and said contact arm impinges down upon said resilient members in rubbing contact.

6. A device of the character described comprising a mounting rail, an electromagnet attached to the side of said rail, a heel iron for said electromagnet extending forward and beneath said electromagnet, a plurality of contact members insulatingly mounted upon the top of said rail and having free ends extending toward the free end of said electromagnet, an armature pivotally secured to said heel-piece, and an overhanging contact arm attached to said armature and extending back over said electromagnet and said contact members into operative relation with said contact members whereby when said armature is attracted said arm is brought down into engagement with said contact members.

Signed by me at Chicago, county of Cook and State of Illinois, in the presence of two witnesses.

WILLIAM KAISLING.

Witnesses:
GEORGE E. MUELLER,
M. R. ROCHFORD.