Nov. 21, 1933. N. P. PETERSEN 1,935,662

COIN SEGREGATOR

Filed April 22, 1929 3 Sheets-Sheet 1

Fig. 1.

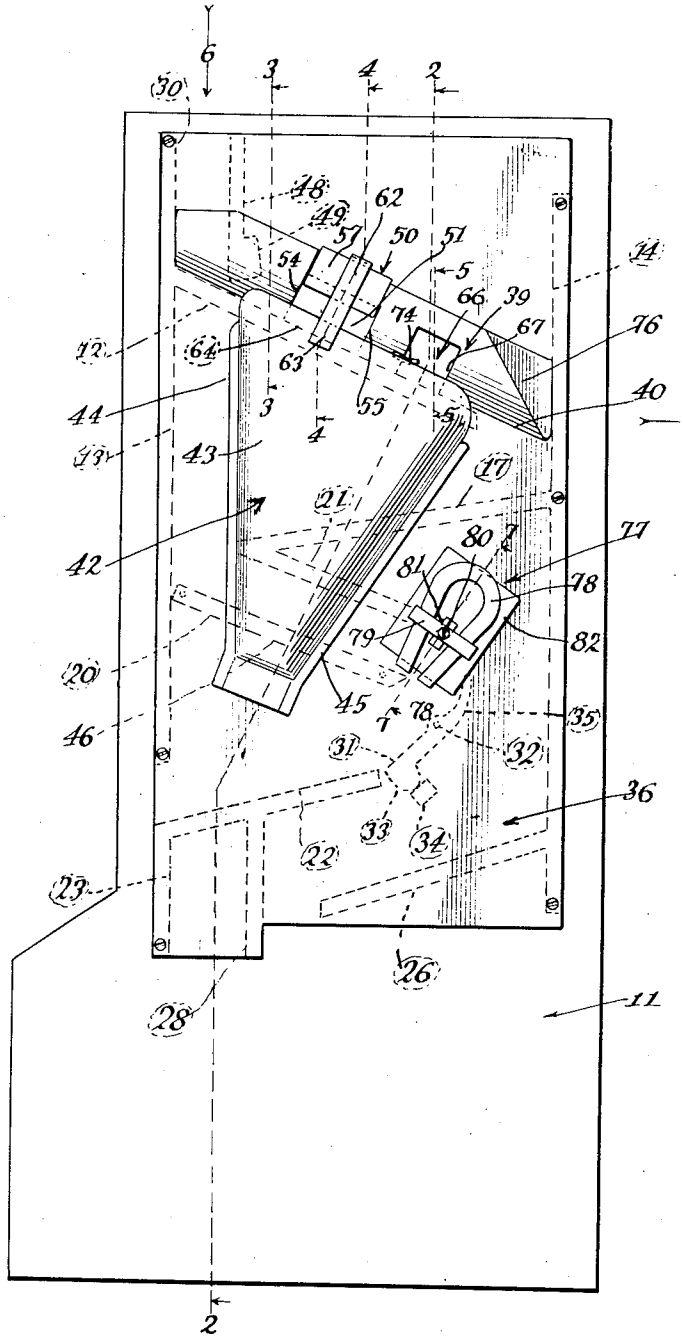

Fig. 2.

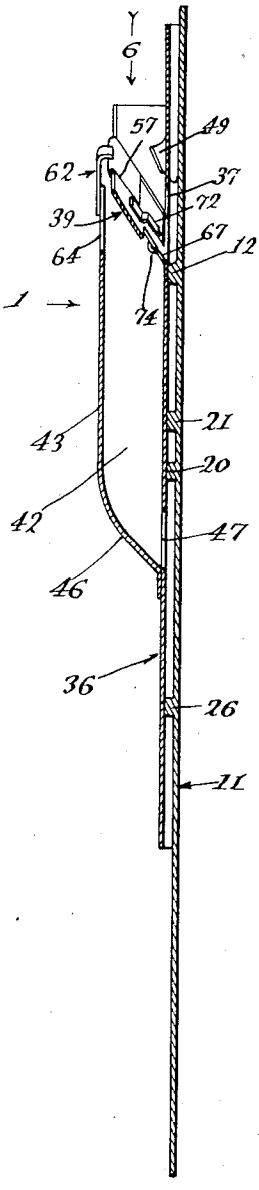

Inventor.
Nels P. Petersen
by Hazard and Miller
Attorneys.

Nov. 21, 1933. N. P. PETERSEN 1,935,662

COIN SEGREGATOR

Filed April 22, 1929 3 Sheets-Sheet 2

Fig. 3.

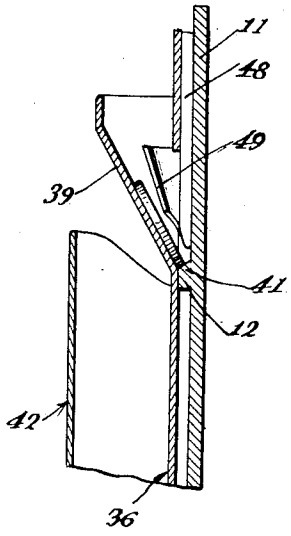

Fig. 4.

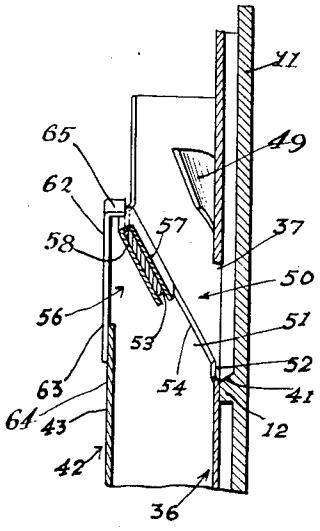

Fig. 5.

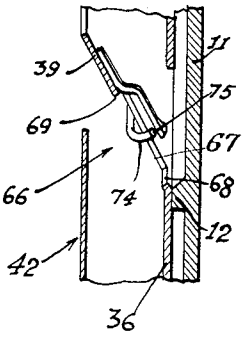

Fig. 6.

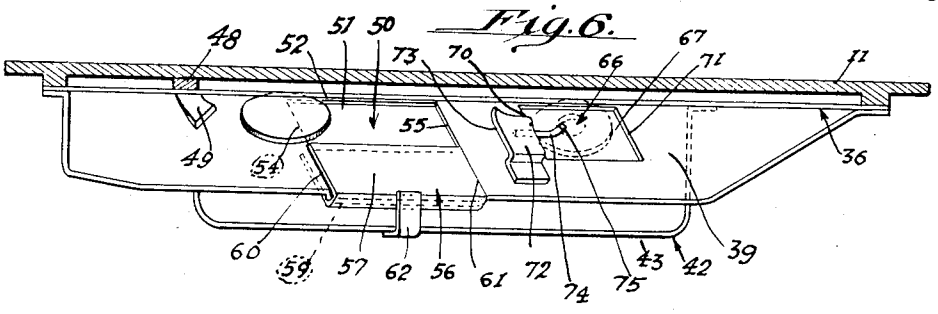

Fig. 7.

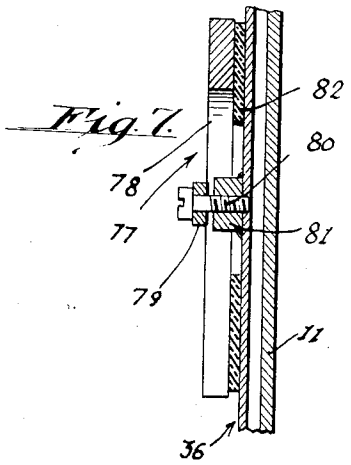

Inventor:
Nels P. Petersen
by Hazard and Miller
Attorneys.

Nov. 21, 1933.

N. P. PETERSEN

1,935,662

COIN SEGREGATOR

Filed April 22, 1929

3 Sheets-Sheet 3

Fig. 9.

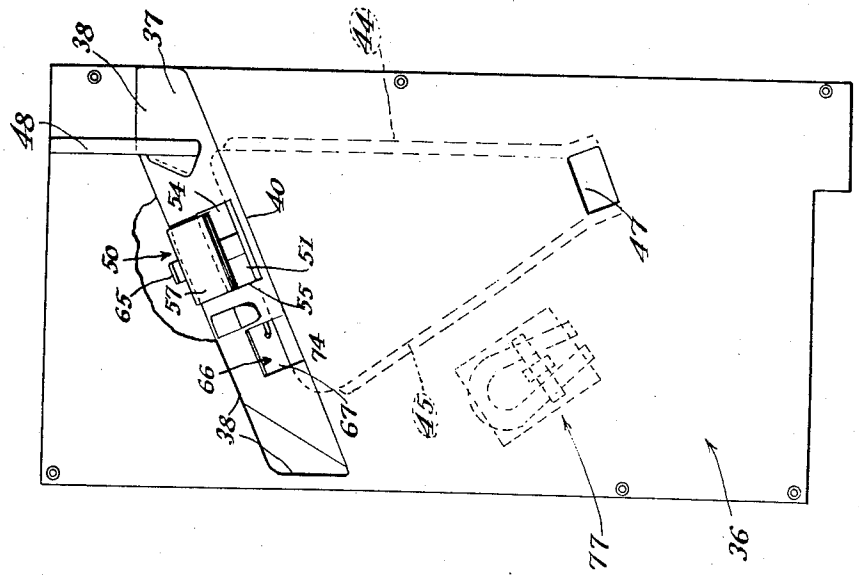

Fig. 8.

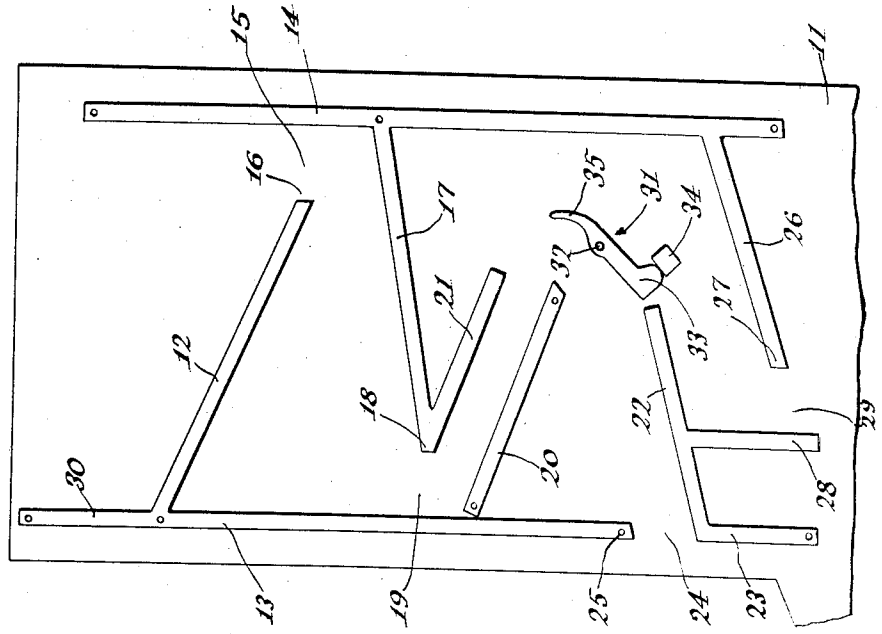

Inventor.
Nels P. Petersen.
by Hazard and Miller
Attorneys.

Patented Nov. 21, 1933 1,935,662

UNITED STATES PATENT OFFICE

1,935,662

COIN SEGREGATOR

Nels P. Petersen, Los Angeles, Calif., assignor to Antonettie M. E. Petersen, Los Angeles, Calif.

Application April 22, 1929. Serial No. 357,176

11 Claims. (Cl. 194—102)

My invention is what is designated as a coin segregator, that is a device to separate so-called slugs or spurious coins from legal coins and coins in good condition. The device is particularly adapted for connection with a coin operated or controlled machine.

An object of my invention is a coin segregator or slug ejector in which the slugs are separated from the coins while undergoing a continuous movement due to gravity and without any manipulation being undertaken by an operator or the person depositing the slug.

In this connection an object of my invention is in rolling slugs down a chute in which the direction of movement of the slug is changed and in various parts of the travel, slugs undersized in diameter are discharged from the coin chute into a slug chute. Slugs having a hole in the center are also separated and dumped into a slug chute. Slugs having a magnetic property are brought into the influence of a magnet and thus diverted from the coin chute.

In connection with the operation of the magnet, a still further object of my invention is utilizing a balance device which is struck by the coins and slugs which are brought into the influence of the magnet, the slugs having magnetic properties being retarded and the momentum being insufficient to overcome the balance, whereby they are directed into a slug chute, whereas the non-magnetic coins having their full velocity of travel overcome the balance and fall into a continuation of the coin chute.

A further detailed object of my invention is in a coin chute to tilt the coins and slugs whereby they run down an inclined chute partly on the peripheral edge and partly on one of the side faces. In this connection I separate the slugs undersized in diameter by rolling them past an opening so that the undersized slugs being inclined, tilt through this opening into a slug pocket connecting to a slug chute. This opening is provided with a slightly shiftable gate which has a limited movement to allow discharge of slugs having a certain variation in diameter but which will allow the passage of proper sized coins.

Another feature of operating the coins on a chute in which they roll partly on the periphery and partly on one face, is the ejector for the slugs having a central perforation. To discharge these I have an opening on the inclined structure against which the slug bears on one face and positioned in this opening is a hook-like pin. The tip of the pin supports the proper coin and allows it to roll past this opening, whereas the tip of the pin extends into the opening of a perforated slug and allows such slug to tilt through the opening into the slug pocket, thus traveling from the slug pocket to the slug chute.

In connection with the operation of the magnet, I preferably space the magnet from the coin chute by insulating or non-magnetic material and also preferably by a non-magnetic metal such as a brass plate. This is done in order to prevent direct contact of the slugs having magnetic properties with the magnet. The magnet is positioned adjacent the coin chute in a part of said chute where the coins run on their periphery and make a jump off the lower end of part of the chute.

My invention is illustrated in the accompanying drawings, in which,

Figure 1 is a side elevation of coin segregator or slug ejector which may be attached to a coin controlled vending machine, such figure being taken in the direction of the arrow 1 of Fig. 2;

Fig. 2 is an irregular vertical section on the line 2—2 of Fig. 1 in the direction of the arrow;

Fig. 3 is a detail enlarged vertical section on the line 3—3 of Fig. 1 in the direction of the arrows, showing the coin tilting device;

Fig. 4 is a detail vertical section on the line 4—4 of Fig. 1, showing the ejector for undersized slugs;

Fig. 5 is a vertical detail section on the line 5—5 of Fig. 1 in the direction of the arrows, showing the ejector for perforated slugs;

Fig. 6 is a detail partial plan view of the devices of Figs. 3, 4 and 5, taken in the direction of the arrows 6 of Figs. 1 or 2;

Fig. 7 is a detail section on the line 7—7 of Fig. 1 in the direction of the arrows, through the magnet;

Fig. 8 is an inside elevation of one of the plates having the guides or runways for the coins thereon;

Fig. 9 is an inside elevation of the complementary plate having the inclined track for the coins or slugs and the slug pocket and the magnet on the outside thereof.

The plate having the tracks is designated by the numeral 11 and illustrated in Figs. 1, 2 and 3. This plate is preferably flat and has an upper track 12. This is connected at its upper end to a vertical rib 13 adjacent one side of the plate. There is another vertical rib 14 adjacent the opposite edge of the plate. A space 15 is left between the end 16 of the track 12 and the rib 14. A next lower track 17 extends from the rib 14 in the opposite direction to the track 12 and

has its end 18 spaced from the rib 13 as indicated at 19. A third track 20 extends from the rib 13 in the same general direction as the track 12 and above this there is a guide rail 21 extending from the end 18 of the track 17 substantially parallel to the track 20. A fourth track 22 leads to a vertical rib 23, there being a space 24 between the end of the rib 22 and the lower end 25 of the rib 13. This space 24 is the discharge space for slugs.

A bottom track 26 extends from the rib 14 in the the same general direction as the track 17 and has its end 27 spaced from a vertical rib 28 depending from the track 22, leaving a space 29 for the discharge of proper coins. The coins are inserted adjacent the upper end 30 of the rib 13. A balance 31 is mounted on a pivot pin 32. This balance has a weighted end 33 normally resting on an abutment block 34 secured to the plate 11 and having a curved end 35 positioned slightly above the line formed by the upper edge of the track 20. This balance allows passage of proper coins by being struck thereby on the curved part 35 and allowing such coins to fall on the track 26. This balance cooperates with the magnet in the manner hereunder detailed.

The complementary plate 36 of the slug ejector is a flat plate with an opening 37 extending downwardly in a diagonal direction. The opening is preferably formed by slitting the metal on the line 38 and bending the slit portion outwardly forming an inclined supporting track 39. The lower edge 40 of this sloping track coincides with the upper edge of the track 12 and this portion has an angular bevel as indicated at 41.

A slug receiving pocket 42 is formed on the outside of the plate 36, by attaching a hollow-shaped metal plate 43. This plate is indicated as having a substantially vertical edge 44 and an inclined edge 45. The pocket has a curved bottom portion 46 and discharges through a lower opening 47 in the plate 36. This opening discharges slugs between the track 20 and 22 so that such slugs are discharged through the slug discharge space 24.

The tilting device for the coins and slugs utilizes a metal bar 48 attached to the plate 36 and having an inclined plate 49 which receives coins traveling down the upper portion of the track 12 on their periphery and tilts these on to the beveled edge 41 so that the coins travel on the inclined supporting track 39. (Note Figs. 3 and 9.)

The ejector for slugs undersized in diameter is indicated generally by the numeral 50. This comprises a substantially rectangular opening 51 in the inclined track 39, the lower edge 52 being slightly above the bevel 41 of the track 12, and the upper edge 53 being positioned so that the space between the edges 52 and 53 is insufficient for the passage of a coin of proper diameter but will allow passage of a slug undersized in diameter. The opening is sufficiently long from its upper edge 54 to its lower edge 55 to give sufficient time for a slug to be dropped in its travel downward by gravity.

A slipping gate 56 is mounted on the inclined track 39 and is formed of a U-shaped section of metal 57. The arms of the U fit on the inside and outside of the inclined track 39 and the base of the U fits over the upper edge 58 of the track 39. The plate 39 has a bent offset as indicated at 59 so that the joints 60 and 61 of the upper face of the gate and the upper face of the inclined track 39 are flush; thus preventing any stoppage of a coin sliding from the track 39 on to the upper arm of the U-shaped gate or in passing there off at the lower edge. A metal clip 62 has its lower end 63 attached to the upper portion 64 of the slug pocket and has a horizontal flange 65 which engages the upper end of the U-shaped gate and restricts its movement.

In constructing the ejector for undersized slugs and coins the beveled portion 41 of the track 12 should be of a width to allow free rolling of a newly minted coin on its peripheral edge without such coin binding against the lower portion of the inclined plate 39 or the plate 11. The distance from the bevel 41 to the upper fixed edge 53 of the opening should be slightly less than the diameter of a good coin so that such proper coin may be passed by the opening without falling through. The gate 56 has its lower edge slightly overlapping the opening and is freely slidable so that it may readily be pushed upwardly to the full extent of the opening 51.

The action of this slug ejector for slugs undersized in diameter is as follows: Such slugs rolling down on their peripheral edge on the bevel 41 and the inclined surface 39, if sufficiently small in diameter pass between the edge 52 and the lower edge of the gate. A proper sized coin rolls over this space without passing through. Such slugs as above mentioned fall into the slug pocket and from thence on to the slug ejecting track 22 and to the slug ejecting opening 24, whence they may be returned to the party who deposited the slug.

As the beveled portion 41 of the track 12 must be of sufficient width to allow free running on its periphery of a newly minted coin, which coin usually has a burr, manifestly, such track is wider than is necessary for a coin which is worn as to its thickness. Hence, coins and slugs which are thinner than the standard may not roll absolutely flat on the inclined plate 39 but may be slightly tilted with their rolling edge being against plate 11. This slight tilting would cause slugs and coins which are undersized to engage the lower edge of the gate and force this upwardly sufficiently to drop these through the opening. The gate projecting slightly over the upper edge of the opening carries coins which are newly minted and those only slightly worn through the machine.

When the gate 56 is in its lowermost position the distance between the bottom of the upper side of the plate 57 and the bevel track 41 is equal to or slightly less than the diameter of a slightly worn coin. If the opening were of an absolutely fixed width, a worn coin or a slug which was of substantially the same diameter as the width from the track to the top of the opening might wedge in the opening and not pass through, but where the gate can move upwardly, the worn coin or slug thrusts the gate upwardly slightly sufficiently to allow dropping of such worn coin or slug. The peripheral edge of the coin engages underneath the edge of the plate 57. This gives a refinement to my machine and prevents the blockage of the opening by worn coins or slugs which might jam in the opening for disposing of undersized coins or slugs.

The lower edge 52 of the opening, it will be noted, is above the beveled track 41. Therefore, this edge of the opening forms a tilt point for the tilting of undersized coins or slugs and the dropping of these through the opening.

The separator for perforated slugs is con-

structed as follows, having reference particularly to Figs. 1, 2, 5, 6 and 9: This ejector for perforated slugs is designated generally by the numeral 66 and has an opening 67 in the inclined track 39. This opening is of sufficient height between its lower edge 68 and its upper edge 69 to allow passage of both slugs and proper sized coins. It also has sufficient space between the entrance edge 70 and the discharge edge 71 for the passage of slugs or proper sized coins into the slug pocket. A guide plate 72 is secured to the inclined track 39 and has an upturned edge 73 to guide coins and slugs towards this opening 67. A pin 74 is secured to the inclined track 39 preferably on the undersurface and has a tip end 75 projecting partly through the opening 67, such tip being substantially in the center of the opening 67 considered between its lower and upper edges 68 and 69.

The action of the slug ejector for perforated slugs is as follows: Presuming an unperforated slug or a proper coin is rolling down the chute inclined on its periphery and on one flat side, the pin guides such slug or coin past the opening 67. However, if a slug having a central perforation is rolling down the chute, the top of the pin slips through the perforation and allows tilting of such slug so that in its continued movement the slug passes through the opening 67. In this operation the slug is moving quite fast and the pin does not positively hook the slug but merely allows its diversion from lack of a support. Such perforated slug is thus deposited in the slug pocket 42 and from thence dumped on the track 22 through the opening 47 and discharge through the slug discharge space 24.

The proper coins and full size slugs which have passed the two diverters such as the undersized slugs and the perforated slugs are brought into an upright position by a curved portion 76 of the inclined track 39 adjacent its lower end. Such coins and slugs pass through the space 15 at the end of the track 12 and thence drop on the track 17, rolling in reverse direction and then passing through the space 19 on to the track 20, thence down the track 20 to the diverter for magnetic coins designated generally by the numeral 77. This diverter comprises a horse shoe magnet 78 which is secured by a strap 79 and a bolt 80 the bolt being threaded on the block 81 welded to the plate 36, there being an insulating plate 82 between the magnet and the plate 36. This insulating material is preferably diamagnetic and the metal plate 36 is preferably of non magnetic material such as brass. The poles of the horseshoe magnet are preferably positioned adjacent the lower ends of the track 20 and the parallel guide 21 and positioned slightly above the balance device 31.

The action of the magnetic diverter is as follows: When a slug having magnetic properties is rolling down the track 20 downwardly by the action of gravity, this slug comes under the magnetic influence of the magnet and is slightly retarded in its velocity. Therefore even if this slug is the same weight as a proper coin, its momentum in striking the curved part 35 of the balance 31 is insufficient to tilt this balance sufficiently to discharge such slug on the track 26, but the slug rolls downwardly on the weighted end 33 of the balance and on to the track 22 and thence through the opening 24 for slugs. However, a proper coin of the proper weight has sufficient momentum that in striking the balance it tilts the balance so that the coin its dropped on to the track 26 and is thence discharged through the opening 29 into a suitable coin receiving device. Such coin receiving device preferably leads to a coin controlling mechanism for some purpose or other.

It will thus be seen that I have developed a coin segregator or slug ejector which requires no manual manipulation and ejects slugs which are undersized in diameter, those which have central perforations and those which have magnetic properties, even if the latter are of the proper diameter and proper weight and have passed the two upper slug diverters.

While my coin segregator is particularly designed to operate with a vending machine such as set forth in my patent application Serial No. 357,148 filed April 22, 1929, it is to be understood that it may be applied to general use in which it is desired to separate slugs or worn or underweighted coins from proper coins.

Various changes may be made in the principles of my invention without departing from the spirit thereof as set forth in the description, drawings and claims.

I claim:

1. In a device as described, a runway for coins having a track with the coins to run on their periphery, an inclined supporting track, means to tilt the coins to bear on one face on said inclined track, the inclined track being formed of a plate with an opening therein, and said opening being adapted to divert coins or slugs undersized in diameter, a gate structure formed of a U-shaped device fitted over the upper edge of the plate forming the inclined track, the lower edge of the gate being adapted to be engaged by coins or slugs slightly undersized and shifted by such coins or slugs to allow diversion thereof.

2. In a device as described, a pair of substantially parallel, vertical plates spaced apart, and with a runway for running coins on their periphery between the plates, one of the plates having a laterally inclined section with an opening, a tilting plate positioned above the inclined section to positively tilt coins to rest on the inclined section, a freely shiftable gate structure forming a partial closure for said opening and being movable by a slightly undersized coin or slug to divert said coin or slug through the opening.

3. In a device as described, a runway for running coins on their periphery having an inclined plane plate at one side of the runway, with an opening therein, a tilting plate above the inclined plate to tilt coins to lie on the inclined plate, the inclined plate having a freely slidable gate structure forming a partial closure for the opening, and shiftable by slightly undersized coins to divert same through the said opening.

4. In a device as described, a pair of vertical, parallel plates spaced apart and having a runway for running coins on their periphery, one of the plates having a laterally inclined plane section with an opening therein to divert coins or slugs of undersized diameter, a slug pocket to receive such undersized slugs or coins, a second runway below the said opening to receive slugs from the slug pocket and discharge undersized coins or slugs, the inclined section of the plate having a freely slidable gate structure forming a partial closure for the opening, said structure being shifted by slightly undersized coins and slugs.

5. In a device as described, a track for rolling coins on the periphery, said track being of sufficient width to accommodate a newly minted coin, a laterally inclined plane plate extending to

one side of said track to be engaged by the side of the coin, said plate having an opening, a freely slidable gate mounted on the plate and having its lower edge normally projecting slightly below the upper edge of the opening.

6. In a device as described, a track forming a runway for rolling coins on their periphery, said track being of sufficient width to accommodate a newly minted coin, a laterally inclined supporting plate having an opening with an upper edge parallel to the track to be engaged by the side of the coin, a freely slidable gate mounted on the supporting plate and having its lower edge project slightly below the upper edge of said opening, said plate being laterally offset, and the surface of the gate being flush with the surface of the supporting plate.

7. In a device as described, a downwardly sloping track having a beveled portion, the beveled portion being sufficient to accommodate a newly minted coin rolling on its edge, a laterally inclined plane supporting plate having a rectangular opening therein, the upper and lower edge of said opening being parallel to the beveled portion of the track, a gate freely shiftably mounted on said plate and having its lower edge normally projecting slightly below the upper edge of said opening to be shifted by a slightly undersized coin or slug, and a tilting plate secured in a position above the opening to positively tilt coins to bear on said inclined plate.

8. In a device as described, a track having a laterally inclined bevel for rolling coins on their periphery, a laterally inclined plane plate extending to one side of said track against which the coin bears on its side, said plate having an opening with an upper edge parallel to the track, a freely slidable gate mounted on the plate and having its lower edge projecting normally slightly below the upper edge of said opening, the lower edge of the gate being parallel to the track, the distance between the lower edge of the gate and the track being substantially equal to or slightly less than the diameter of a coin worn in diameter, said gate when engaged by a slightly undersized coin or slug being adapted to freely slide on the plate to drop such coin or slug through said opening, the lower edge of the opening being positioned above the beveled track and being adapted to form a tilting point for the tilting of slugs and coins passing through said opening.

9. In a device as described, a track forming a runway for rolling coins on their periphery, a laterally inclined plane surfaced supporting plate adjacent the track, said track having a bevel at substantially right angles to the incline of the plate, said plate having a laterally offset section with an opening therethrough having parallel upper and lower edges, the lower edge being slightly above and parallel to the track, and a freely slidable gate mounted on the supporting plate in the offset section and having a lower edge projecting slightly below the upper edge of the opening in the plate, the upper surface of the gate and of the said supporting plate being flush.

10. In a device as described in claim 9, and a fixed stop clip positioned to engage the gate and limit the upward sliding of such gate.

11. In a device as described, a track having a runway for rolling coins on their periphery, a portion of the track being beveled, a laterally inclined supporting plate extending upwardly from the track at substantially right angles to the beveled section, said plate having a laterally offset section with an opening having upper and lower parallel edges, the lower edge being above the beveled portion of the track and parallel thereto, a U-shaped gate mounted in the offset section and having one side of the U above and the other below the plate, the lower edge of the gate being slightly below the upper edge of the opening, and the upper surface of the gate being flush with the supporting plate adjacent the offset section.

NELS P. PETERSEN.