No. 714,624. Patented Nov. 25, 1902.

J. R. TURNER.

APPARATUS FOR MOISTENING AND CLOSING THE ADHESIVE FLAPS OF ENVELOPS, &c.

(Application filed July 25, 1902.)

(No Model.) 2 Sheets—Sheet 1.

Fig 1.

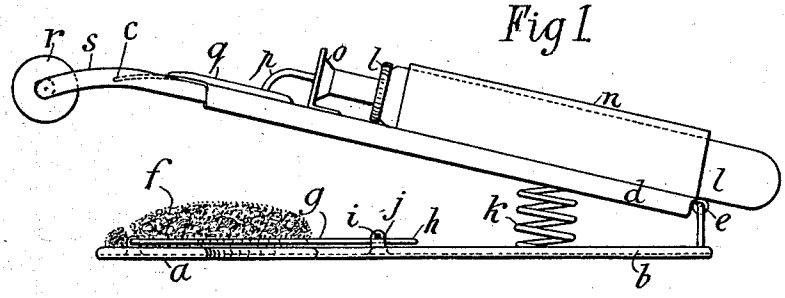

Fig. 2.

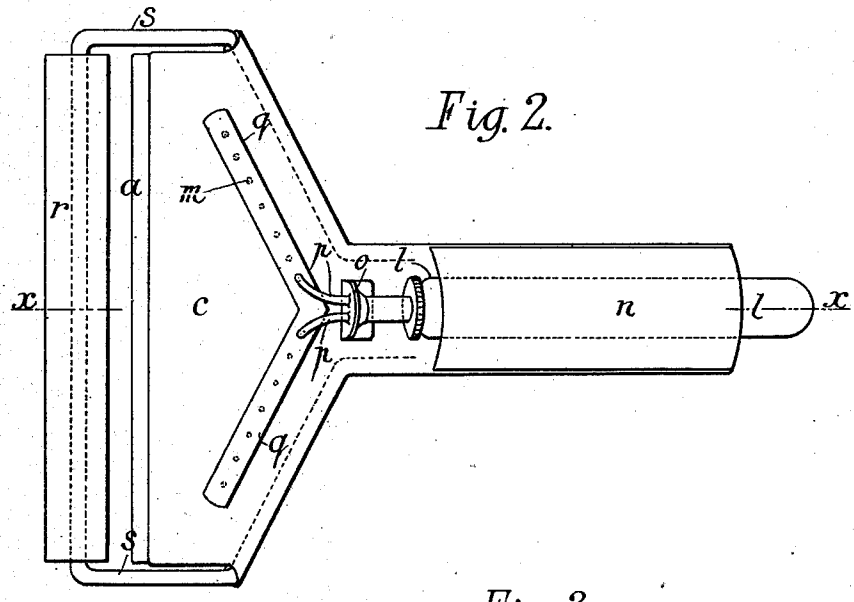

Fig. 3.

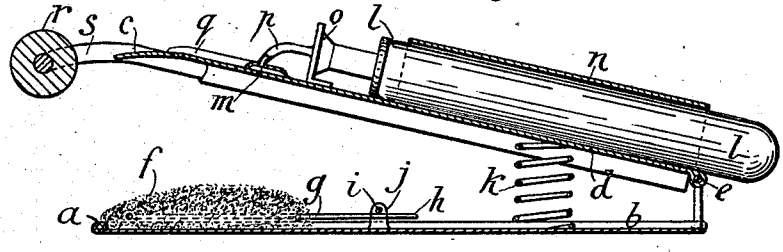

Witnesses:
Dennis Sumby.
W. B. Hedges

Inventor
John R. Turner
By James L. Norris.
Atty.

THE NORRIS PETERS CO., PHOTO-LITHO., WASHINGTON, D. C.

No. 714,624. Patented Nov. 25, 1902.

J. R. TURNER.

APPARATUS FOR MOISTENING AND CLOSING THE ADHESIVE FLAPS OF ENVELOPS, &c.

(Application filed July 25, 1902.)

(No Model.) 2 Sheets—Sheet 2.

Fig. 4.

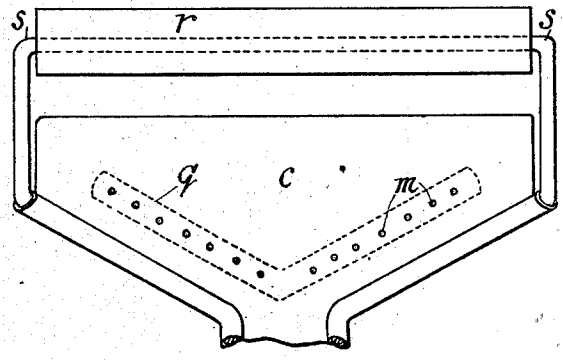

Fig. 6.

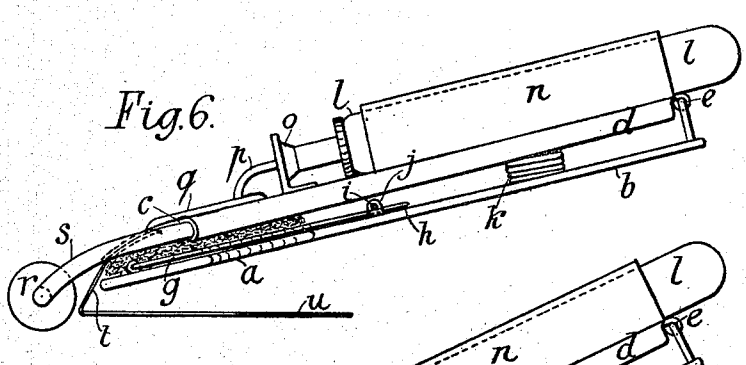

Fig 7.

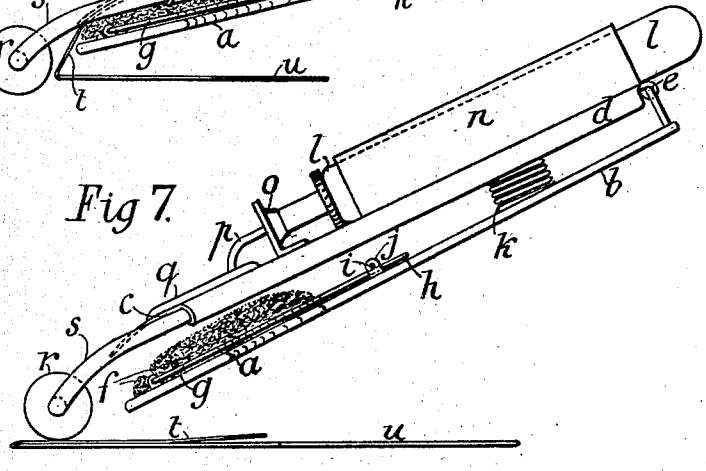

Fig. 5.

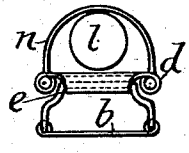

Witnesses:
Dennis Sumby.
W. B. Taylor

Inventor
John R Turner
By James L. Norris
Atty.

THE NORRIS PETERS CO., PHOTO-LITHO., WASHINGTON, D. C.

UNITED STATES PATENT OFFICE.

JOHN ROBERT TURNER, OF STOWMARKET, ENGLAND.

APPARATUS FOR MOISTENING AND CLOSING THE ADHESIVE FLAPS OF ENVELOPS, &c.

SPECIFICATION forming part of Letters Patent No. 714,624, dated November 25, 1902.

Application filed July 25, 1902. Serial No. 116,995. (No model.)

To all whom it may concern:

Be it known that I, JOHN ROBERT TURNER, a subject of the King of Great Britain and Ireland, residing at Stowmarket, in the county of Suffolk, England, have invented a certain new and useful Apparatus for Moistening and Closing the Adhesive Flaps of Envelops, Postal Wrappers, and the Like, of which the following is a specification.

This invention relates to apparatus for moistening and closing the adhesive flaps of envelops, postal wrappers, and the like; and it has for its object to avoid the necessity of having to use one's tongue to moisten the gum on the flap, which, as is well known, is both injurious and objectionable.

To this end the apparatus consists, substantially, of means for containing water or other suitable liquid, means for moistening the gum on the flap of the envelop or the like, and means for closing the flap by pressing it down onto the body of the envelop, the said means or instrumentalities being so combined and arranged as to form a simple apparatus capable of being readily operated by hand.

In order that the invention may be clearly understood, the same will now be fully described with reference to the accompanying drawings, in which—

Figure 1 is a side elevation, and Fig. 2 a plan of the apparatus. Fig. 3 is a longitudinal vertical section taken on the line x x of Fig. 2. Fig. 4 is an inverted plan of the presser-plate. Fig. 5 is an end view of the rear portion of the apparatus, and Figs. 6 and 7 are side elevations showing the application of the apparatus.

In carrying out the invention there is provided a base-plate a, terminating in a handle b, and a presser-plate c, terminating in a handle d. These two handles are hinged together at e in any convenient manner and are grasped together when manipulating the apparatus, as hereinafter described. On the base-plate a is laid a detachable pad f of appropriate absorbent material—for instance, sponge—which is held in place by any convenient means, say by a hinged wire clamp g, following the form of the said plate and terminating at its free end in a stem h, by means of which it can be secured in position by a pin i passing through eyes in lugs j. This construction allows of the wire clamp being readily released when it is desired to cleanse the absorbent pad or to introduce a fresh one. Between the handles b and d of the base-plate a and the presser-plate c is a spring k, the purpose of which is to keep the presser-plate normally away from the pad f. To the presser-plate is secured a reservoir l, containing water, a portion of which can be discharged as desired through perforations m in the said presser-plate onto the pad f. A convenient arrangement of reservoir for this purpose is shown in the drawings and consists of a plunger-cylinder located in a hood or housing n, fixed to the handle d of the presser-plate. This reservoir is constructed like the well-known type of pocket-oiler ordinarily used for type-writers or for cycles, and from its stationary nozzle o the water is supplied to distributing-tubes p, leading into channels q above the perforations m in the presser-plate. Thus when the pad f becomes too dry it can at any time be moistened by operating the plunger-cylinder in the well-known manner. The reservoir in itself, however, forms no part of this invention, as any other form, such as a syringe or a vessel with a depressible portion, may be adopted, it being esssential only to provide a means for readily and adequately moistening the pad b when required.

In advance of the presser-plate is a roller r, preferably covered with some resilient material and mounted in a frame s, carried by the said presser-plate. The purpose of this roller is to press down the moistened gummed edge of the flap t onto the body of the envelop u or the like.

To use the apparatus, an envelop u, for example, is laid with its face downward and its flap t upturned. The apparatus is then applied, so as to receive the flap between the pad f and the presser-plate c by holding it at a slight incline, as indicated in Fig. 6. The two plates a and c are then momentarily pressed toward each other by means of their handles, thereby causing the flap to be moistened, and they are then immediately released. The apparatus is thereupon still further inclined, as indicated in Fig. 7, and is then drawn bodily, along with its presser-roller r, over the flap, which latter gradually escapes and is at once closed down and firmly secured,

by means of said presser-roller, onto the body of the envelop.

Having now described my invention, what I claim, and desire to secure by Letters Patent, is—

1. In an apparatus of the character described, the combination of a base-plate provided at one end with a moistening-pad, a presser-plate pivoted to the other end of the base-plate, a reservoir carried by said presser-plate, means for conveying liquid from the reservoir to the presser-plate and from the latter to the moistening-pad, a presser-roller supported by the presser-plate, and means for normally holding the base-plate and presser-plate separated, substantially as described.

2. In an apparatus of the character described, the combination of a base-plate provided at one end with a moistening-pad, a hinged clamp for detachably holding the pad in place on the base-plate, a presser-plate pivoted to the other end of the base-plate and provided with perforated channels for distributing liquid to the moistening-pad, a reservoir carried by the presser-plate, means for conveying liquid from the reservoir to the presser-plate, a presser-roller carried by the presser-plate, and means for normally holding the base-plate and presser-plate separated, substantially as described.

3. In an apparatus for the purpose set forth, the combination of a base-plate having a handle at one end and a moistening device at the other, a presser-plate having a handle pivoted to the base-plate, a reservoir carried by said presser-plate and adapted to discharge water through perforations in said plate onto the moistening device, and a presser-roller for closing the moistened flap of the envelop, or the like.

4. In an apparatus for the purpose set forth, the combination of a base-plate carrying at one end a moistening device and provided at its other end with a handle, a pivoted presser-plate for pressing the flap of an envelop, or the like, onto the moistening device, and a reservoir carried by said presser-plate, the presser-plate being furnished with orifices through which water from the reservoir is discharged onto the moistening device, and a presser-roller placed in advance of the moistening device and carried in a frame connected to the presser-plate.

5. In an apparatus for the purpose set forth, the combination of a base-plate carrying a moistening device, a perforated presser-plate articulated to said base-plate, a presser-roller and a reservoir both carried by said presser-plate, and a spring interposed between said base-plate and said presser-plate to keep the presser-roller normally raised.

6. In an apparatus for the purpose set forth, the combination of a base-plate carrying a moistening device, a presser-plate articulated thereto, a reservoir adapted to discharge water, a presser-roller, and a clamping device for securing the moistening device to the base-plate.

7. An apparatus for the purpose set forth, comprising a base-plate carrying at one end an absorbent pad and terminating at the other end in a handle, a presser-plate terminating in a handle articulated to the base-plate, a presser-roller carried in a frame secured to the presser-plate, and arranged in advance of the absorbent pad, a reservoir carried on the handle of said presser-plate, which latter is furnished with orifices on its under side through which water is discharged from tubes leading from the said reservoir, means for retaining said pad in position, and a spring interposed between the base-plate and the presser-plate to keep the presser-roller normally raised.

In witness whereof I have hereunto signed my name in the presence of two subscribing witnesses.

JOHN ROBERT TURNER.

Witnesses:
GEORGE E. MINTERN,
WALTER J. SKERTEN.