F. TRINKS.

CALCULATING MACHINE.

APPLICATION FILED AUG. 18, 1913.

1,081,791.

Patented Dec. 16, 1913.

4 SHEETS—SHEET 1.

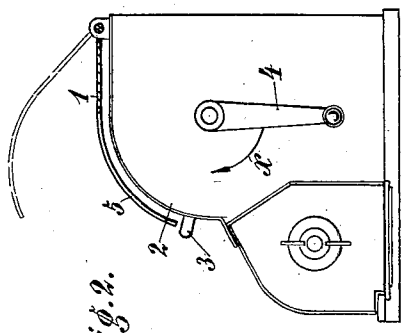

Fig. 2.

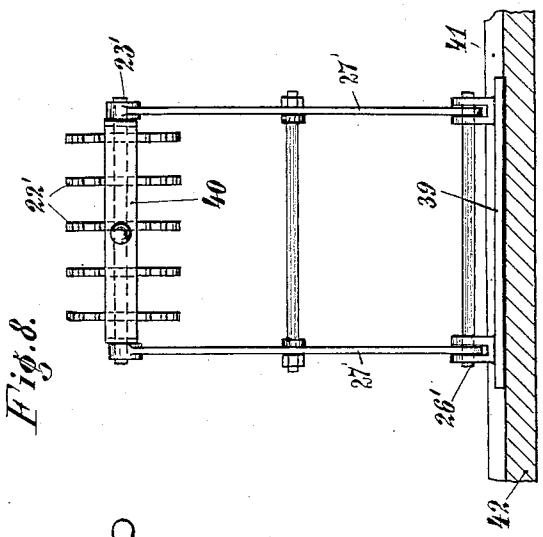

Fig. 8.

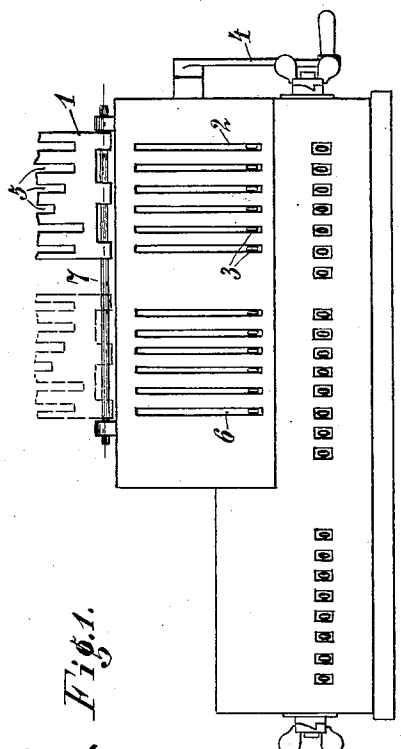

Fig. 1.

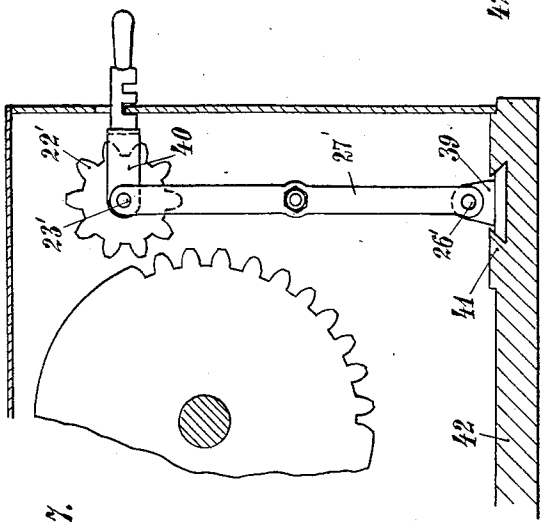

Fig. 7.

Witnesses:

M. E. McNabb

Inventor

Franz Trinks

by

James L. Norris,

Attorney.

COLUMBIA PLANOGRAPH CO., WASHINGTON, D. C.

F. TRINKS.

CALCULATING MACHINE.

APPLICATION FILED AUG. 18, 1913.

1,081,791.

Patented Dec. 16, 1913.

4 SHEETS—SHEET 2.

Fig. 3.

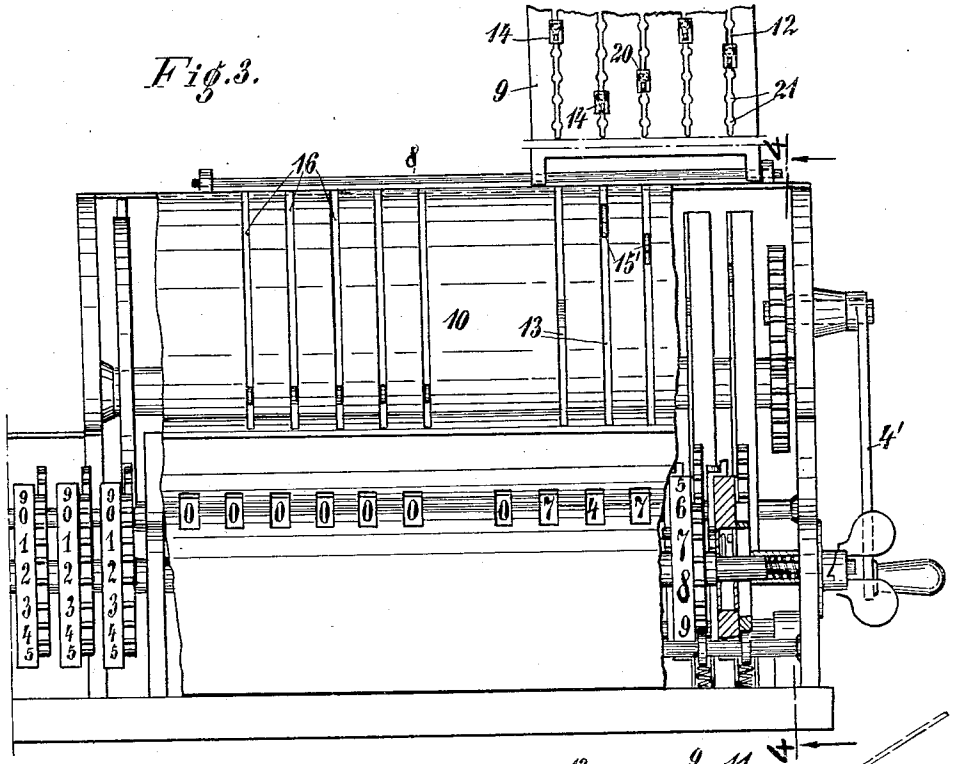

Fig. 4.

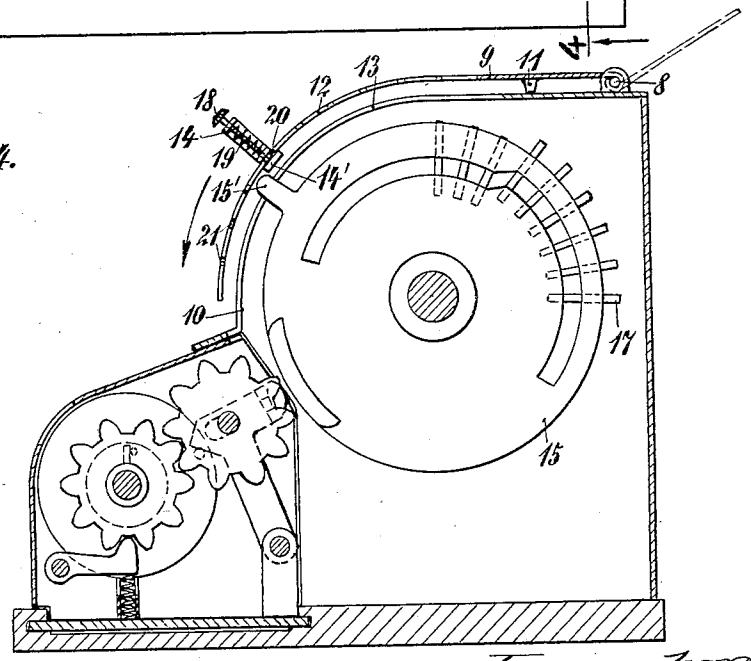

Witnesses:

M. E. McNabb.

C. F. Keller

Inventor

Franz Trinks

By James L. Norris,

Attorney

F. TRINKS.

CALCULATING MACHINE.

APPLICATION FILED AUG. 18, 1913.

1,081,791.

Patented Dec. 16, 1913.

4 SHEETS—SHEET 3.

Fig. 5.

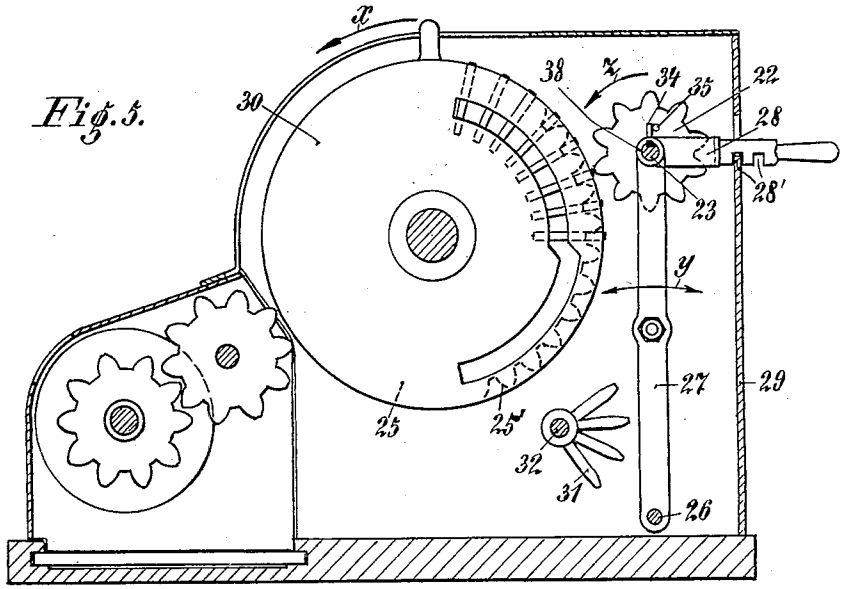

Fig. 6.

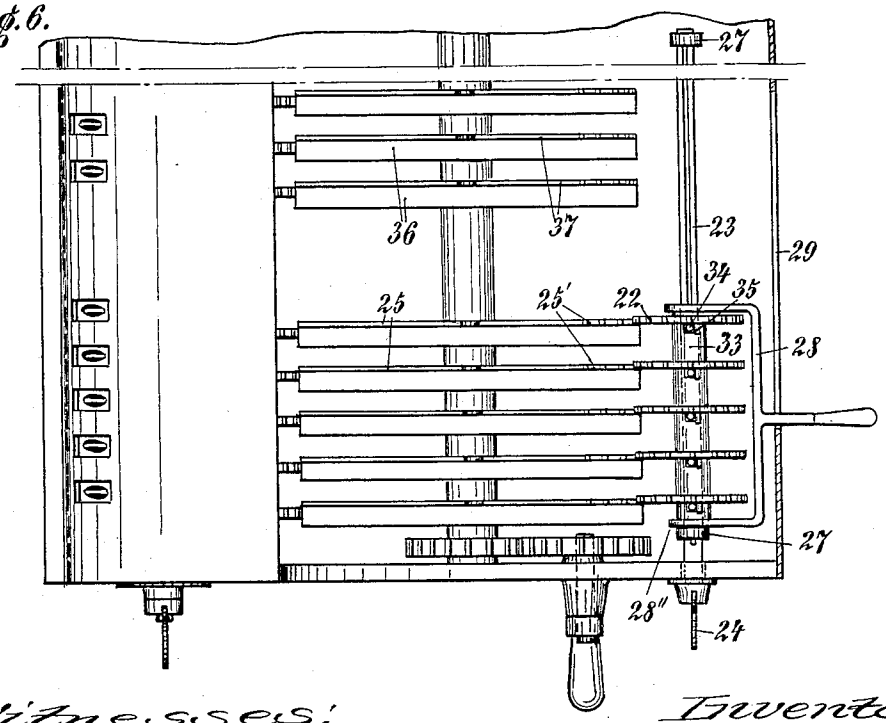

Witnesses:

M. E. McDade

C. D. Kesler

Inventor

Franz Trinks

by

James L. Norris,

Attorney

COLUMBIA PLANOGRAPH CO., WASHINGTON, D. C.

F. TRINKS.

CALCULATING MACHINE.

APPLICATION FILED AUG. 18, 1913.

1,081,791.

Patented Dec. 16, 1913.

4 SHEETS—SHEET 4.

Fig. 9.

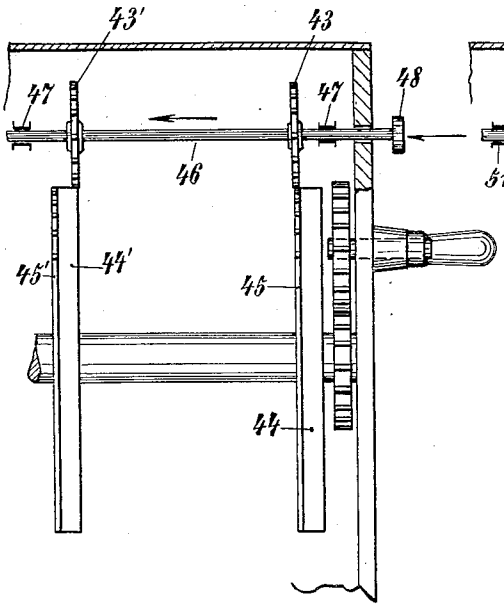

Fig. 10.

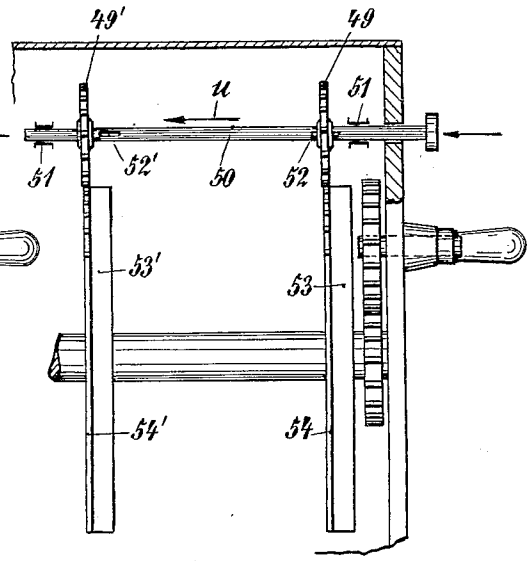

Fig. 11.

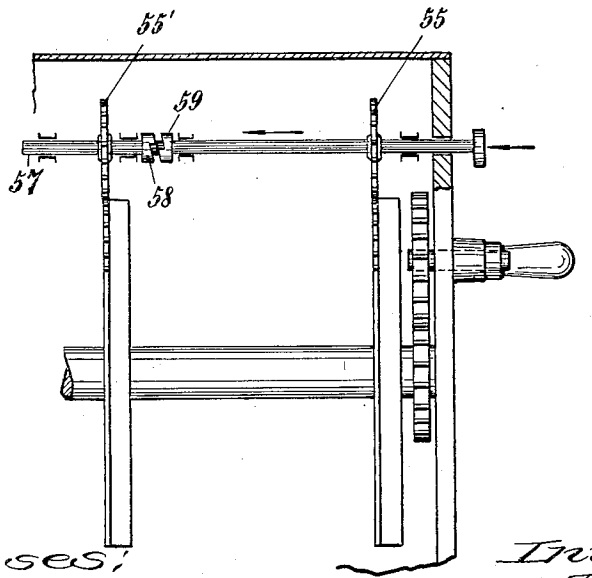

Witnesses:

M. E. McKade

Inventor

Franz Trinks

by James L. Norris,

Attorney

COLUMBIA PLANOGRAPH CO., WASHINGTON, D. C.

UNITED STATES PATENT OFFICE.

FRANZ TRINKS, OF BRUNSWICK, GERMANY.

CALCULATING-MACHINE.

1,081,791. Specification of Letters Patent. Patented Dec. 16, 1913.

Application filed August 18, 1913. Serial No. 785,369.

To all whom it may concern:

Be it known that I, FRANZ TRINKS, manufacturer, citizen of the Duchy of Brunswick, Empire of Germany, residing at Brunswick, Germany, have invented certain new and useful Improvements in Calculating-Machines, of which the following is a specification.

My invention relates to improvements in calculating machines, and more particularly in calculating machines in which the setting mechanism consists of setting disks carrying radially shiftable teeth which are adapted to be set in operative positions by means of cam disks mounted coaxially of the setting disks. Machines of this type are described for example in the patents of the United States No. 928,083, granted to me July 13, 1909, No. 953,242, granted to me March 29, 1910, and No. 1,040,059, granted to me October 1, 1912. In machines of this type the setting of the values on the setting disks prior to transmitting the same to the registering mechanism is a rather inconvenient and tedious operation, because each cam disk must be separately set by the hand of the operator. Besides the method of setting the disks is liable to cause errors in the calculation. In many calculations the same number must several times be set on the setting disks. Therefore the operation of the calculating machine is simplified by apparatus by means of which the said number can easily be set on the setting disks in a mechanical way after once setting the same. This method also increases the chance of avoiding errors. Machines of this construction are described in my German Patent Nr. 181,681, filed July 18, 1906. In these machines the cam disks are automatically set by means of stop members which are adapted to be placed in the paths of the finger pieces of the cam disks provided for setting the same, which stop members arrest the cam disks which take part in the rotation of the machine crank, so that the setting disks which continue their rotations with the crank perform movements relatively to the machine crank. Furthermore calculating machines of this general type have been constructed in which two independent setting mechanisms are provided. Machines of this type are described in an application for patent of the United States filed by me December 31, 1912, Serial Number 739,494.

The object of the improvements is to equip a calculating machine of this last named construction with the aforesaid apparatus for speedily setting numbers or with similar devices for receiving and keeping certain values, so that a number which has been set in one of the setting mechanisms can at any time be set in the second or any other setting mechanism.

With this object in view my invention consists in so constructing and arranging the said known or any preferred apparatus for speedily re-setting a number on the same setting mechanism, that after receiving the number set in the first setting mechanism it is adapted to be brought into position for coöperation with a second setting mechanism and to set the value thereon.

For the purpose of explaining the invention several examples embodying the same have been shown in the accompanying drawings, in which the same letters of reference have been used in all the views to indicate corresponding parts.

In said drawings—Figure 1, is a diagrammatical front view of a calculating machine designed for explaining the principle of the invention, Fig. 2, is a side view of Fig. 1, Fig. 3, is a front view partly in section of a calculating machine embodying the invention, Fig. 4, is a cross-section of Fig. 3 taken on the line 4—4, Figs. 5 and 6, are respectively a cross-section and a plan view of a modification of the calculating machine, Figs. 7 and 8, are two different cross-sections of a modification of the calculating machine shown in Figs. 5 and 6, and Figs. 9 to 11, are plan views of further modifications of the invention.

Referring to the diagrammatical view shown in Figs. 1 and 2, the calculating machine is equipped with a toothed plate 1 representing a single value, the notches of the plate corresponding to the numbers which are adapted to be set on the setting disks of either one of the setting mechanisms. The plate is adapted to be placed over either one of the setting mechanisms after setting all the finger pieces 3 of the cam disks in their "nine" positions. If now the crank is turned to the right or in the direction of the arrow x shown in Fig. 2, the finger pieces get into the notches 5 of the plate 1 and they can move only to the ends of the said notches. Thereby by one operation the value represented by the plate 1 is set on the setting mechanism. The plate 1 is shiftably

mounted on the machine casing, for which purpose it is hinged to and longitudinally slidable on a rod 7 mounted on the upper rear margin of the casing, and it can be shifted along the said rod to the second setting mechanism 6 and placed on the same, so that the same number can be set on the second setting mechanism. Figs. 3 and 4 show an example in which this principle is put into effect. As shown in the said figures, on the rear upper margin of the machine casing a rod 8 is provided, on which a plate 9 is mounted the curved form of which corresponds to the cover 10 of the casing. For the matter of clearness I have shown this plate in rocked position. When placed on the cover of the casing the said plate bears on the said cover by means of feet 11. The plate is formed with slots 12 which correspond to the slots 13 of the cover of the casing. In each slot 12 a slide 14 has a sliding support which provides the stop member for the coöperating finger piece 15′ of the coöperating cam disk 15. When shifting the said slides in the direction of the arrow shown in Fig. 4 knobs 14′ formed at the bottom ends of the said slides strike against the finger pieces 15′ and carry the same along. Thereby the cam disks 15 and the teeth of the setting disks controlled thereby are set. On the other hand the teeth 17 can also be set by rotating the crank 4′ of the machine. The stop members or slides 14 are adapted to be set on the plate in different positions. Thereby any desired number can be set in the manner described. For locking the stop members in the set positions on the plate 9 locking means may be provided, which in the example shown in the figures consist of a button 18 adapted to be depressed by the hand of the operator and connected with the knob 14′ of the slide and normally forced outward by a spring 19, so that a pin 20 connected with the knob 14′ engages in an enlarged portion 21 of the slot 12 or in a notch of the plate 9 and locks the slide in position. By depressing the button 18 the slide 14 is released, so that it can be shifted. The plate 9 is shiftably mounted on the rod 8, so that it can be brought into position for coöperation with a second setting mechanism 16 which is disposed coaxially of the first named setting mechanism and which is constructed in the same way as the latter. Therefore plate 9 can be used as a means for transmitting a value from one setting mechanism to the other.

In the example shown in Figs. 5 and 6 the calculating machine is provided with other means for speedily setting the setting mechanism. As shown in the said figures, a shaft 23 provided with a wing piece 24 is provided with loose spur gears 22 which are held at their proper distances by rings 33. The gear wheels are adapted to be brought into or out of engagement with teeth 25′ of the cam disks 25. For this purpose the axis 23 is mounted on a slide which is adapted to be shifted in transverse and rectilinear direction, or, as shown, it is supported on arms 27 which are pivotally mounted at 26 and are adapted to be rocked in the direction of an arrow y shown in Fig. 5 by means of a bail 28. The bail 28 is formed with notches 28′ by means of which it can be fixed within a slot provided at the rear wall 29 of the casing of the machine, as will readily be understood from an inspection of Fig. 5. While setting a value on the setting disks 30 in the direction of the arrow x, the gear wheels 22 are disconnected from the cam disks 25. Before setting the gear wheels 30 to zero, which may be done simultaneously in all the setting disks for example by means of a shaft 32 which is equipped with arms 31 and acts on the teeth 25′ of the cam disks 25, all the wheels 22 are thrown into engagement with the teeth 25′ provided on the cam disks 25. Therefore when the cam disks are being set to zero, the said gear wheels 22 move from their zero positions in the direction of the arrow z and into a position which corresponds to the value which had been set on the cam disks. If it is desired to set the same value again in the same setting mechanism, the wheels 22 are at first thrown into engagement with the teeth 25′ by means of the bail 28. Thereupon the thumb piece 24 is turned in the direction opposite to the arrow z, so that a resetting mechanism of the shaft, which consists of pins 34 and stop members 35 returns all the wheels 22 into zero position and thereby sets the corresponding value on the cam disks 25. A stop member of any desired construction may indicate the zero position of the thumb nut. Also this apparatus is constructed in such a way as to permit transmission of the values to a second setting mechanism 36. For this purpose the wheels 22 are axially shiftable as a whole on the shaft 23, so that they can be brought into engagement with the cam disks 37 of the second setting mechanism 36. After receiving a value from the cam disks 25 the wheels 22 are thrown out of engagement with the teeth 25′ by means of the bail 28, whereupon they are shifted by means of the said bail 28 on the shaft 23 to the left and in position for coöperation with the setting mechanism 36, in which position they are coupled with the cam disks 37 of the said setting mechanism. By resetting the wheels 22 by means of the thumb piece 24 all the wheels of the second setting mechanism are set. The resetting pins 34 of the shaft 23 must take part in the axial displacement of the wheels 22. Therefore they can not be rigidly connected with the

shaft. As appears from Fig. 5 the said pins are secured to a hollow shaft 38 which is connected with the shaft 23 inclosed thereby by a groove and feather key, and which has all the wheels 22 rotatably mounted thereon. The hollow shaft 38 is inclosed between the ends 28″ of the bail 28 so as to take part in the axial displacement of the same.

If it is desired to avoid the long shaft which in the construction shown in Figs. 5 and 6 is provided for the axially shiftable wheels 22, a construction such as is shown in Figs. 7 and 8 may be provided. As shown in these figures, the arms 27′ which hold the shaft 23′ and the transmission wheels 22′ have a rocking support on pivots 26′ mounted on a slide 39. As shown the latter is shiftable in guide ways 41 provided on the base plate 42 of the machine. The means for shifting the slide may be constructed in different ways. To show what may be done a bail 40 is provided which holds all the wheels 22′ together and holds the shaft in its bearings.

In order that the displacements of the transmission wheels be not too large, separate transmission wheels 22 may be provided for each setting mechanism, in which case the sets of wheels can alternately be thrown into engagement with the teeth of the coöperating cam disks. A construction of this kind has been shown in a diagrammatical way in Figs. 9 to 11. In these figures each setting mechanism is represented by only one of its setting disks, cam disks and coöperating transmission wheels. This construction is distinguished from the examples shown in Figs. 3 to 8 in this respect, that for each wheel of one of the groups of transmission wheels a separate shaft is provided which also carries the corresponding transmission wheel of the other group or is operatively connected with the shaft of the said wheel. In the example shown in Fig. 9 the transmission wheel 43 of the setting disk 44 and cam disk 45 of the right hand setting mechanism is secured to a shaft 46 which extends to the second setting mechanism and which has the transmission wheel 43′ of the setting disk 44′, 45′ of the left hand setting mechanism secured thereto. The wheels 43 and 43′ are disposed at such distances apart, that only one of them is at a time in engagement with its cam disks 45 or 45′, as will be understood from an inspection of Fig. 9. The shaft 46 is axially shiftable in its bearings 47 by means of a button 48 or otherwise, so that the wheels 43 and 45 can be thrown out of engagement with each other and the wheels 43′ and 45′ can be connected with each other. In the example shown in Fig. 10 the transmission wheels 49 and 49′ are likewise mounted on the same shaft 50. But they are mounted in such a way, that only one of them is at a time locked to the shaft 50. To effect this the keys 52 and 52′ which are provided for securing the wheels to the shaft 50 are disposed at a smaller distance from each other than the wheels 49 and 49′. Also in this case the shaft 50 can be shifted in axial direction, so that by shifting the same to the left or in the direction of the arrow *u* it is disconnected from the wheel 49, and wheels 49 and 49′ are constantly in engagement with the setting disks 53, 54, and 53′ and 54′, except however when they are thrown out of engagement with the setting disks for receiving the set values, as has been described with reference to Figs. 5 to 8. In the example shown in Fig. 11 the transmission wheel 55 is adapted to be coupled with the shaft 57 of the wheel 55′ which belongs to the second setting mechanism, or with the said wheel itself. As shown a clutch 58, 59 is provided for this purpose.

I claim herein as my invention:

In a calculating machine, the combination with a plurality of setting mechanisms comprising setting disks having a variable number of operative teeth, of mechanism adapted to receive a value set in one of the setting mechanisms, and means to throw the said mechanism into engagement with another setting mechanism for transmitting the received value thereto.

In testimony whereof I have hereunto set my hand in presence of two subscribing witnesses.

FRANZ TRINKS.

Witnesses:

WILHELM LEHRKE,

JULIUS SECKEL.

Copies of this patent may be obtained for five cents each, by addressing the "Commissioner of Patents, Washington, D. C."