April 30, 1929. N. B. CREGIER 1,710,692

RECORD PLAYING MECHANISM

Filed April 10, 1926 3 Sheets-Sheet 1

FIG-1

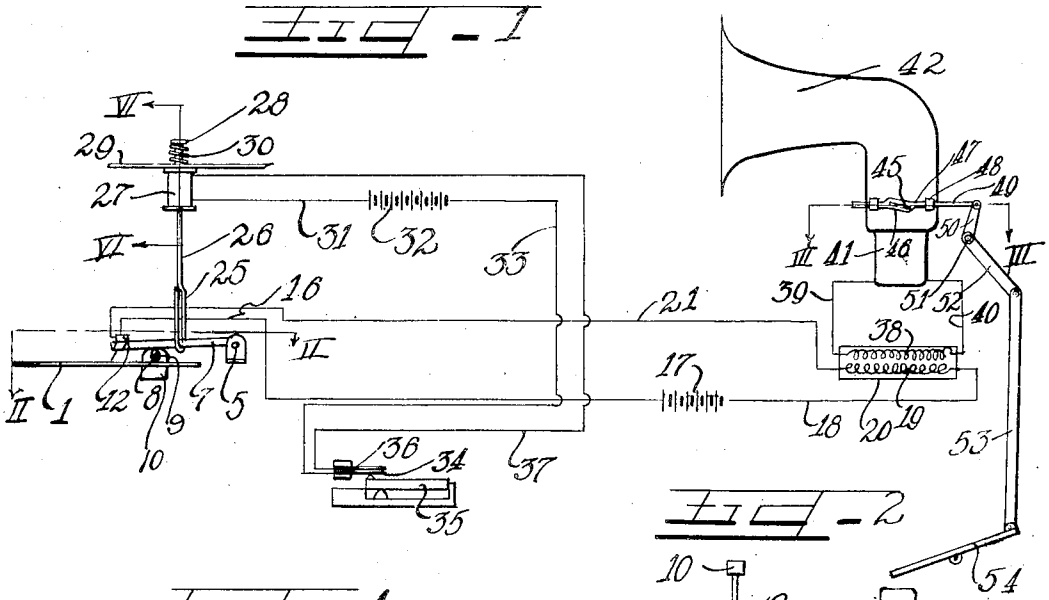

FIG-2

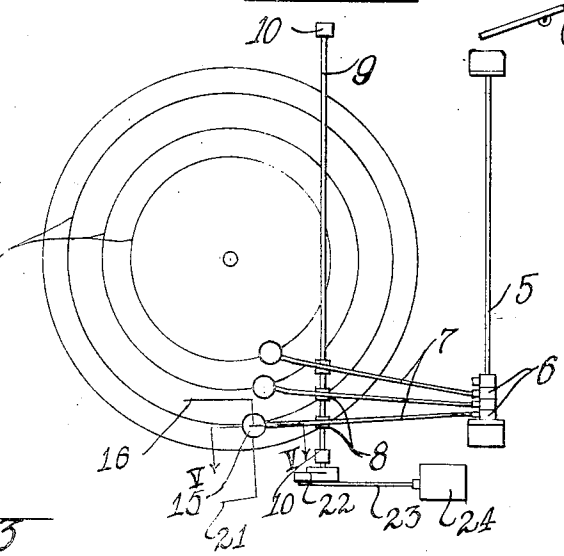

FIG-4

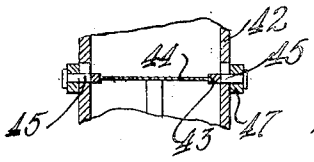

FIG-3

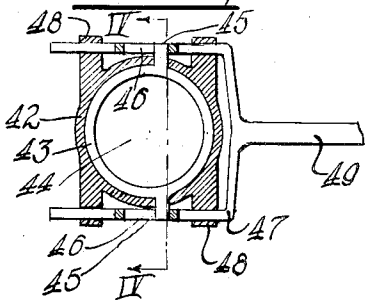

Inventor

Nathaniel Banks Cregier

by Charles W. Helfer Atys

April 30, 1929. N. B. CREGIER 1,710,692

RECORD PLAYING MECHANISM

Filed April 10, 1926 3 Sheets-Sheet 2

Fig. 9

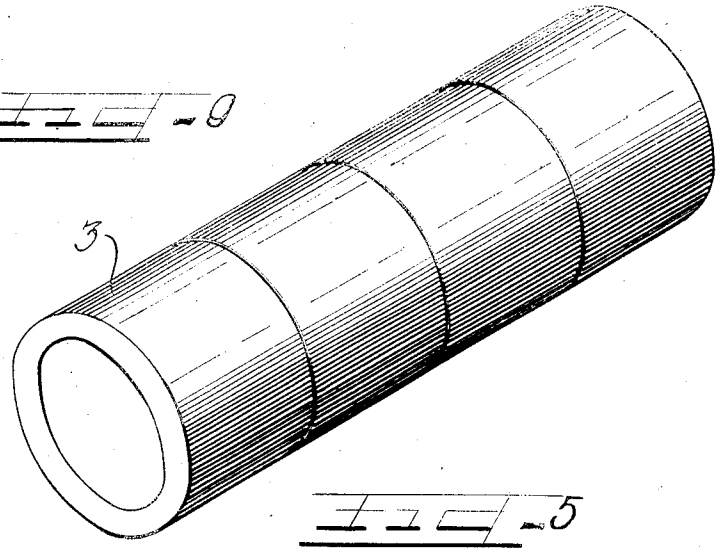

Fig. 5

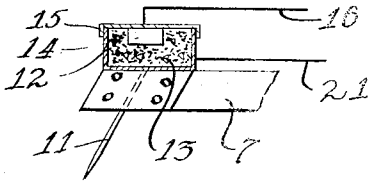

Fig. 10

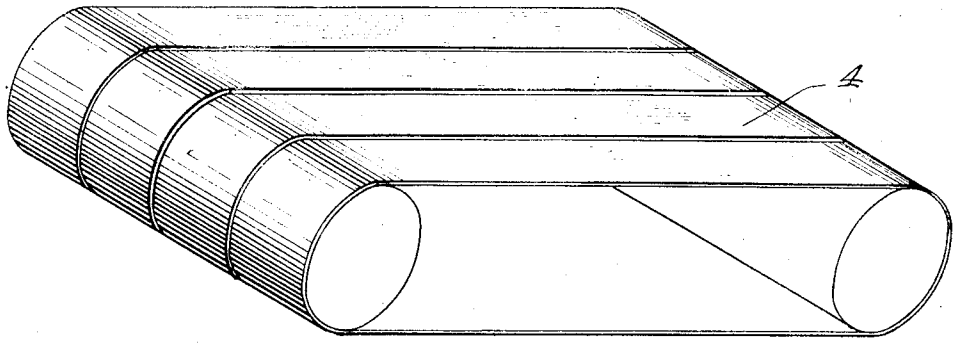

Inventor

Nathaniel Banks Cregier

By Charles G. Wills Attys

April 30, 1929. N. B. CREGIER 1,710,692

RECORD PLAYING MECHANISM

Filed April 10, 1926 3 Sheets-Sheet 3

Fig. 8

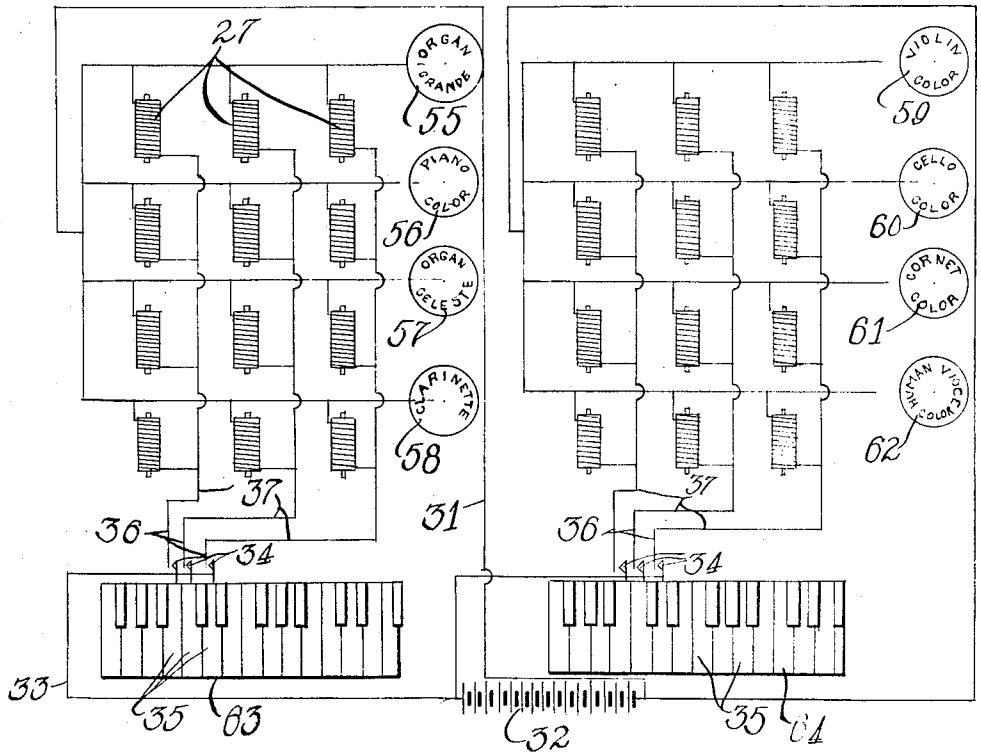

Fig. 7

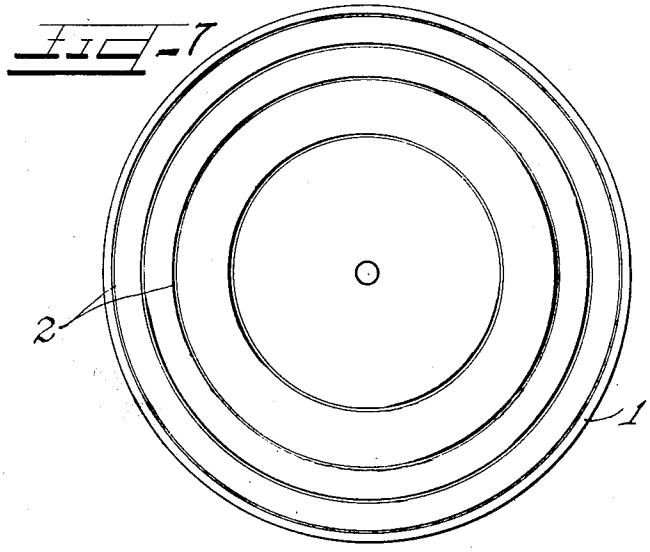

Fig. 6

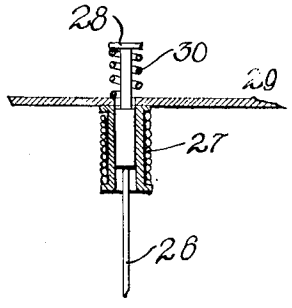

Inventor

Nathaniel Banks Cregier

By Charles H. Hills Attys

Patented Apr. 30, 1929. 1,710,692

UNITED STATES PATENT OFFICE.

NATHANIEL BANKS CREGIER, OF CHICAGO, ILLINOIS.

RECORD-PLAYING MECHANISM.

Application filed April 10, 1926. Serial No. 101,046.

This invention relates primarily to manually played tone records each of said records covering a reproduction of the tones and half tones of different musical instruments, said records being adapted to be selectively played, individually or in groups, by means of a manually played keyboard or piano type manual thereby permitting different musical selections to be played from the same record or records, which records are of an improved type having a plurality of endless tone grooves therein, covering the different tones and half tones of a straight chromatic scale or any selected portion thereof.

It is an object of this invention to provide an improved musical record adapted to be manually played, and permitting any desired selection to be played within the scope of the tones imprinted or formed in said record.

It is also an object of this invention to provide an improved musical record having concentric endless tone grooves therein with each of said grooves adapted to reproduce but a single note or tone of a musical scale.

It is a further object of this invention to provide a musical record having the individual tones of a straight chromatic scale formed therein by means of spaced endless grooves in place of the usual spiral groove, covering a reproduction of a plurality of different tones in a selected order for reproducing a musical selection or the like.

Still another object of the invention is the production of a record and means for manually playing the same, said record being constructed with a plurality of independent tone grooves covering the different tones of a chromatic scale to permit any selected musical selection to be played from said record.

Another object of the invention is to provide an improved method whereby a predetermined tone of a chromatic scale may be sounded by the operation of a selected key of a key board or manual.

It is an important object of this invention to provide an improved record and the method for playing the same, said record being adapted to have imprinted or formed therein the octaves or notes of a chromatic scale of a selected instrument thereby affording an arrangement whereby selected disks covering reproductions of different instruments may be manually connected to permit different selections to be played by manually operating a key board, which electrically, mechanically or pneumatically controls the operation of reproducing needles associated with said records.

Other and further objects of this invention will be apparent from the disclosures in the specification and accompanying drawings.

The invention in a preferred form is illustrated in the drawings and hereinafter more fully described.

On the drawings:

Figure 1 is a diagrammatic view or schematic of a manually operable mechanism embodying the principles of this invention and covering a means for producing an improved method of playing a record.

Figure 2 is an enlarged fragmentary top plan view of a portion of the mechanism taken on line II—II of Figure 1.

Figure 3 is an enlarged fragmentary detail section taken on line III—III of Figure 1.

Figure 4 is a fragmentary section taken on line IV—IV of Figure 3.

Figure 5 is an enlarged detail sectional view taken on line V—V of Figure 2 of one of the reproducing needle mechanisms.

Figure 6 is an enlarged fragmentary detail section taken on line VI—VI of Figure 1.

Figure 7 is a top plan view of a disk record embodying the principles of this invention.

Figure 8 is a composite wiring diagram of the improved system.

Figure 9 is a perspective view of a modified form of record embodying the principles of this invention.

Figure 10 is a perspective view of another modified form of record which may be used in connection with the improved playing mechanisms.

As shown on the drawings:

The reference numeral 1 indicates an improved disk record having recorded on one or both faces thereof, by any suitable means or method, a plurality of spaced concentric endless tone grooves 2, each groove covering a different tone or note of a chromatic scale differing from the ordinary type of record wherein a selected grouping of tones covering a predetermined musical selection are arranged in a spiral groove. The important feature of this invention is the improved type of record 1, which, for example, may be produced by having imprinted or formed thereon the various notes comprising a complete chromatic scale of approximately seven octaves to cover the entire range of the keyboard of a piano or organ. While a record of the notes or tones of a piano or organ has

been described, it will, of course, be understood that similar records of the various notes in chromatic form and octave arrangement of any type of musical instrument such as an organ, celesta, clarinet, violin, cornet or the like, may be produced and used either individually or in selective group arrangements and manually played as hereinafter more fully described. In a record of the type herein used, each circular path or groove in the record represents a musical note of a certain pitch so that by this arrangement approximately fifty-two paths or grooves on a single disk could be used to represent the full range or scope of a piano or organ keyboard.

It is to be remembered that each disk produced is a faithful reproducer of the quality and character of the original selected tones formed in the disk so that if the master die was produced from the tones of a violin, for example, the disk, when played, would respond in the true reproduction of violin tones of the selected character or tone color usually received from a violin. With a record of this type, when properly played, a violin accompaniment as well as a violin solo or theme could be played from the same record. In this connection it will of course be realized that the harmonizing of tone colors for both solo and accompaniments can be pursued throughout the entire range of musical instruments.

The improved record may also be formed to reproduce the different tones of the range of a human voice in scale form. By this method it will be understood that the voice of any famous singer could be recorded on a record by means of the individual endless tone grooves so that the record may be played so that the recorded voice of the selected singer or artist could be used to sing any desired selection or melody. Another possibility is that the recorded voice range of a singer could be used, by proper playing of a record, to reproduce simultaneously a plurality of voices of the same singer singing the same or different variations or parts of a selection.

Figure 9 illustrates a modified form of record. This modification covers a cylindrical record 3, adapted to be formed with a plurality of individual endless spaced tone grooves covering the different notes of a complete chromatic scale or any portion thereof, or the reproduction of the different notes covering the range of a singer's voice.

Figure 10 illustrates another modified form of record embracing an endless belt or ribbon record 4, adapted to have imprinted or formed therein a selected series of spaced individual endless tone grooves covering the different notes of a complete chromatic scale or any selected portion thereof or a reproduction of the notes covering the range of a singer's voice.

Figures 1 to 8 inclusive, illustrate a preferred embodiment of a mechanism adapted to be used for the purpose of manually playing one, or a selected combination, of the improved disk type musical records.

Referring now to Figures 1 to 7 inclusive, a mechanism is disclosed whereby an improved record 1, may be manually played. The record 1 may be mounted on any suitable type of rotatable turntable of the phonograph style, and any mechanism may be provided for the purpose of starting and stopping the rotation of the record and its turntable. Mounted on a supporting shaft 5, are a plurality of bearing blocks 6, corresponding in number to the number of independent grooves 2 in the record 1, to be played. The number of bearing blocks 6 may also correspond to the number of notes of a full chromatic scale, thereby affording an arrangement whereby the notes of any selected octave, or any group of octaves may be selectively played. Connected to each of the bearing blocks 6 is a tone arm 7, which is normally adapted to be held in an elevated position by means of a cam 8, mounted on a cam shaft 9, engaged in suitable supports 10. Mounted on the outer, or free end, of each tone arm 7 is a reproducing needle 11 which communicates with a sound box 12 of any desired construction. The sound box 12, illustrated in detail in Figure 5, contains a quantity of carbon particles 13, for coaction with a hard carbon contact block 14, mounted on the inner face of a cover 15 for the sound box. Connected to the carbon contact block 14 is one end of a conductor wire 16, the other end of which is connected to one terminal of a secondary battery 17. Connected to the other terminal of the local battery 17 is one end of a wire 18, the other end of which is connected to one terminal of the primary winding 19 of an induction coil 20. Connected to the other terminal of the primary winding 19 is one end of a wire 21, the second end of which is connected to the second terminal of the respective sound box 12. As illustrated in Figure 2 one end of the cam shaft has mounted thereon a crank arm 22 to which a connecting rod 23 is connected. The connecting rod is adapted to be operated by means of a head or button 24 connected to one end of the rod and adapted to be mounted in an accessible position on the front panel of the instrument casing. When the control button 24 is operated the cam shaft 9 is partially rotated so that the respective cams 8 are moved into a position to release the respective tone arms 7 carrying the reproducing needles 11.

For the purpose of holding a tone arm 7 in an elevated position when its respective cam 8 is moved into a released position, the tone arm has engaged therewith a slotted head or hook 25 formed on the lower end

of a solenoid core 26. The solenoid core projects longitudinally through a solenoid coil 27, and is provided with a head 28. The solenoid is mounted on the underside of a supporting table or plate 29. Engaged around the upper end of the solenoid core 26, between the head 28 and the supporting table 29, is a return control spring 30. Connected to one terminal of the solenoid coil 27 is one end of a wire 31, the other end of which is connected to one terminal of a primary battery 32. Connected to the other terminal of the primary battery 32 is one end of a wire 33, the other end of which is connected to one terminal 34 of a make and break switch, one of which is associated with each of the keys 35 of a keyboard or manual which is mounted in position in an instrument casing similar to the arrangement of the mounting of the keys of a piano or organ. Connected to the second terminal 36 of the make and break switch is one end of a wire 37, the other end of which is connected to the second terminal of the solenoid coil 27. The solenoid control spring 30 acts to normally hold the solenoid core 26 and the hook 25 in an elevated position, thereby holding the tone arm 7 in a raised position to hold the reproducing needle 11 out of contact with the record 1, even when the cam 8 has been moved to release the tone arm.

When a selected key 35 is operated the corresponding switch arm 34 is moved into contact engagement with the switch arm 36 thereby closing the circuit through the primary battery 32 to energize the solenoid coil 27. When this operation takes place the solenoid core 26 slides downwardly against the action of the return spring 30 thereby releasing the tone arm 7 and permitting the reproducing needle 11 to engage in the respective tone groove 2 of the record 1. With the record rotating, as hereinbefore mentioned, the recorded note or tone of the selected record groove is reproduced by the reproducing box 12, and the tone is transmitted by means of the secondary battery 17 and the primary winding 19 of the induction coil 20. The tone waves transmitted to the primary winding 19 of the induction coil are transferred to the secondary winding 38 of the induction coil. The terminals of the secondary winding 38 are connected by means of wires 39 and 40 to the terminals of a loud speaker coil mounted within the base 41 of a loud speaker horn 42. Mounted within the loud speaker horn 42 is a ring member 43 containing a diaphragm 44. Formed on opposite sides of the ring member 43 are pins or fingers 45 which project through openings in the horn 42, and engage in inclined cam slots 46 formed in the arms of a yoke member 47. The yoke member 47 is slidably engaged in projections 48 mounted or formed on the exterior of the lower portion of the horn 42. The yoke member 47 is provided with a handle 49 to the outer end of which is pivotally connected the short arm 50 of a bell crank member pivoted at 51 to any suitable stationary support. The long arm 52 of the bell crank is pivotally connected to the upper end of a connecting rod 53 the lower end of which is pivotally connected to a foot pedal 54 mounted in a convenient place, to be operated by the foot of a player playing the instrument. The diaphragm mechanism 44 and the mechanism for operating the same is provided for the purpose of governing the volume or tone qualities of the notes which are being reproduced.

Figures 1 to 7 inclusive, have been described to cover an improved reproducing record having a series of concentric independent endless tone grooves therein, and also cover a mechanism whereby the improved record may be manually played from a keyboard forming a part of the instrument.

It will, of course, be understood that the various notes or tones of any selected instrument, as well as the notes comprising the ranges of different human voices, may be separately recorded upon different records so that any one of the records may be used in the musical instrument and played manually from the keyboard. The instrument permits any desired selection to be reproduced and played from the record used in the machine. It will be readily seen that if the record is one on which the full chromatic scale of an instrument is recorded that said record will not only permit the playing of one selection, but any selection or any harmonious relations that may be played on said instrument. It will also be seen that not only solos and the like can be played from the record, but duets and the like may also be reproduced from the self same record. As shown in Figure 2 a needle reproducing mechanism is provided for each of the individual tone grooves of the record.

In an instrument arranged for the playing of but a single record at one time the cam shaft 9, and the corresponding cams 8 need not be provided. In such a case the control button mechanism 22, 23 and 24 for operating the cam shaft 9 may also be omitted. If preferred, however, the cam mechanisms 8 may be used, even in a one record machine, to afford an arrangement whereby the reproducing needles of the various tone arms 7 may be held in a raised position even though the keys of the instrument are played to actuate the various solenoid mechanisms. Operation of the solenoid mechanisms will not cause lowering of the reproducing needles when the tone arms are held in a raised position by the cams 8.

The mechanism for manually operating or playing a record 1 may also be adapted for use in playing a cylindrical type record 3 of

the type illustrated in Figure 9, or the continuous belt record 4 as shown in Figure 10.

There is a further possibility apparent wherein an instrument may be provided that will not only permit manual playing of one of the improved records but may permit the selective playing of a plurality of records, each of which has recorded thereon the respective tones or notes of a different musical instrument. This arrangement is made possible, as illustrated in the circuit diagram covered by Figure 8. In this figure the reference numeral 55 indicates a record covering the various notes or tones of an organ (grande). A piano record is indicated by the reference numeral 56. The reference numeral 57 indicates an organ (celesta) record, while the reference numeral 58 covers a clarinet record. The reference numeral 59 indicates a violin record, while 60 is used to designate a cello record. A cornet record is indicated by the reference numeral 61, while the reference numeral 62 is used to indicate a record covering the notes or tones embracing the singing range of a selected individual. It is thus seen that the tone ranges of different great artists may be reproduced on records thereby affording a means to permit any desired vocal selection to be sung with the voice recorded on the record, depending upon the selection played on the keys of the instrument by the person operating the same.

The reference numeral 63 indicates, as a whole, a keyboard or piano type manual with each of the keys 35 connected with a switch blade or arm 34, as hereinbefore described in connection with Figure 1. The various switch blades 34 are connected by individual wires 33 to one terminal of the primary battery 32. With this arrangement it will be seen that an instrument may be made adapted to permit either one or a plurality of instrument records to be used, with the record control mechanisms connected to the keyboard or manual 63. If preferred, an instrument, such as an organ grande may be constructed wherein two or more keyboards or manuals are provided. In such an instrument the lower keyboard or manual is represented by the reference numeral 63, as shown in Figure 8, while the upper keyboard or manual is represented by the reference numeral 64. In such an arrangement a plurality of the different record playing mechanisms may be connected with one manual, while another group of record playing instruments may be connected with the second manual. With the arrangement shown in Figure 8 any desired number of manuals may be used. By playing either one, or a plurality of manuals, and by connecting up a selected group of record playing instruments, band or orchestra effects may be reproduced by a manual playing of the selected records in the machine.

With the improved device herein described it is possible by this method to reproduce or sound any predetermined tone of either a selected instrument or of a human voice. This selected reproduction of predetermined tones may be obtained by the use of either the improved disk form of record, the cylindrical type of record, the belt type of record, or any other preferred form of record which may be developed or is at present in use.

While an electrical arrangement has been shown for the manual playing of the improved records, it will of course, be understood that said records may be played by means of mechanically or pneumatically controlled needle actuating reproducing mechanisms.

The improved arrangement also permits the reproduction of any desired selection of the tones of a selected human voice accompanied by the necessary musical accompaniment, of say, for example, a piano with a violin obligato. The various combinations possible will be evident from a reading of the specification and a study of the drawings forming a part thereof.

It will of course be understood that while reference has been made to the playing of the keyboard manual by a person, that a player roll, or the like, may be used to cause automatic playing of the keyboard manual to cause the playing of different selections or themes from improved records of the type herein described.

I am aware that many changes may be made and numerous details of construction may be varied through a wide range without departing from the principles of this invention and I therefore do not purpose limiting the patent granted hereon otherwise than necessitated by the prior art.

I claim as my invention:

1. A mechanism for playing an endless tone groove record comprising a plurality of reproducing mechanisms one for each of the grooves of said record, cam mechanisms associated with said reproducing mechanisms for normally holding the same out of engagement with said record, control devices for operating the said cam mechanisms to cause release of said reproducing mechanisms, solenoids connected with said reproducing mechanisms to normally hold the same in a release position, a plurality of switch mechanisms connected with said solenoids to permit a selective independent operation of each of said solenoids, a loud speaker mechanism connected with said reproducing mechanisms, a manually operable device connected with said loud speaker mechanism to permit variations in tone qualities, and a key manual associated with said switch mechanisms and adapted to be manually played to cause a selective operation of said switch mechanisms and a corresponding selective operation of said solenoids to selectively release

the reproducing mechanisms into playing engagement with the respective grooves of said record to permit any selected musical theme played on said keyboard to be played from said record and reproduced by said loud speaker mechanism.

2. A record playing instrument comprising a pivotally supported tone arm, a reproducing mechanism mounted thereon for coaction with a record, a cam for normally holding the tone arm in an elevated position, means for operating said cam to release the tone arm, a solenoid, a core therefor, means formed on one end of said core for engaging the tone arm to hold the same in an elevated position when said cam is moved into a released position, a control spring on said solenoid core for normally holding the solenoid core and said tone arm in a raised position for holding the reproducing mechanism out of contact with said record, a switch mechanism connected with said solenoid, and a piano key mechanism associated with said switch mechanism adapted to be operated to energize said solenoid to cause the solenoid core to be lowered against the action of said control spring permitting the reproducing mechanism to be lowered into playing engagement with the record when said cam is in released position.

3. A record reproducing machine comprising a reproducing mechanism, a cam mechanism coacting therewith normally holding the same in a released position, means for operating said cam mechanism to permit the reproducing mechanism to be lowered into playing engagement with a record, a solenoid mechanism connected with said tone arm and normally holding the same in a raised position even when said cam mechanism is released, and a key operated mechanism connected with said solenoid mechanism adapted to be operated to release the tone arm permitting the reproducing mechanism to engage the record to play the same.

4. A record reproducing machine comprising a reproducing mechanism for playing a record, a cam mechanism to hold the reproducing mechanism out of engagement with said record, means for releasing the cam mechanism, a spring controlled solenoid mechanism also provided for holding the reproducing mechanism out of engagement with said record, and means for operating the spring controlled solenoid mechanism to permit the reproducing mechanism to be lowered into playing engagement with said record.

5. A record playing instrument comprising a reproducing mechanism for playing a record, a cam mechanism and a solenoid mechanism associated with said reproducing mechanism to hold the same out of playing engagement with said record, and means for independently operating said cam mechanism and said solenoid mechanism in a predetermined order to permit the reproducing mechanism to be lowered into playing engagement with said record.

In testimony whereof I have hereunto subscribed my name.

NATHANIEL BANKS CREGIER.