(12) INTERNATIONAL APPLICATION PUBLISHED UNDER THE PATENT COOPERATION TREATY (PCT)

(19) World Intellectual Property Organization
International Bureau

(43) International Publication Date
8 July 2010 (08.07.2010)

PCT

(10) International Publication Number
WO 2010/077597 A2

(51) International Patent Classification:
H01L 21/50 (2006.01)

(21) International Application Number:
PCT/US2009/066961

(22) International Filing Date:
7 December 2009 (07.12.2009)

(25) Filing Language: English

(26) Publication Language: English

(30) Priority Data:
61/120,797 8 December 2008 (08.12.2008) US

(71) Applicant *(for all designated States except US)*: **FUJIFILM DIMATIX, INC.** [US/US]; 109 Etna Road, Lebanon, New Hampshire 03766 (US).

(72) Inventors; and

(75) Inventors/Applicants *(for US only)*: **DEMING, Steve** [US/US]; 109 Etna Road, New Hampshire, Lebanon, New Hampshire 03766 (US). **BIRKMEYER, Jeffrey** [US/US]; 1657 Andalusia Way, San Jose, California 95125 (US). **SCHNEIDER, David W.** [US/US]; 4383 Monet Place, San Jose, California 95136 (US). **BIBL, Andreas** [US/US]; 588 Harrington Avenue, Los Altos, California 94024 (US).

(74) Agents: **GOREN, David J.** et al.; Fish & Richardson P.C., P.O. Box 1022, Minneapolis, Minnesota 55440-1022 (US).

(81) Designated States *(unless otherwise indicated, for every kind of national protection available)*: AE, AG, AL, AM, AO, AT, AU, AZ, BA, BB, BG, BH, BR, BW, BY, BZ, CA, CH, CL, CN, CO, CR, CU, CZ, DE, DK, DM, DO, DZ, EC, EE, EG, ES, FI, GB, GD, GE, GH, GM, GT, HN, HR, HU, ID, IL, IN, IS, JP, KE, KG, KM, KN, KP, KR, KZ, LA, LC, LK, LR, LS, LT, LU, LY, MA, MD, ME, MG, MK, MN, MW, MX, MY, MZ, NA, NG, NI, NO, NZ, OM, PE, PG, PH, PL, PT, RO, RS, RU, SC, SD, SE, SG, SK, SL, SM, ST, SV, SY, TJ, TM, TN, TR, TT, TZ, UA, UG, US, UZ, VC, VN, ZA, ZM, ZW.

(84) Designated States *(unless otherwise indicated, for every kind of regional protection available)*: ARIPO (BW, GH, GM, KE, LS, MW, MZ, NA, SD, SL, SZ, TZ, UG, ZM, ZW), Eurasian (AM, AZ, BY, KG, KZ, MD, RU, TJ, TM), European (AT, BE, BG, CH, CY, CZ, DE, DK, EE, ES, FI, FR, GB, GR, HR, HU, IE, IS, IT, LT, LU, LV, MC, MK, MT, NL, NO, PL, PT, RO, SE, SI, SK, SM,

[Continued on next page]

(54) Title: WAFER TAPING

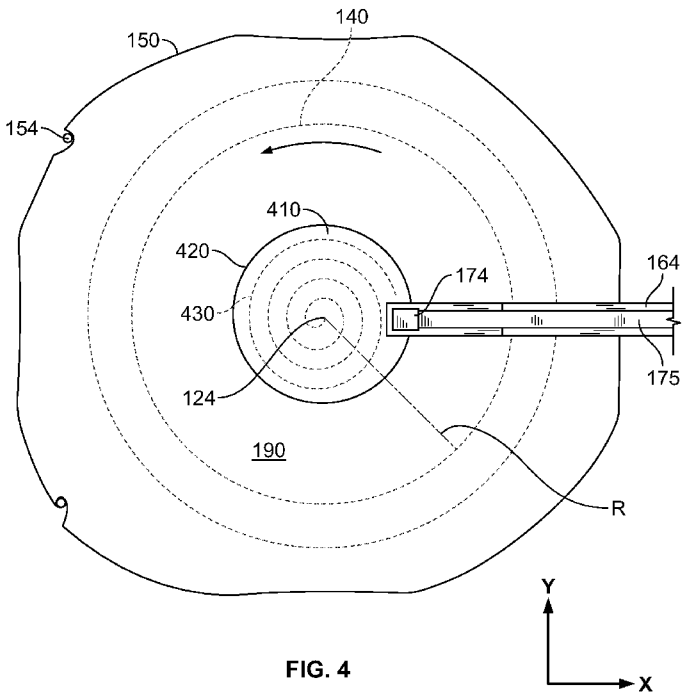

FIG. 4

(57) Abstract: A method for applying tape to a substrate can include positioning a tape proximate and substantially parallel to a surface of a substrate. A pressure source can be configured to apply pressure to a region of tape smaller than the surface in both an x direction and y direction, the x and y directions being parallel to the surface and perpendicular to one another. For example, the pressure source can be a stream of fluid such as air. Pressure can be applied to a side of the tape opposite the surface in a region smaller than the surface to cause the tape to adhere to the substrate opposite the region. The region can be moved relative to the substrate in an outward radial direction while applying the pressure. The region can be moved such that no unadhered region of tape is enclosed by any adhered region of tape.

WO 2010/077597 A2

TR), OAPI (BF, BJ, CF, CG, CI, CM, GA, GN, GQ, GW, ML, MR, NE, SN, TD, TG).

Published:

— *without international search report and to be republished upon receipt of that report (Rule 48.2(g))*

WAFER TAPING

BACKGROUND

This description relates to apparatus, systems, and methods for applying tape to a substrate, such as a semiconductor wafer substrate.

Tape can be applied to a surface to protect a surface, and one or both sides of the tape can include an adhesive. During manufacturing of a semiconductor wafer substrate, for example, a surface of the substrate can be protected from damage by a tape while operations are performed on an opposite surface. Where the opposite surface includes fragile features, such as micro-electrical-mechanical system (MEMS) structures, it can be desirable to support the substrate only at or near an outer edge during taping. Rolling a tape onto a surface of a substrate typically requires supporting a large portion of an opposite surface in order to avoid cracking or breaking of the substrate caused by forces applied during taping.

SUMMARY

In one aspect, the systems, apparatus, and methods described herein include a method for applying tape to a substrate, which can include positioning a tape proximate and substantially parallel to a surface of a substrate. Pressure can be applied to a side of the tape that is opposite the surface in a region smaller than the surface so as to cause the tape to adhere to the substrate opposite the region. The region can be moved relative to the substrate in an outward radial direction while applying the pressure.

In another aspect, an apparatus for applying tape to a substrate can include a support configured to hold a substrate and to hold a tape proximate a surface of the substrate and stationary relative to the substrate. A pressure source can be configured to apply pressure to a region of the tape smaller than the surface in both an x direction and a y direction, the x and y directions being parallel to the surface and perpendicular to one another. A motor can be coupled to one or more of the pressure source and the support and configured to move the region relative to the substrate.

In another aspect, a system for applying tape to a substrate can include a substrate support configured to hold a substrate. A tape support can be configured to hold a tape proximate and substantially parallel to a surface of the substrate. The

system can include a means for applying pressure to a side of the tape opposite the surface in a region smaller than the substrate. The system can also include a means for moving the region.

Implementations can include one or more of the following features. The region can be moved so that no unadhered region of tape is enclosed by any adhered region of tape. The tape can be adhered to the entire surface of the substrate. Moving the region can be along an outward spiral, and the region can start moving near a center of the substrate. Moving the region can include rotating the substrate and the tape. The rotating can be at a rate of between about 20 revolutions per minute (rpm) and about 90 rpm and can be adjustable. Moving the region can also include translating the region relative to the substrate. Applying pressure can include directing a fluid against a side of the tape opposite the surface, and the fluid can be air. Applying pressure can also include contacting a spherical bearing against the tape. The pressure applied can be between about 5.0 pounds per square inch (psi) and about 40 psi. An area of the region can be between about 0.004% and about 10% of a surface area of the surface of the substrate. The tape can be positioned between about 0.5 millimeters and about 3.0 millimeters from the surface of the substrate.

In some implementations, the support can be configured to rotate the substrate about a rotational axis. The pressure source can be configured to translate substantially along a direction that is perpendicular to the rotational axis. The pressure source can include a nozzle configured to direct a flow of fluid against a side of the tape opposite the surface. An outlet of the nozzle can be positioned between about 0.5 millimeters and about 3.0 millimeters from the side of the tape opposite the surface. A filter can be configured to filter the flow of fluid. The sheet of tape can be positioned between about 0.5 millimeters and about 3.0 millimeters from the substrate.

DESCRIPTION OF DRAWINGS

FIG. 1A is an isometric-view schematic representation of a taping apparatus.

FIG. 1B is an elevation-view schematic representation of the taping apparatus of FIG. 1A.

FIG. 1C is a schematic representation of a portion of the taping apparatus of FIG. 1A.

FIG. 1D is a plan-view schematic representation of a tape ring.

FIG. 2 is a flow diagram of a method of taping a substrate.

FIG. 3 is a schematic diagram of a fluid delivery system.

FIG. 4 is a plan-view schematic representation of a taping apparatus during a portion of a process of taping a substrate.

FIGS. 5A and 5B are schematic representations of portions of an alternative taping apparatus.

FIG. 6 is a flow diagram of a method of taping a substrate.

Like reference symbols in the various drawings indicate like elements.

DETAILED DESCRIPTION

A taping apparatus can include a moveable pressure source. The taping apparatus can further include a tape ring configured to position a tape proximate to a surface of a substrate. The pressure source can include a mechanism for exerting pressure on a region of the tape that is smaller than the substrate. For example, the pressure source can include a nozzle configured to direct a fluid stream toward a tape, a spherical bearing, or some other suitable mechanism. The taping apparatus can include a rotor configured to rotate the substrate and a pressure arm configured to translate the pressure source radially above the tape. The pressure source can be moved in an outwardly expanding spiral to adhere the tape to all or a portion of the substrate.

Referring to FIG. 1A, a taping apparatus 100 can include a support frame 110. A support plate 114 can be attached to the support frame 110 and be configured to support a rotor base 118. The rotor base 118 can rotatably support a rotor 120 (see FIG. 1B), which can be configured to rotate about a rotational axis 124. Examples of a rotor base 118 and rotor 120 can include bearings or "turntables" (not shown) manufactured by IKO / Nippon Thompson Co., Ltd. of Japan. The rotor 120 can be configured to support a substrate holder 130 and tape ring supports 134.

The substrate holder 130 can support a substrate 140. The substrate 140 can be, for example, a semiconductor wafer, such as a silicon wafer. The substrate can have a top surface 144 and a bottom surface 146 (see FIG. 1C). The substrate holder 130 can be magnetically mounted to the rotor 120 to facilitate rapid replacement of the substrate holder 130 with another substrate holder (not shown). This rapid-replacement feature can be desired, for example, for taping substrates 140 of differing sizes. In some implementations, the substrate holder 130 can be centered on the

rotational axis 124. The tape ring supports 134 can removably support a tape ring 150 on a side of the substrate holder 130 opposite the rotor 120. The tape ring supports 134 can be adjustable, as discussed further below.

Referring to FIG. 1D, the tape ring 150 can have an aperture 152, e.g., a circular hole with an inner diameter A, that is larger than the substrate 140 to be taped. In some implementations, apertures 136 are formed in the substrate holder 130 (see FIG. 1B), and when the substrate holder 130 is positioned on the rotor 120, the tape ring supports 134 extend through the apertures 136 beyond the substrate holder 130, thus permitting the tape ring 150 to be held a fixed distance above the substrate holder 130.

The tape ring 150 can be positioned relative to the substrate holder 130 by locating pins 154 (see FIGS. 1A and 1B) that project from the substrate holder 130. Some or all of the locating pins 154 can fit into alignment notches 156 (see FIG. 1D) on the tape ring 150 so that the aperture 152 is positioned over the substrate 140. In some implementations, some or all of the locating pins 154 can fit against a perimeter P of the tape ring 150. The tape ring 150 can be configured to hold a portion of a tape 190 (FIG. 1C) extending across the aperture 152 proximate the substrate 140, as discussed further below. The tape ring 150 can be configured to hold the tape 190 stationary relative to the substrate 140.

Referring to FIGS. 1A and 1B, the support plate 114 can support a pressure arm subassembly 160, which can include a pressure arm 164 to position a pressure applicator 168 on a side of the tape 190 opposite the substrate 140. In some implementations, the pressure applicator 168 directs a fluid against the tape. In such implementations, the pressure arm 164 can include a nozzle 170. The nozzle 170 can be formed in the pressure arm 164, such as by machining. Alternatively, the nozzle 170 can be formed as a separate structure configured to be fitted to or within the pressure arm 164. For example, the nozzle 170 can be a machined fitting that includes threads configured to mate with threads formed in the pressure arm 164. Alternatively, the nozzle 170 can be a separate structure configured to engage with the pressure arm 164 by press fit, friction fit, sliding fit, set screw, some combination of these fitments, or some other suitable fitment. The nozzle 170 can include an outlet 172 having a diameter D (FIG. 1C). In some alternative implementations, the outlet

172 can have a shape other than circular, such as oval, square, or some other suitable shape.

The pressure arm 164 can be further configured for a fluid fitting 174 to engage therewith. The fluid fitting 174 can be removably attached to the pressure arm 164, such as by threaded fitment, and can be configured to deliver fluid, such as pressurized fluid, to the nozzle 170. The fluid fitting 174 can include a barb 175 configured to attach a hose 176 (FIG. 1C) to the fitting 174.

The pressure arm 164 can be supported by a pressure arm support 182. The pressure arm support can be configured to be translatable along a pressure arm rail 184 by a pressure arm actuator 186. Examples of the pressure arm actuator 186 include linear actuators, such as those manufactured by IKO / Nippon Thompson Co., Ltd. of Japan. The pressure arm actuator 186 can include a motor, such as an electric motor, such as an electronically-controlled electric motor. The pressure arm rail 184 can be supported by the support plate 114.

Referring to FIG. 1C, fluid flow can flow (see arrows) through the hose 176, fitting 174, pressure arm 164, and nozzle 170. The pressure arm 164 is shown positioned at a nozzle-to-tape distance N above the tape 190, which is in turn positioned at a tape-to-substrate distance T above the substrate 140.

The nozzle-to-tape distance N can be controlled by adjusting the pressure arm support 182. For example, the pressure arm 164 can be mounted on studs (not shown) protruding from the pressure arm rail 184, and the position of the pressure arm 164 along the studs can be adjusted. As another example, shims or spacers (not shown) can be inserted or removed between the pressure arm 164 and the pressure arm support 182. As a further example, a motor (not shown) can vertically extend or retract the arm support 182 to adjust the nozzle-to-tape distance N. As a further example, the nozzle-to-tape distance N can be monitored, such as by a sensor (not shown), and the nozzle-to-tape distance N can be automatically controlled, such as by software and motors. The nozzle-to-tape distance N can be between about 0.5 millimeters (mm) and about 3.0 mm.

The tape-to-substrate distance T can be controlled by adjusting the tape ring supports 134, which can include microadjusters (not shown). In some implementations, the tape-to-substrate distance T can be monitored, such as by a sensor (not shown), and the tape ring supports 134 can be automatically controlled,

such as by software and motors. In some implementations, the tape-to-substrate distance T can be between about 0.5 mm and about 3.0 mm. The tape 190 can be positioned substantially parallel to the top surface 144 of the substrate.

A fluid stream 178 is shown exiting the outlet 172 and contacting the tape 190. The fluid stream 178 can exert a pressure on the tape 190 within a region R sufficient to cause the tape 190 to contact the substrate 140, as discussed further below. The region R can be relatively smaller than the substrate 140 as a whole and can be, for example, between about .004% and about 10% of a surface area of the substrate 140. As a further example, for a substrate having a diameter of 150 mm, the region can have a diameter of between about 1.0 mm and about 5.0 mm. In some implementations, the nozzle 170 can be configured to direct the fluid stream 178 substantially perpendicular to the top surface 144 of the substrate 140, as shown in FIG. 1C. In other implementations, the nozzle 170 can be configured to direct the fluid stream 178 at an angle relative to the substrate 140, for example, at a 30° or 45° angle. This angle can be, for example, a leading or trailing angle. That is, the fluid stream 178 can be directed in a direction perpendicular to a radius of the substrate 140 or toward or opposite a direction of rotation of the substrate 140.

FIG. 2 is a flow diagram of a method 200 of taping a substrate 140. The substrate 140 can be placed on the rotor 120, such as on the substrate holder 130 (step 210). The tape 190 supported by the tape ring 150 can be positioned proximate the substrate 140 (step 220). The rotor 120 can be rotated about the rotational axis 124 (step 230). The rotating can be done, for example, at a rotation speed between about 20 revolutions per minute (rpm) and about 90 rpm. The nozzle 170 can be positioned above the tape 190, such as along the rotational axis 124 (step 240). This positioning of the nozzle 170 can be performed before or after a start of rotating of the rotor 120. Fluid can be flowed through the nozzle 170 and can be directed at the tape 190 (step 250). The nozzle 170 can be translated radially outward from the rotational axis 124, such as perpendicular to the rotational axis 124 (step 260). A speed of translation can be between about 25 millimeters per minute (mm/min) and about 45 mm/min, such as about 35 mm/min. Rotation speed can be varied during translation, for example, to maintain substantially constant tangential velocity of the rotor 120 during translation along a radius, such as radius R (FIG. 4). After taping, the substrate 140 can be separated from the tape ring 150 by cutting the tape 190 around the substrate 140.

Alternatively, the substrate 140 can remain attached the tape ring 150 by the tape 190 to facilitate handling of the substrate 140 during further processes, such as, for example, semiconductor fabrication processes or MEMS fabrication processes.

Referring to FIG. 3, a fluid system 300 can include a compressed fluid tank 310. In some implementations, the compressed fluid tank 310 can be pressurized with fluid at some remote location (not shown), such as a fluid supplier, for example, a supplier of compressed gases, and can then be fluidically connected to the fluid system 300. In such implementations, the compressed fluid tank 310 can be gradually depleted during use of the fluid system 300, and the compressed fluid tank 310 can be replaced or recharged as necessary. In some other implementations, the compressed fluid tank 310 can be replenished and pressurized continuously or intermittently by a pump or a compressor (not shown). Where the fluid is a liquid, the compressed fluid tank 310 can include a pressurizing mechanism (not shown), such as a pressurized or spring-loaded diaphragm or piston, to apply pressure to fluid in the compressed fluid tank 310. Fluid in the compressed fluid tank 310 can be pressurized to, for example, between about 40 pounds per square inch (psi) and about 100 psi. In some implementations, fluid in the compressed fluid tank 310 can be pressurized to about 100 psi, and an intermediate regulator (not shown) can regulate pressure to about 40 psi for use by the fluid system 300.

The compressed fluid tank 310 can be fluidically connected to an optional filter assembly 320. The filter assembly 320 can include a large particle filter 330 that includes a fluid screen 334 configured to trap or exclude relatively large particulates from a fluid. The fluid screen 334 can be configured to screen relatively large particulates from the fluid. For example, the fluid screen 334 can have openings between about 0.5 microns and about 10 microns. In some implementations, the fluid in the compressed fluid tank 310 can be a clean fluid, e.g., a fluid free of large particles, such as a clean gas, such as clean dry air (CDA) or clean nitrogen, and the fluid screen 334 can be omitted. The filter assembly 320 can also include an optional fluid filter 340. The fluid filter 340 can be configured to remove relatively small particulates from the fluid. For example, the fluid filter 340 can remove particles larger than about 0.003 microns, such as particles larger than about 0.05 microns. Suitable filters are available from Pall Corporation of East Hills, New York.

The fluid tank 310 can be fluidically connected to a regulator 350, such as through the optional filter assembly 320. The regulator 350 can be configured to regulate, for example, a pressure or flow rate of fluid exiting the regulator 350. The regulator 350 can regulate flow rate, pressure, or both. The regulator 350 can be controlled by a regulator control 354, which can be, for example, in electrical or mechanical communication with the regulator 350. In some implementations, the regulator control 354 can be software-controlled. The regulator 350 can be fluidically connected to the fluid fitting 174, such as by the hose 176. The fluid fitting 174 can be fluidically connected to the nozzle 170, as described above. The compressed fluid tank 310, filter assembly 320, and regulator 350 can be fluidically connected to one another by fluid system tubing 360. The hose 176 and the fluid system tubing 360 can be flexible or non-flexible and can include rubber tubing, copper tubing, or some other suitable tubing or combination of tubing.

Arrows in FIG. 3 indicate a direction of fluid flow. Fluid can flow from the compressed fluid tank 310 through the regulator 350. Fluid passing from the compressed fluid tank 310 to the fluid regulator 350 can optionally be screened, filtered, or both by the optional filter assembly 320. Fluid flowing out of the regulator 350 to the hose 176 can have a pressure of, for example, between about 5 psi and about 40 psi, such as about 15 psi. Fluid can flow through the hose 176 to the fluid fitting 174. Fluid can then flow through the nozzle 170 and out the outlet 172.

In some alternative implementations, a fluid pump (not shown) can be configured to pressurize the fluid and to pump the fluid to the fluid regulator 350. Where the fluid is air, the fluid pump can be an air compressor.

Referring to FIG. 4, the substrate 140 during a taping process rotates about the rotational axis 124, as indicated by a curved arrow. Rotation of the substrate 140 can be effected by rotation of the rotor 120 (FIG. 1B). The substrate 140 is illustrated with broken lines in FIG. 4 because the substrate 140 is hidden beneath the tape 190 supported by the tape ring 150. The tape ring 150 can rotate together with the substrate 140 because the tape ring can be positioned on the substrate holder 130 by the locating pins 154.

The pressure arm 164 is shown positioned above the tape 190, and the nozzle 170 (see FIG. 1C) is positioned to direct fluid at the tape 190. In FIG. 4, fluid directed at the tape 190 has caused a portion 410 of the tape 190 to contact the

substrate 140. In the implementation shown in FIG. 4, the tape 190 includes an adhesive on a side proximate the substrate 140, and the portion 410 is adhered to the substrate 140. A boundary 420 is shown between the adhered portion 410 and a remainder of the tape 190. A nozzle path 430, shown as a spiral-shaped broken line, represents a path of the nozzle 170. The spiral nozzle path 430 is formed by a combination of rotation of the rotor 120 and translation of the nozzle 170 along an x direction shown in FIG. 4. By moving the nozzle 170 in an outward spiral relative to the tape 190 and substrate 140, the tape 190 can be uniformly and smoothly adhered to the substrate 190 with reduced inclusion of air bubbles as compared to some other methods, as discussed further below.

FIGS. 5A and 5B are schematic representations of portions of an alternative implementation of a taping apparatus 100. A pressure arm 164′ is shown positioned above a tape 190. The pressure arm 164′ includes a spherical bearing 510 having a diameter D_B. The bearing 510 is positioned in a bearing cavity 530. The bearing cavity 530 is configured such that the bearing 510 can translate some distance in a z direction. The bearing 510 can be retained in the pressure arm 164′ due to a cavity diameter D_C being about equal to or smaller than the bearing diameter D_B. Alternatively, the bearing 510 can be retained in some other suitable manner that allows the bearing 510 to rotate or roll. In some implementations, the bearing 510 can be held by the bearing cavity 520 in a fixed lateral position relative to the pressure arm 164′. The bearing cavity 530 can be fluidically connected by the fluid passage 177 to the fitting 174 and, in turn, the hose 176. The pressure arm 164′ and the bearing 510 can be positioned at a distance N_B above the tape 190, and the tape 190 can be positioned at a tape-to-substrate distance T_B above the substrate 140.

In operation, the bearing 510 can be held away from the tape 190 by negative pressure, such as lower than atmospheric pressure, within the fluid passage 177. The negative pressure, which can also be referred to as vacuum or vacuum pressure, can be caused by a negative pressure tank (not shown) fluidically connected to the hose 176. Negative pressure can be maintained in the negative pressure tank by a pump (not shown). Some air may leak past the bearing 510 and flow according to the arrows shown in FIG. 5A.

To apply pressure to the tape 190, the negative pressure can be released and the bearing 510 can be permitted to fall by force of gravity and exert a force or

pressure against the tape 190. This force or pressure in a region R′ can cause the tape 190 to deflect and contact the substrate 140. Where a side of the tape 190 proximate the substrate 140 includes adhesive, the tape 190 can thus be adhered to the substrate 140. The bearing 510 can be moved on the tape 190 in a manner as discussed with respect to FIG. 4. Size or weight of the bearing 510 can be configured to exert a desired force or pressure. In some implementations, a positive pressure can be applied to the bearing 510 by fluid in the fluid passage 177.

FIG. 6 is a flow diagram of a method 600 of taping a substrate 140 that can use the apparatus described with respect to FIGS. 5A and 5B. The substrate 140 can be placed on the rotor 120, such as on the substrate holder 130 (step 610). The tape 190 supported by the tape ring 150 can be positioned proximate the substrate 140 (step 620). The rotor 120 can be rotated about the rotation axis 124 (step 630). The rotating can be done, for example, at the rotation speed described with respect to FIG. 2. The bearing 510 can be positioned above the tape 190, such as along the rotational axis 124 (step 640). This positioning of the bearing 510 can be performed before or after a start of rotating of the rotor 120. Fluid can be flowed through the nozzle 170 and can be directed at the tape 190 (step 650). The bearing 510 can be translated radially outward from the rotational axis 124, such as perpendicular to the rotational axis 124 (step 660). The bearing 510 can be supported laterally by the bearing cavity 530. A speed of translation can be as described above with respect to FIG. 2. This speed can be varied during translation, for example, to maintain substantially constant tangentially velocity of the rotor 120 during translation along a radius, such as radius R (FIG. 4).

Exerting force in an outward spiral manner, as described above with reference to FIG. 4, can facilitate uniform application of tape 190 by preventing inclusion of air between the tape 190 and the substrate 140. Without being limited to any particular theory, applying the tape 190 to the substrate 140 forces air outward and out from between the tape 190 and the substrate 140 during taping. This outward forcing of air can operate where, during taping, no unadhered portion of tape 190 is enclosed by an adhered portion of tape 190. That is, for example, referring to FIG. 4, air should not be trapped so long as the adhered portion 410 is expanded radially outward and does not enclose any unadhered portion of tape 190.

In some implementations, rotational speed of the rotor 120 can be optimized as a function of radial position of the pressure arm 164 to minimize process time. For example, there can exist a maximum relative velocity between a pressure source, such as the nozzle 170 or bearing 510, and the substrate 140. This maximum relative velocity can be a highest relative velocity at which the tape 190 can be reliably uniformly applied to the substrate 140. The rotational speed of the rotor 120 can be adjusted to maintain the maximum relative velocity as the pressure arm 164 translates radially outward. For example, the rotational speed of the rotor 120 can be started at a certain highest speed when the pressure source, such as the nozzle 170 or bearing 510, is centered along the rotational axis 124. If rotational speed of the rotor 120 remains constant, relative velocity between the pressure source and the rotor 120 increases as the pressure arm 164 translated radially outward. Rotational speed of the rotor 120 can be decreased as the pressure arm 164 translates radially outward to compensate for this effect of outward radial movement.

In some implementations, it can be desirable to start the pressure source, such as the nozzle 170 or bearing 510, centered on the rotational axis 124. That way, when taping begins, air between the tape 190 and the substrate 140 near the rotational axis can be purged rather than trapped. Centering of the pressure source can be done by trial and error, such as by using a probe, or can be done optically, such as by using a laser. Centering can be done manually or automatically, such as by software and motors.

In some implementations, it can be desirable to begin rotation of the rotor 120 before applying pressure to the tape 190. Without being limited to any particular theory, applying pressure near the rotational axis 124 while the rotor 120 is rotating can facilitate outward expulsion of air from between the tape 190 and the substrate 140. Again without being limited to any particular theory, this expulsion of air may be facilitated by centrifugal force cause by rotation, by improved uniformity of pressure caused by rotation, or by some other mechanism.

In some alternative implementations, rather than moving (e.g., rotating) the substrate 140 and moving (e.g., translating) the pressure applicator 168, just the substrate 140 or just the pressure applicator 168 could be moved while the other component remains stationary to provide relative motion. For example, the substrate 140 can be stationary and the pressure applicator 168 can be configured to move in

the x direction as well as in a perpendicular y direction that is parallel with a surface of the substrate top surface 144 (see FIGS. 1A and 4). Movement of the pressure applicator 168 in the x and y directions can be effected by, for example, linear actuators (not shown), such as a linear actuator effecting movement in the x direction and another linear actuator effecting movement in the y direction.

When taping less than an entire surface of the substrate 140, such as when using an annular-shaped tape 190, it can be desirable to start a taping process by placing the region R of pressure near or along an innermost edge of the tape 190. The region R can also be started outward from the innermost edge and moved radially inwards, but air might more likely be trapped between the tape 190 and the substrate 140. Without being limited to any particular theory, inward motion, such as inward spiral motion, is more likely to trap air between the tape 190 and the substrate 140 because centrifugal forces may tend to force air in a radially outward direction, that is, away from the rotational axis 124.

In some implementations, the taping apparatus 100 can include two linear actuators (not shown) and no rotor 120. The linear actuators can be controlled, such as automatically controlled, such as software-controlled, to move the pressure arm 164 in a spiral manner, such as illustrated in FIG. 4.

Many types of tape 190 can be used to tape many types of substrates 140. A relatively stiffer tape 190 can be applied to a substrate 140 using relatively higher pressure, such as relatively higher fluid pressure, than would be used for a relatively less stiff tape 190. The substrate 140 can be a semiconductor wafer, such as a semiconductor wafer having features, such as MEMS features, on both the top surface 144 and the bottom surface 146. The top surface 144 can be taped using the taping apparatus 100 and the bottom surface 146 can then be taped using a tape roller or other conventional device, since the top surface 144 is protected by the tape 190. Also, because some implementations do not require rotation of the substrate 140, the taping apparatus 100 can be used for taping objects that are other than wafer-like in shape or other than circular in shape.

The above-described implementations can provide none, some, or all of the following advantages. The top surface of the substrate can be taped while the substrate is supported only at or near a circumference of an opposite bottom surface of the substrate, thereby prevent or mitigating damage to features on the bottom surface.

Tape applied to the top surface can be applied uniformly and smoothly so as to mitigate or prevent inclusion of air bubbles or formation of wrinkles in the tape. Mitigation or prevention of air bubbles can promote uniform taping without taping in a vacuum environment. That is, taping can be done under normal atmospheric conditions rather than in an evacuated vacuum chamber. Using fluid or bearing pressure can facilitate consistency of pressure and precision of pressure applied to the tape and the substrate. Using fluid can mitigate or prevent damage to features on the top surface of the substrate during taping. Using fluid can also help to purge debris between the tape and the substrate that might otherwise become trapped during taping.

The use of terminology such as "front," "back," "top," "bottom," "above," "below," and "beneath" throughout the specification and claims is for illustrative purposes only, to distinguish between various components of the system, the tape, the substrate, and other elements described herein. The use of such terminology does not imply a particular orientation of the tape, the substrate, or any other components. Similarly the use of any horizontal or vertical terms to describe elements is in relation to the implementations described. In other implementations, the same or similar elements can be oriented other than horizontally or vertically as the case may be.

A number of embodiments of the invention have been described. Nevertheless, it will be understood that various modifications may be made without departing from the spirit and scope of the invention. For example, pressure can be applied to the tape using a spring, such as by applying spring pressure to a bearing, a manipulator, or some other pressure applicator. As another example, relative motion between the pressure applicator and the substrate can be achieved using linear actuators and pressure can be applied in an outwardly moving region on the substrate. As another example, pressure can be applied to the tape in a region defined by an outwardly expanding annular ring, by a oval-shaped spiral, a square-shaped spiral, or some other radially outward pattern, shape, or path. As another example, pressure can be applied in a "zig zag" pattern from one side of the surface of the substrate to an opposite side. Accordingly, other embodiments are within the scope of the following claims.

WHAT IS CLAIMED IS:

1. A method for applying tape to a substrate, comprising:

positioning a tape proximate and substantially parallel to a surface of a substrate;

applying a pressure to a side of the tape opposite the surface in a region smaller than the surface to cause the tape to adhere to the substrate opposite the region; and

moving the region relative to the substrate in an outward radial direction while applying the pressure.

2. The method of claim 1, wherein no unadhered region of tape is enclosed by any adhered region of tape.

3. The method of claim 1, wherein the tape is adhered to the entire surface.

4. The method of claim 1, wherein moving the region is along an outward spiral.

5. The method of claim 1, wherein the region starts moving near a center of the substrate.

6. The method of claim 1, wherein applying the pressure includes directing a fluid against the side of the tape opposite the surface.

7. The method of claim 6, wherein the fluid is air.

8. The method of claim 1, wherein applying the pressure includes contacting a spherical bearing against the tape.

9. The method of claim 1, wherein the pressure is between about 5.0 psi and about 40 psi.

10. The method of claim 1, wherein moving the region includes rotating the substrate and tape.

11. The method of claim 10, wherein the rotating is at a rate of between about 20 rpm and about 90 rpm.

12. The method of claim 10, wherein the rotating is at a rate that is adjustable.

13. The method of claim 10, wherein moving the region includes translating the region relative to the substrate.

14. The method of claim 13, wherein the translating is along a direction perpendicular to a rotational axis of the substrate.

15. The method of claim 1, wherein an area of the region is between about 0.004% and about 10% of an area of the substrate.

16. The method of claim 1, wherein positioning the tape is at between about 0.5 millimeters and about 3.0 millimeters from the substrate.

17. An apparatus for applying tape to a substrate, comprising:

a support configured to hold a substrate and to hold a tape proximate a surface of the substrate and stationary relative to the substrate;

a pressure source configured to apply pressure to a region of the tape smaller than the surface in both an x direction and a y direction, the x and y directions being parallel to the surface and perpendicular to one another;

a motor coupled to one or more of the pressure source and the support and configured to move the region relative to the substrate.

18. The apparatus of claim 17, wherein the support is configured to rotate the substrate about a rotational axis.

19. The apparatus of claim 18, wherein the pressure source is configured to translate substantially along a direction that is perpendicular to the rotational axis.

20. The apparatus of claim 17, wherein the pressure source includes a nozzle configured to direct a flow of fluid against a side of the tape opposite the surface.

21. The apparatus of claim 20, wherein an outlet of the nozzle is positioned between about 0.5 millimeters and about 3.0 millimeters from the side of the tape opposite the surface.

22. The apparatus of claim 20, further comprising:

a filter configured to filter the flow of fluid.

23. The apparatus of claim 17, wherein the sheet of tape is positioned between about 0.5 millimeters and about 3.0 millimeters from the substrate.

24. A system for applying tape to a substrate, comprising:

a substrate support configured to hold a substrate;

a tape support configured to hold a tape proximate and substantially parallel to a surface of the substrate;

means for applying pressure to a side of the tape opposite the surface in a region smaller than the substrate; and

means for moving the region.

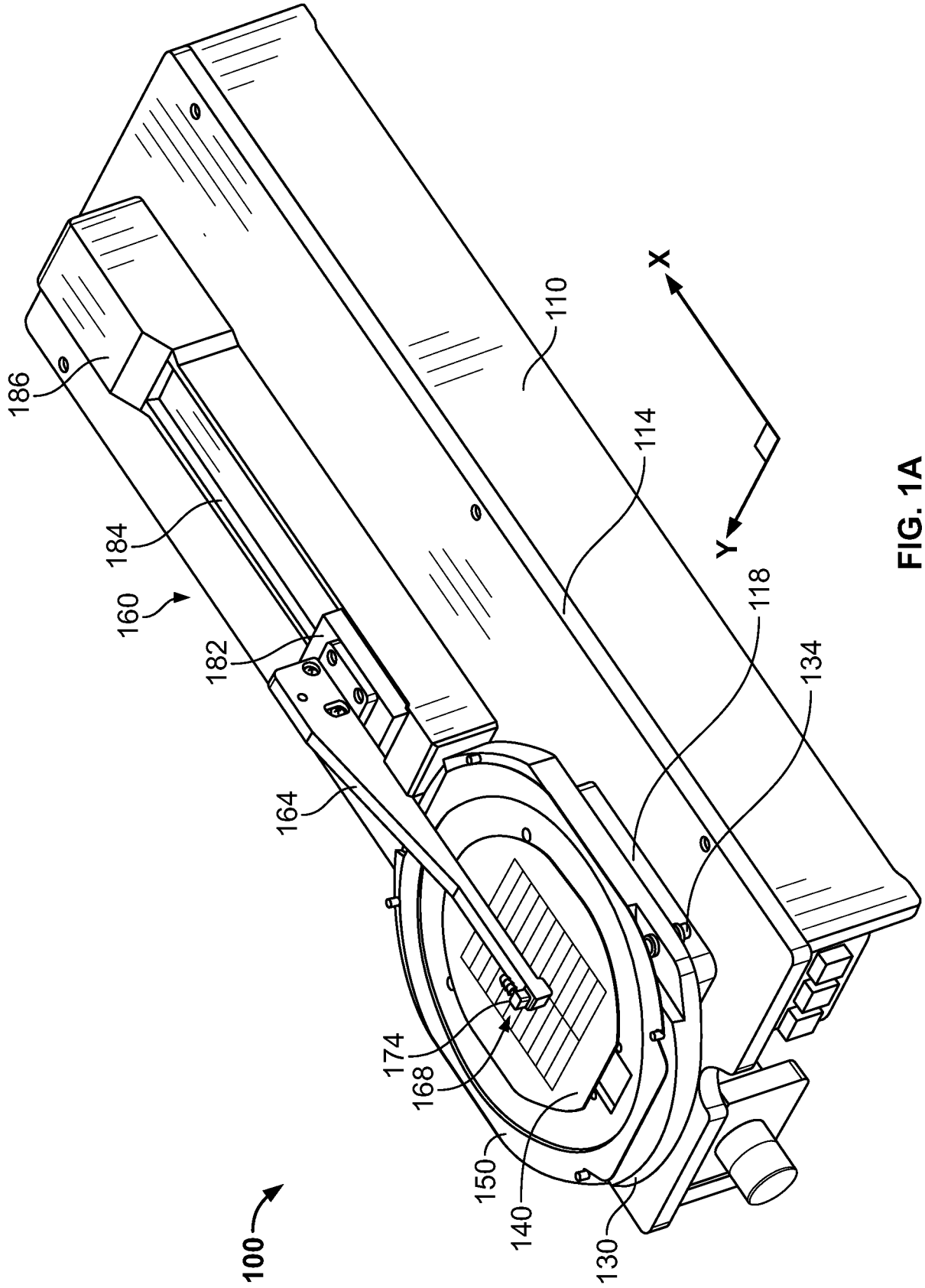

FIG. 1A

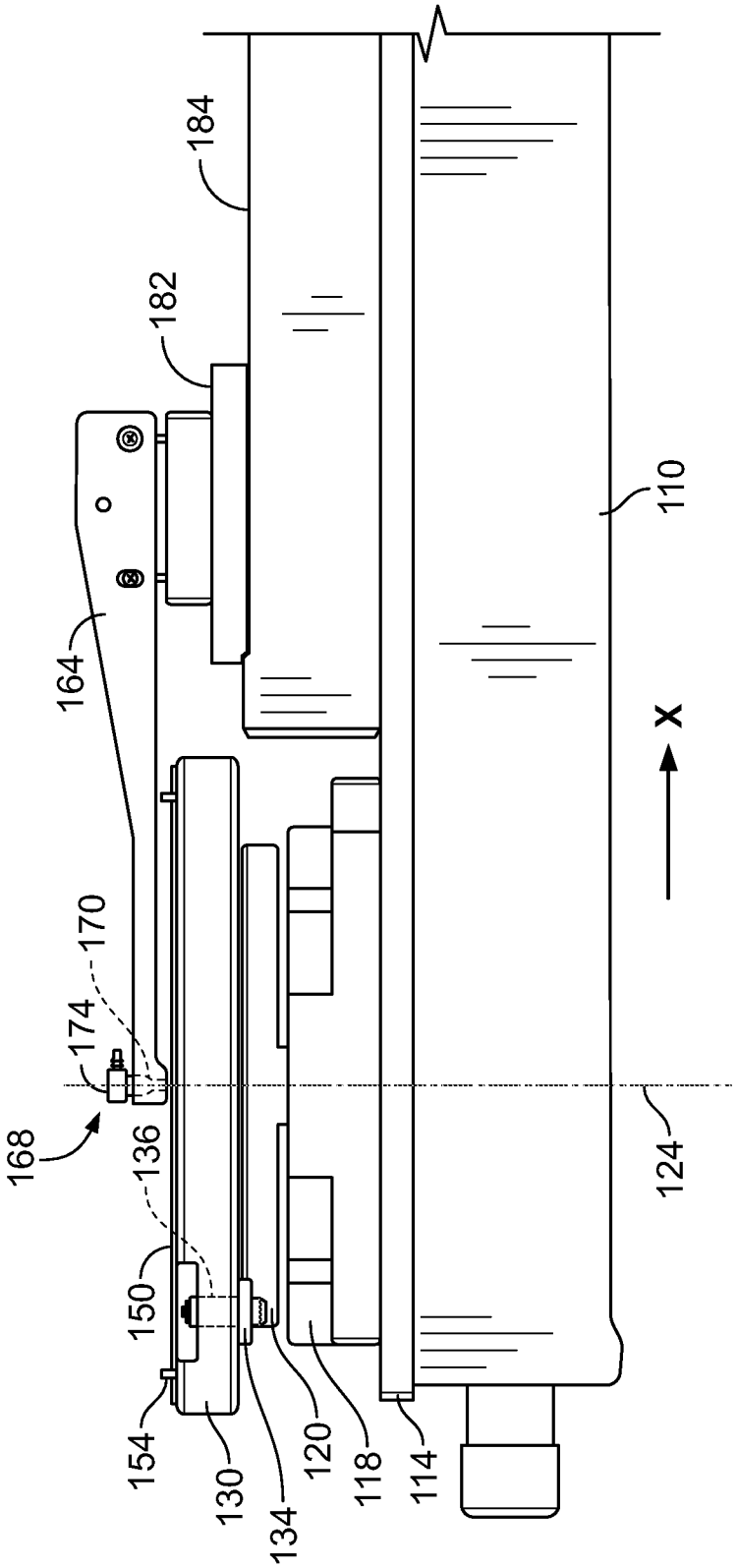

FIG. 1B

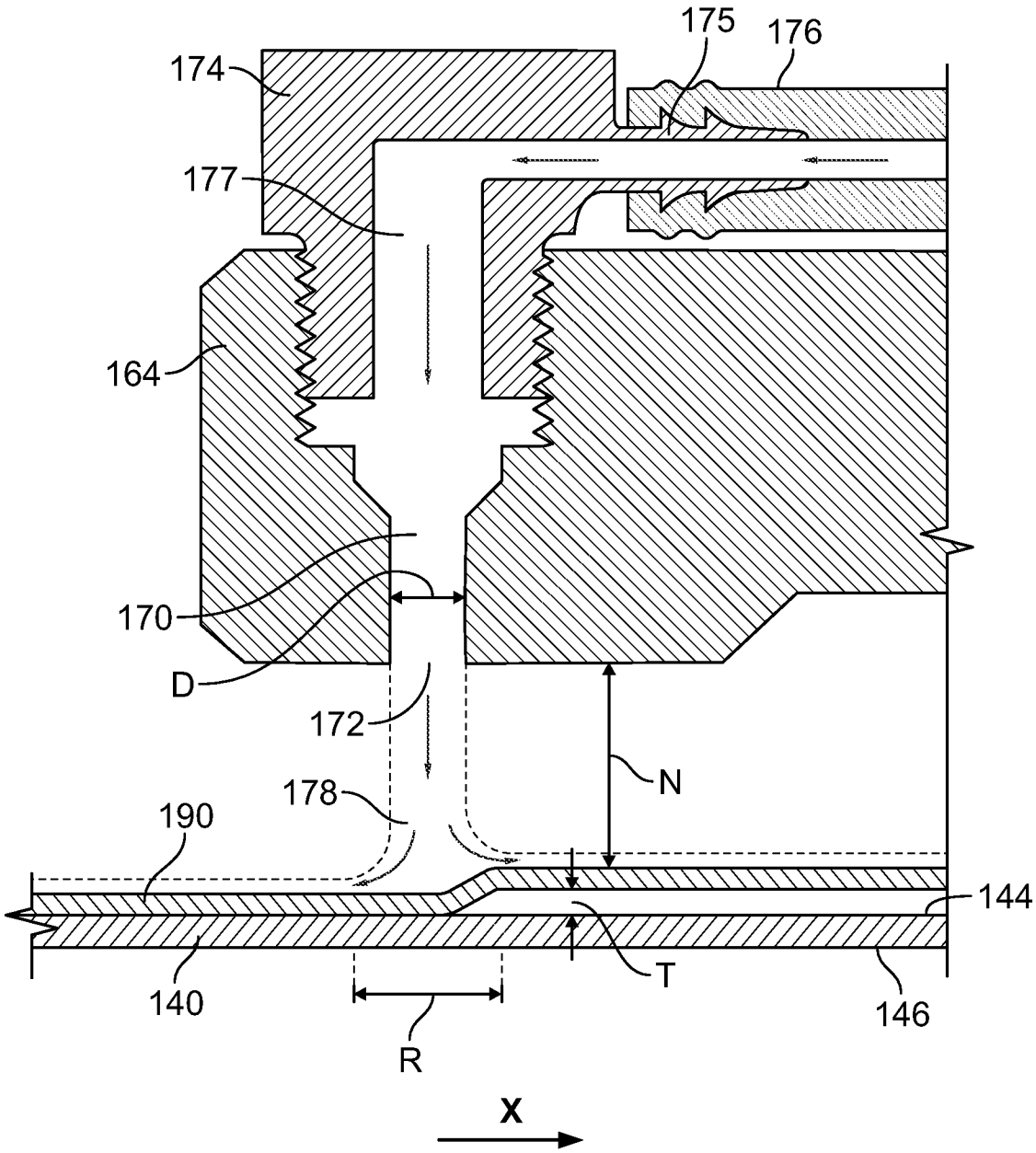

FIG. 1C

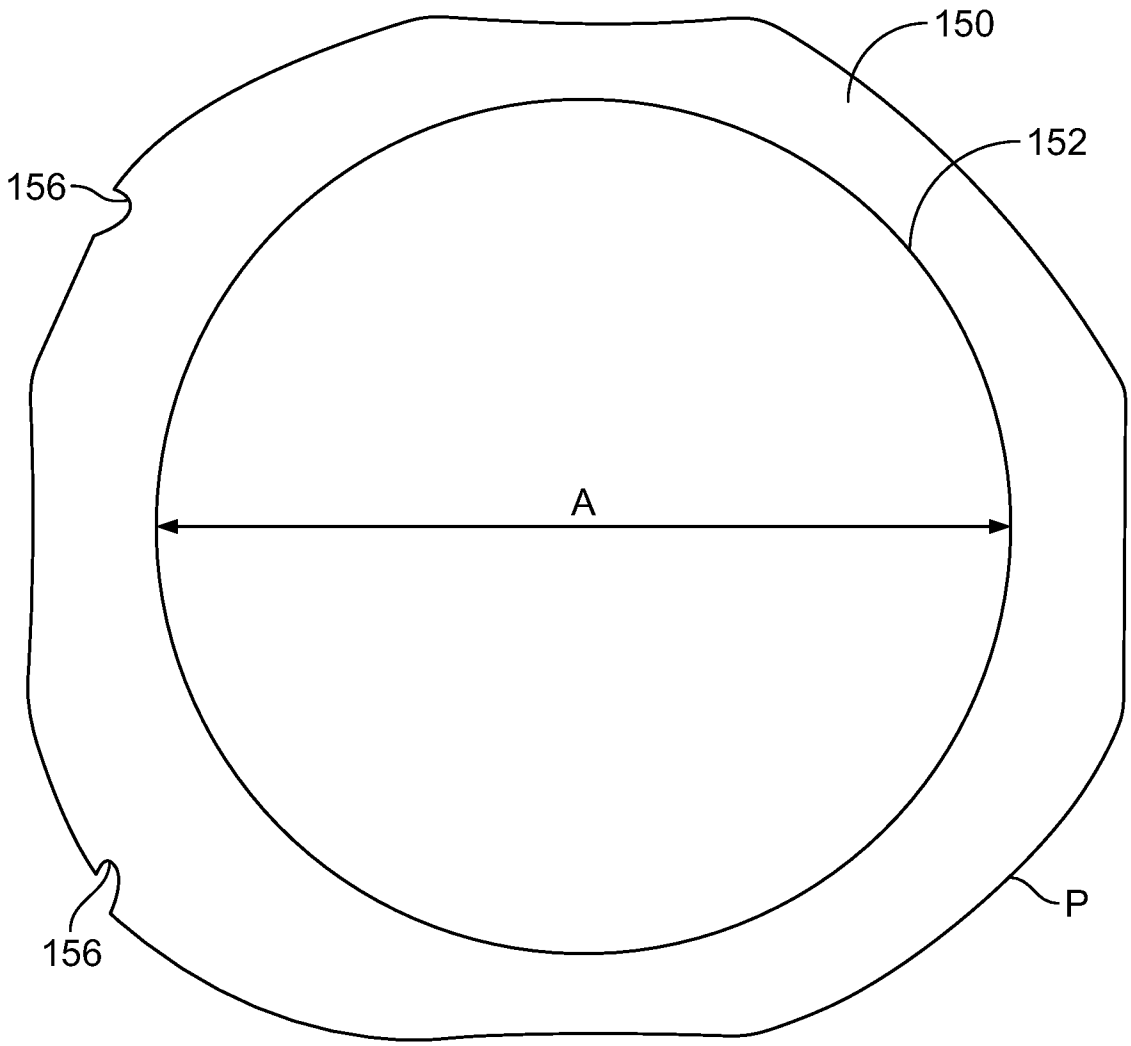

FIG. 1D

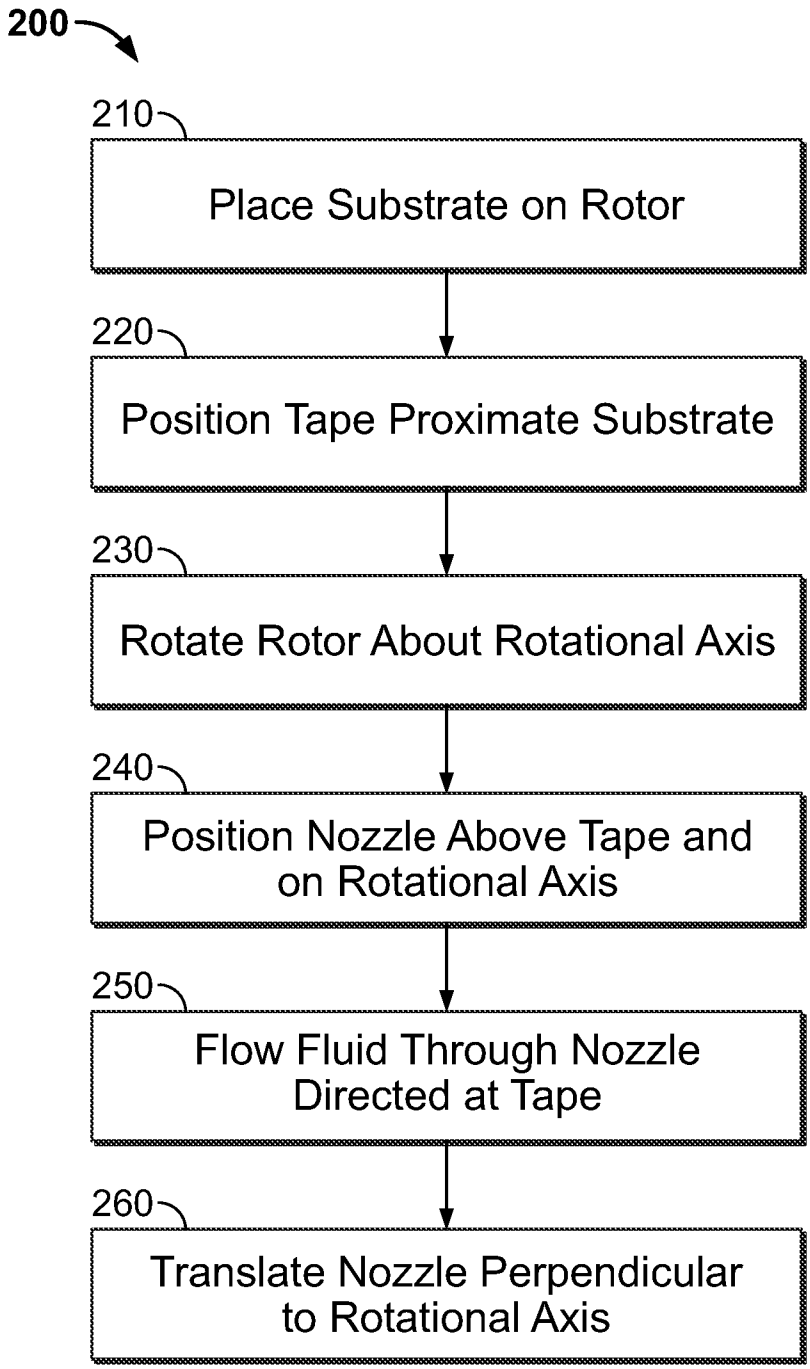
200
210
Place Substrate on Rotor
220
Position Tape Proximate Substrate
230
Rotate Rotor About Rotational Axis
240
Position Nozzle Above Tape and on Rotational Axis
250
Flow Fluid Through Nozzle Directed at Tape
260
Translate Nozzle Perpendicular to Rotational Axis

FIG. 2

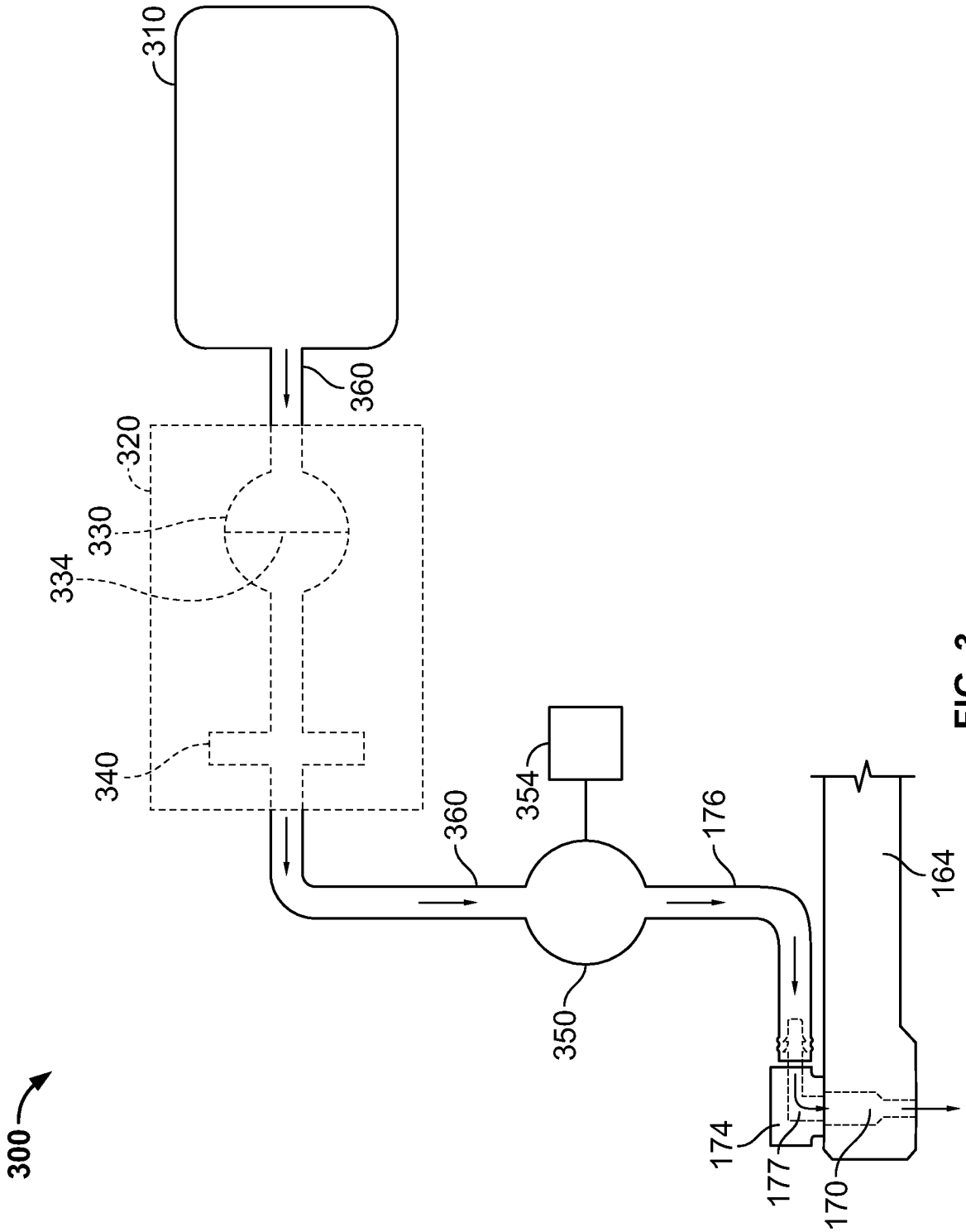

FIG. 3

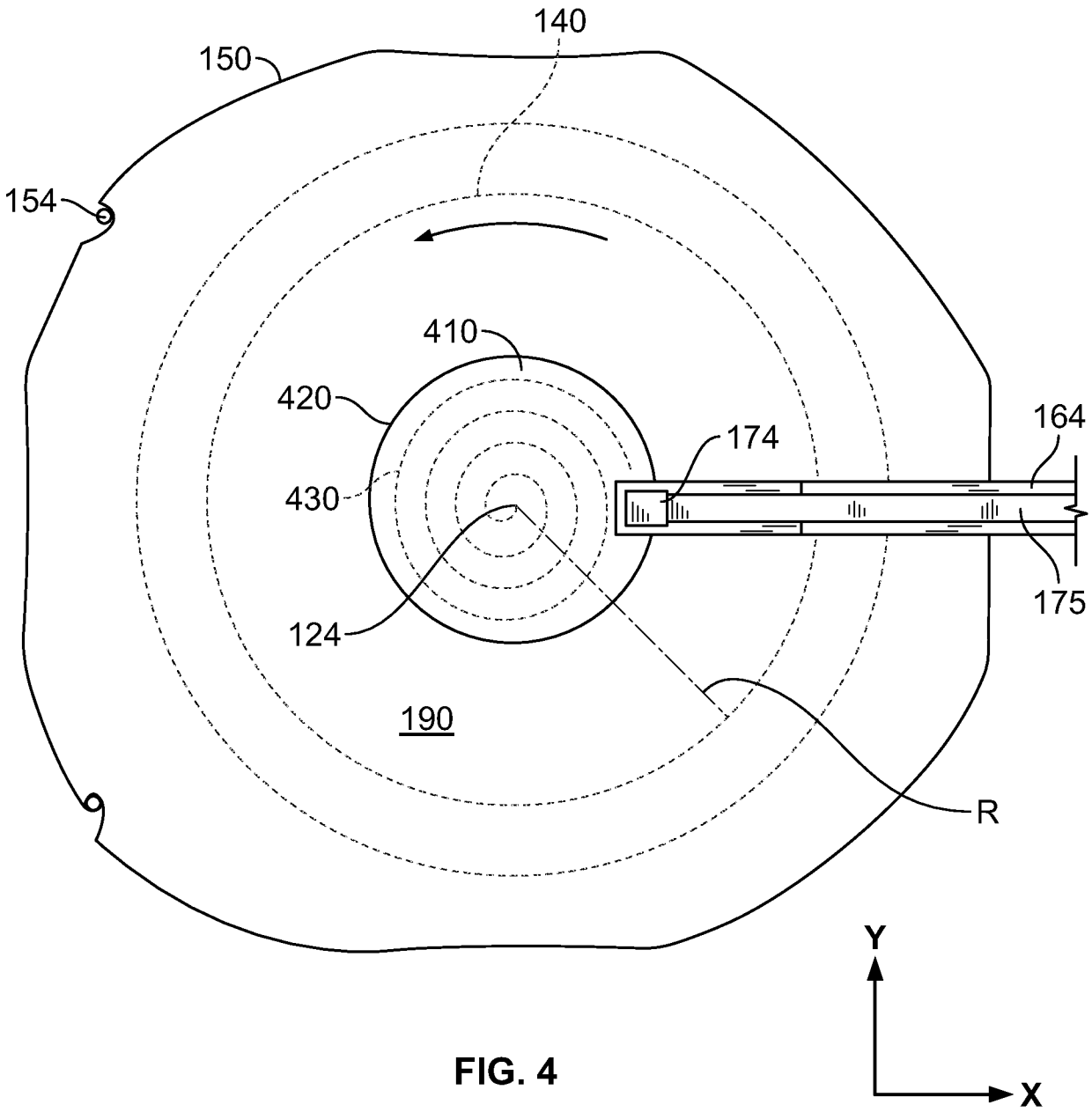

FIG. 4

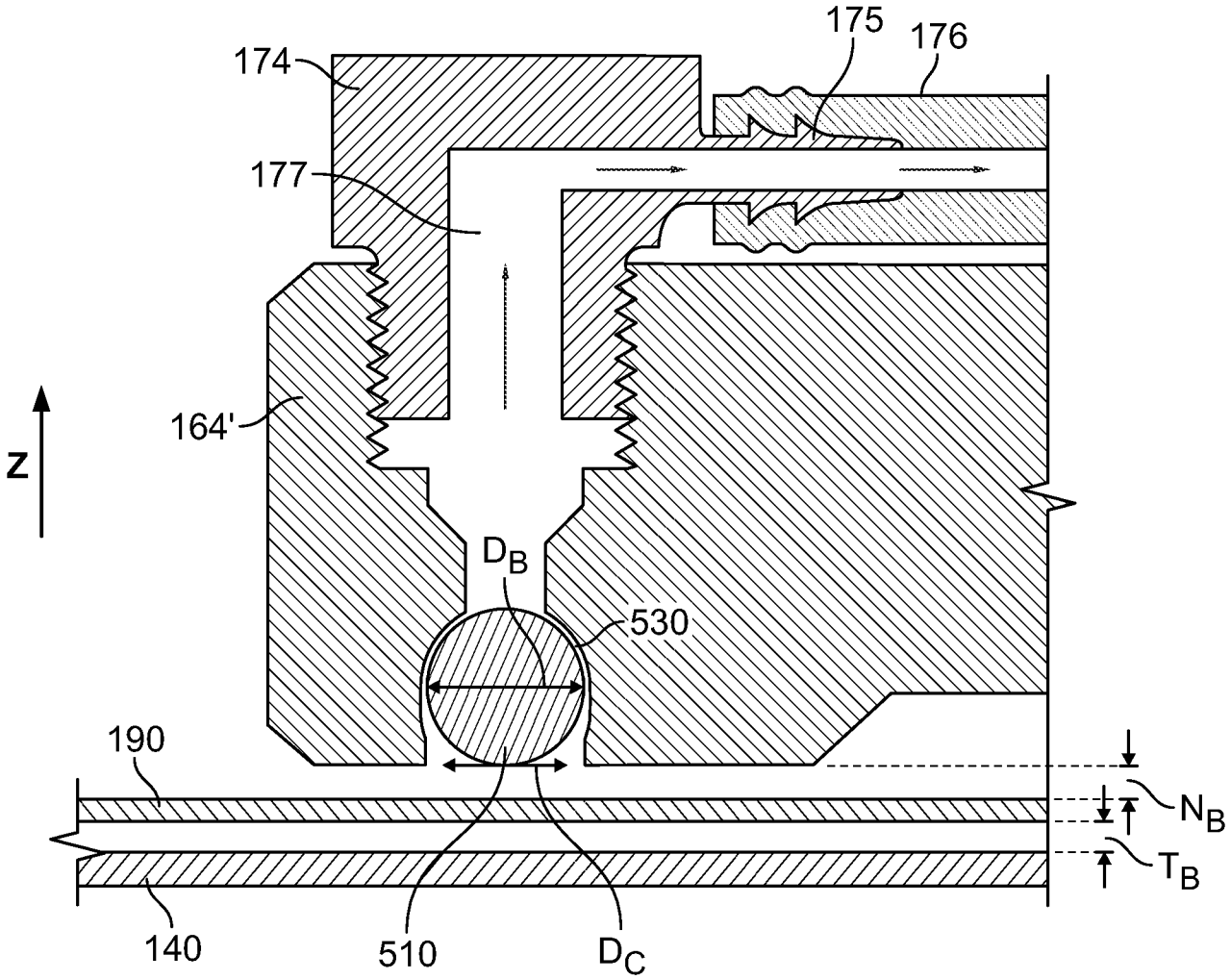
175
176
174
177
164'
Z
D_B
530
190
N_B
T_B
140
510
D_C

FIG. 5A

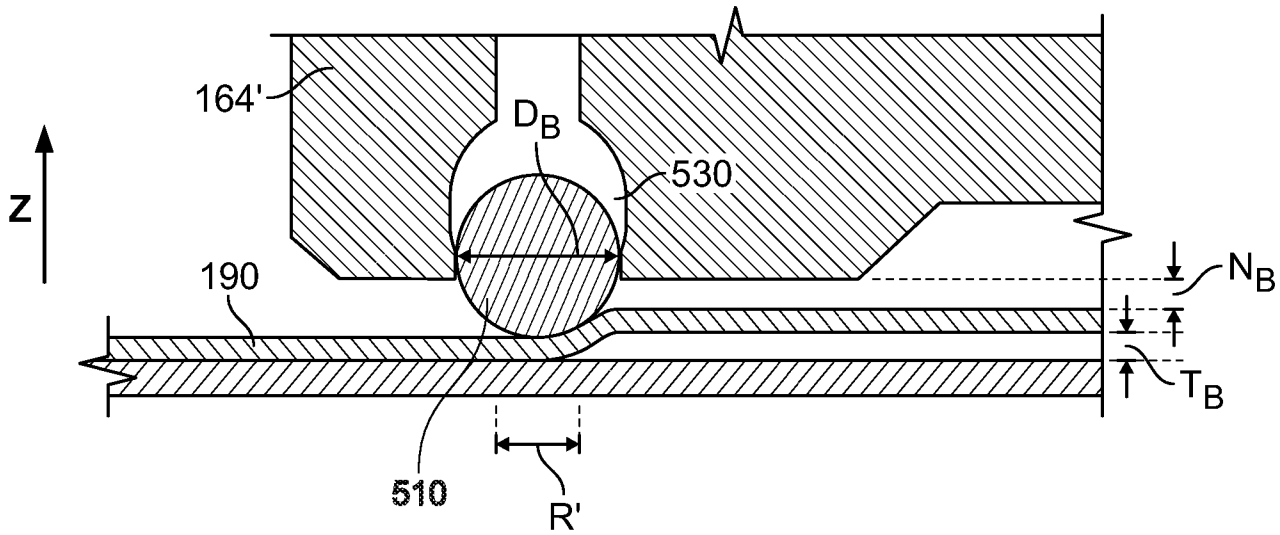
164'
D_B
530
Z
190
N_B
T_B
510
R'

FIG. 5B

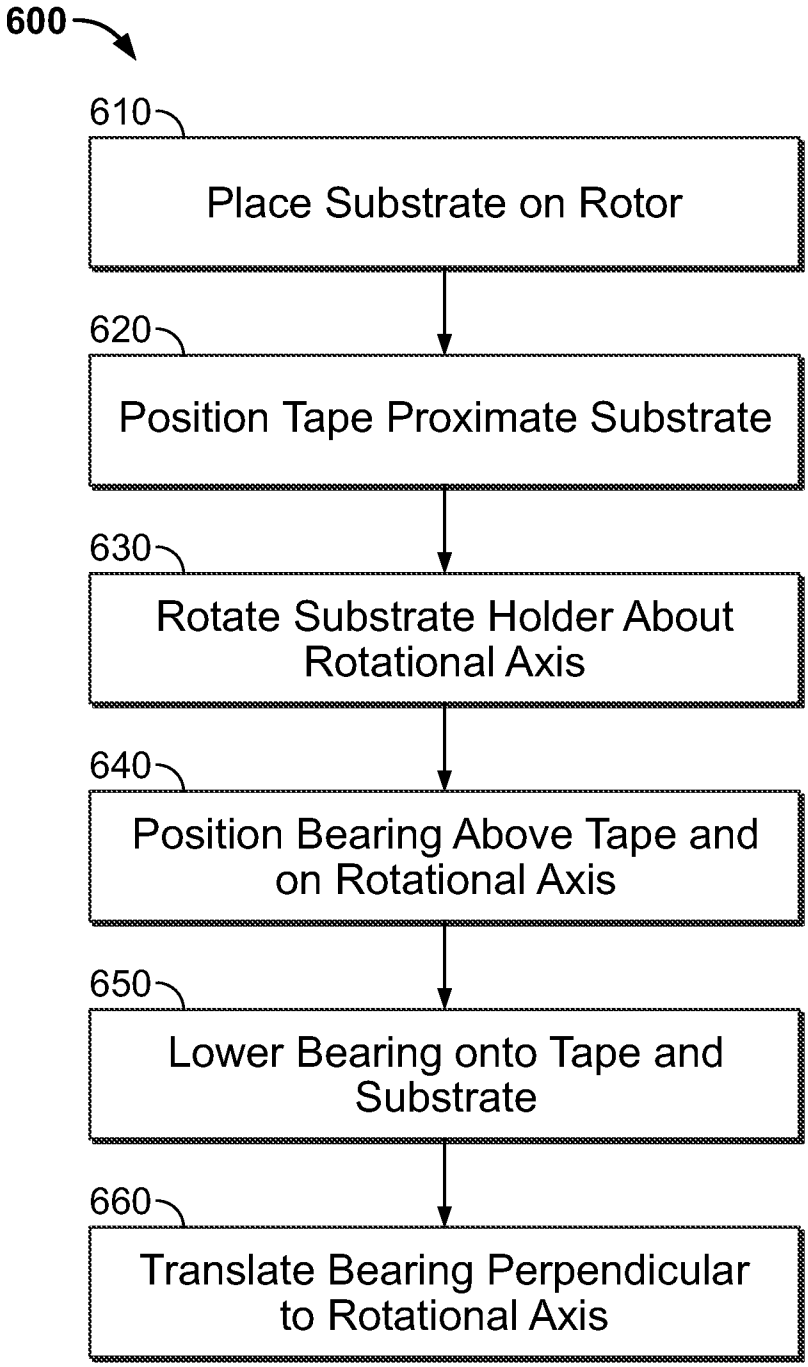
600
610
Place Substrate on Rotor
620
Position Tape Proximate Substrate
630
Rotate Substrate Holder About Rotational Axis
640
Position Bearing Above Tape and on Rotational Axis
650
Lower Bearing onto Tape and Substrate
660
Translate Bearing Perpendicular to Rotational Axis

FIG. 6