Sept. 15, 1959 H. C. KING 2,904,617

RESILIENT TUBE SUPPORT

Filed Jan. 8, 1953

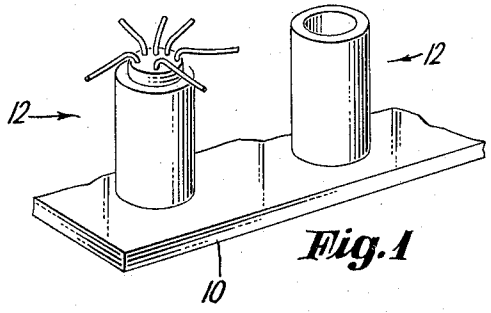

Fig. 1

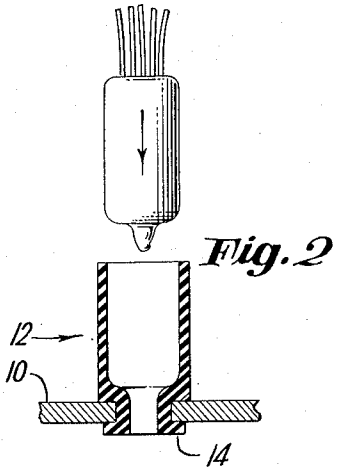

Fig. 2

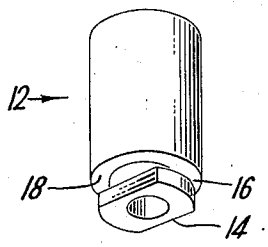

Fig. 3

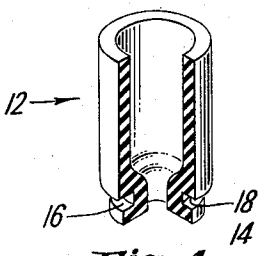

Fig. 4

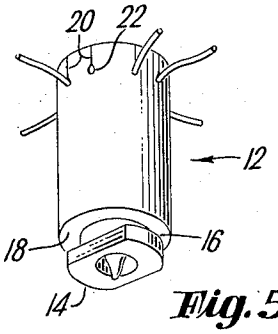

Fig. 5

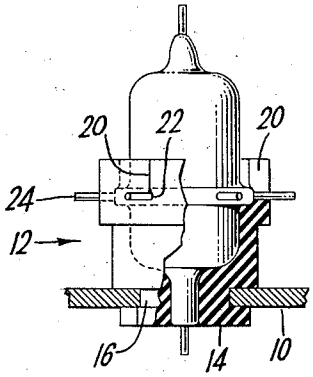

Fig. 6

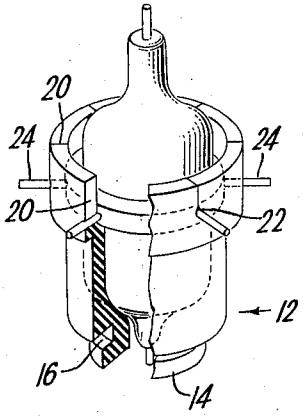

Fig. 7

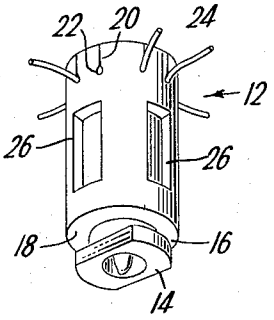

Fig. 8

INVENTOR
HARRY C. KING
BY John A. Harvey
ATTORNEY

United States Patent Office 2,904,617 Patented Sept. 15, 1959

2,904,617

RESILIENT TUBE SUPPORT

Harry C. King, Lancaster, N.Y., assignor, by mesne assignments, to Sylvania Electric Products Inc., Wilmington, Del., a corporation of Delaware

Application January 8, 1953, Serial No. 330,230

4 Claims. (Cl. 174—52)

This invention relates to resilient tube mounts, particularly for mounting tubes of the subminiature variety.

Various intricate and crude ways have been evolved in the past to mount small radio tubes, such as securing the tubes to a support by passing adhesive tape over the tube and tacking the ends of the tape to the support or by securing pigtail leads of the tube to circuit terminals, or to a terminal plug insertable in a socket on the support, the tube being otherwise free and subject to damage by bending about its leads when the radio apparatus is either shifted for any reason or subjected to vibration.

It is an object of this invention to provide a radio chassis having means for overcoming the above objections and having means for economically, neatly mounting radio tubes thereon, at the same time protecting the tubes against damage.

It is a further object of the invention to provide a tube mounting means which can readily be attached to a chassis and as readily detached therefrom.

It is another object of the invention to provide a tube mount which shall resiliently support a tube on a chassis.

It is a further object of the invention to provide a tube mount which shall releasably yieldingly retain a radio tube therein.

It is yet a further object of the invention to support a radio tube and in an orderly fashion provides access to the tube terminals.

Other objects of the invention will be apparent after reading the following specification in conjunction with the accompanying drawing in which:

Fig. 1 is a perspective view of the top of a chassis with several of my tube mounting means thereon, one of them having a tube therein ready for attachment to circuit elements, the circuit elements not being shown.

Fig. 2 is a cross sectional view through one of the tube mounting means and the adjacent chassis portion, and showing a tube in position to be inserted in the mount.

Fig. 3 is a perspective view of a tube mount made in accordance with my invention.

Fig. 4 is a vertical sectional view thereof.

Fig. 5 is a perspective view of another form of mount with a tube held therein.

Fig. 6 is a vertical sectional view of still another form of mount and adjacent chassis part, an acorn type tube being held in the mount.

Fig. 7 is a perspective sectional view of a mount with an acorn type tube therein.

Fig. 8 is a perspective view of a modified form of mount having openings in the wall of the mount with a tube therein.

In accordance with the invention there is provided a chassis **10** having holes punched therein of a size to accommodate the mounting portion of the tube mount. For mounting subminiature tubes, for example, those having T–3 envelopes, that is nominally ⅜ of an inch in diameter, the holes may be approximately 9/32″ in diameter.

Mounted in the chassis by means of these holes are the

resilient tube mounting means **12**, these mounting means each comprising a hollow resilient finger and a grommet-like portion.

The mounting means is contoured on the interior to snugly conform with the envelope of a tube as shown in Figs. 6 and 7.

The grommet-like portion may be considered as comprising the two diametrical flanged elements **14**, the cylindrical reduced diameter neck portion **16** and the shoulder portion **18**. The entire tube mount is made of resilient material and the grommet-like end of the mount may be snapped into a hole of the chassis much like rubber grommets are now snapped into place. This grommet-like end of the mount provides for an easy mode of attachment of the mount to the chassis and facilitates quick replacement of the mount with or without a tube therein.

Because of the resilient character of the mount, complete cushioning is provided in all directions including movement toward the chassis and movement in directions tending to rotate the mount about the grommet connection of the mount to the chassis. It is apparent that, if desired, the tubeholding portion of the mount may be of a length less than, equal to or longer than the tube, which tube is releasably resiliently held therein. The diameter of the internal opening of the mount is designed to be just under the external diameter of a tube, as for example ⅜″ in the case of the mount housing a T–3 type tube. As a result, the tube may be resiliently yet securely held in place either above or below the chassis. Furthermore, the tube may be positioned within the mount in various positions longitudinally of the axis of the mount, the tube being rotatable about its axis to any desired orientation.

The leads from the tube may be splayed out over the mount or, by suitable height of mount, the leads may be supported by the mount itself. One method of effecting this result is to provide the tube with side wall slits **20** leading to perforated portions **22**, the leads being forced down through the slits and into the perforated portions, the edges of the slits then resiliently closing toward each other and enveloping the leads.

In Figs. 6 and 7 there is disclosed a mounting of a tube with rigid radial leads **24**, such as an acorn tube type 954, its leads extending radially outwardly of the mount.

In order to effect a saving of resilient material, to allow for dissipation of heat and to reduce stray capacitances, the mount **12** may be provided with side wall windows **26** as shown in Fig. 8, leaving the least amount of resilient material consistent with its function of supporting the radio tube. Obviously the internal configuration of the mount may be oval to accommodate flat tubes, and the grommets and holes in the chassis can have other but corresponding shapes.

From the above illustrations, it is apparent that my invention is capable of various modifications without departing from the spirit of my invention as claimed herein.

I claim as my invention:

1. An electron tube chassis mount for supporting an electron tube having an envelope of given transverse cross-sectional configurations along its length comprising a resilient housing of insulating material formed to provide side walls of at least sufficient thickness to be self supporting and a bore of transverse cross-sectional configuration along its length conforming substantially to the corresponding external cross-sectional configurations of the electron tube envelope to be received in said bore, said bore being open at one end for allowing removal of the electron tube and at the other end having a seat substantially conforming in contour to the end of the tube envelope to be received and a grommet structure external and beyond said other end of the bore for securing said mount to a mounting plate.

2. An electron tube chassis mount for supporting an

electron tube having an envelope of given transverse cross-sectional configurations along its length comprising a resilient housing of insulating material formed to provide side walls of at least sufficient thickness to be self supporting and a bore of transverse cross-sectional configuration along its length conforming substantially to the corresponding external cross-sectional configurations of the electron tube envelope to be received in said bore, said bore being open at one end for allowing removal of the electron tube and at the other end having a seat substantially conforming in contour to the end of the tube envelope to be received and a grommet structure including an end flange with substantially parallel flattened rim portions external and beyond said other end of the bore for securing said mount to an apertured mounting plate.

3. A resilient tube holder for holding an electron tube having an envelope of given shape comprising resilient insulating material having a bore of transverse cross-sectional configurations along its length conforming substantially to the corresponding external cross-sectional configurations of the electron tube envelope to be held in said bore, said bore having at one end a seat conforming in contour to the end of said tube envelope to position said tube envelope in said bore and said holder having at least one longitudinally-extending radial slot adapted to receive a tube terminal arranged radially of

said tube, and means adapted to secure said holder to a mounting plate.

4. A resilient tube holder for holding an electron tube having an envelope of given shape comprising resilient insulating material having an open mouth bore of transverse cross-sectional configurations along its length conforming to the corresponding external cross-sectional configurations of the electron tube envelope to be held in said bore, said bore terminating in a shoulder conforming in contour to the end of said tube envelope to position said tube envelope in said bore and said holder including at the open mouth portion of said bore a plurality of longitudinally-extending radial slots adapted to receive radially-positioned tube terminals, and means adapted to secure said holder to a mounting plate.

References Cited in the file of this patent

UNITED STATES PATENTS

1,693,246	Mix	Nov. 27, 1928
1,800,578	Webb	Apr. 14, 1931
2,283,689	Mitchell	May 19, 1942
2,633,483	Hafke	Mar. 31, 1953
2,648,024	Yeater	Aug. 4, 1953
2,674,646	Schoch	Apr. 6, 1954
2,706,742	Ehlers	Apr. 19, 1955
2,740,001	Vergilio et al.	Mar. 27, 1956