(19) Europäisches Patentamt
European Patent Office
Office européen des brevets

(11) EP 3 301 871 A1

(12) EUROPEAN PATENT APPLICATION

(43) Date of publication:
04.04.2018 Bulletin 2018/14

(21) Application number: **17020525.6**

(22) Date of filing: **12.04.2007**

(51) Int Cl.:
H04L 12/801 *(2013.01)* ***H04L 12/721*** *(2013.01)*
H04L 12/54 *(2013.01)*

(84) Designated Contracting States:
AT BE BG CH CY CZ DE DK EE ES FI FR GB GR HU IE IS IT LI LT LU LV MC MT NL PL PT RO SE SI SK TR
Designated Extension States:
AL BA HR MK RS

(30) Priority: **12.04.2006 US 792236 P**
05.10.2006 US 849650 P

(62) Document number(s) of the earlier application(s) in accordance with Art. 76 EPC:
17020026.5 / 3 190 756
10000017.3 / 2 178 254
07811844.5 / 2 005 674

(71) Applicant: **TQ Delta, LLC**
Austin TX 78746 (US)

(72) Inventor: **TZANNES, Marcos C.**
Petaluma, CA 94954 (US)

(74) Representative: **Von Rohr Patentanwälte Partnerschaft mbB**
Rüttenscheider Straße 62
45130 Essen (DE)

Remarks:
This application was filed on 10-11-2017 as a divisional application to the application mentioned under INID code 62.

(54) PACKET RETRANSMISSION AND MEMORY SHARING

(57) Through the identification of different packet-types, packets can be handled based on an assigned packet handling identifier. This identifier can, for example, enable forwarding of latency-sensitive packets without delay and allow error-sensitive packets to be stored for possible retransmission. In another embodiment, and optionally in conjunction with retransmission protocols including a packet handling identifier, a memory used for retransmission of packets can be shared with other transceiver functionality such as, coding, decoding, interleaving, deinterleaving, error correction, and the like.

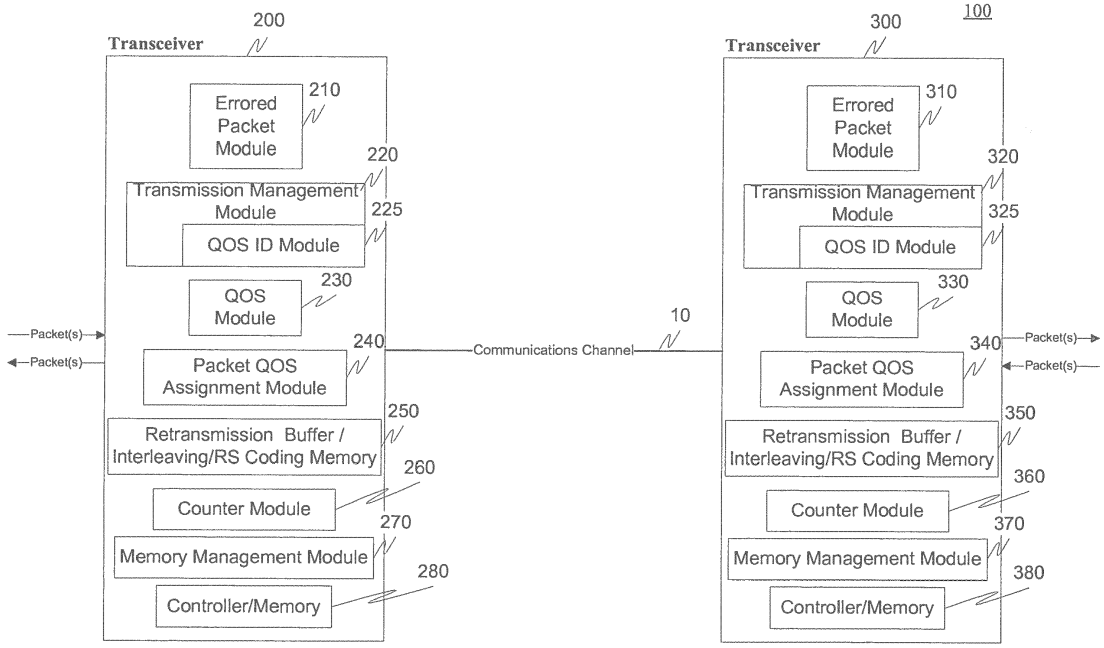

Fig. 1

EP 3 301 871 A1

Description

RELATED APPLICATION DATA

[0001] This application claims the benefit of and priority under 35 U.S.C. § 119(e) to U.S. Patent Application Nos. 60/792,236, filed April 12, 2006, entitled "xDSL Packet Retransmission Mechanism," and 60/849,650, filed October 5, 2006, entitled "xDSL Packet Retransmission Mechanism with Examples," which are both incorporated herein by reference in their entirety.

BACKGROUND

Field of the Invention

[0002] This invention generally relates to communication systems. More specifically, an exemplary embodiment of this invention relates to retransmission of packets in a communication environment. An exemplary embodiment of this invention also relates to memory sharing between transmission functions and other transceiver functions.

SUMMARY

[0003] Exemplary aspects of the invention relate to handling of packets and the assignment of a packet handling identifier. Exemplary aspects relate to sharing of resources between retransmitted packets and other transceiver functions. In addition, exemplary aspects relate to sharing of resources between packets associated with the packet handling identifier and other transceiver functions.

[0004] More specifically, aspects of the invention relate to assigning a packet handling identifier to one or more packets. Based on the packet handling identifier, a packet can either be, for example, forwarded directly to another communication device (or layer) or, alternatively, held for possible retransmission protocols. For example, packets received from, for example, a higher-layer of a communication device, can be designated to have a specific packet handling identifier, such as a Quality of Service (QOS) level. The QOS level of a packet indicates the importance of certain service metrics (or characteristics) of one or more packets.

[0005] Two exemplary QOS metrics are delay (or latency) and Packet Error Rate (PER). While these two metrics are used for illustrative purposes herein, it should be appreciated that other metrics can also be used with this invention. For example, other QOS metrics could include one or more of a Bit Error Rate (BER), data rate, delay variation (or jitter), packet loss rate, time between error events (TBE), or the like.

[0006] As an example, in the case where the two QOS metrics are latency and PER, packets containing, for example, video information (such as IPTV) may have the requirement for a very low packet error rate but can often tolerate higher delay. In contrast, voice or data (e.g., gaming) traffic may have very low latency requirements but can tolerate a higher packet error rate. For this particular example, the video packets could be designated as "low-PER" QOS packets and the voice or data packets could be designated as "low-latency" QOS packets. For example, a specific QOS identifier could be assigned to the low-latency packets while a different QOS identifier could be assigned to the low-PER packets. The low-latency packets could be forwarded directly to another transceiver, or a higher layer, while the low-PER packets can be stored in a retransmission buffer, e.g., memory, that can be used to reduce packet error.

[0007] As mentioned above, exemplary aspects also relate to sharing of resources between a retransmission function and other transceiver functions.

[0008] The exemplary systems and methods of this invention can utilize memory, such as a retransmission buffer, for the storing of packets for retransmission functions. Since other transceiver functions may also require memory to perform certain functionality, an exemplary aspect of this invention also relates to sharing the memory for retransmission functions with the memory required for other transceiver functions. For example, memory can be dynamically allocated based on configuration settings or noise conditions and, for example, the memory divided between one or more of interleaving/deinterleaving, RS Coding/Decoding functionality and the functionality used retransmission.

[0009] Aspects of the invention thus relate to identification of one or more packets.

[0010] Additional aspects of the invention relate to identifying one or more packets that can be retransmitted.

[0011] Still further aspects of the invention relate to identifying one or more packets that should not be retransmitted.

[0012] Aspects of the invention also relate to retransmission of one or more of an IP packet, an Ethernet packet, an ATM cell, a PTM packet, an ADSL Mux-data frame, a PTM-TC codeword, and RS codeword and a DMT symbols.

[0013] Still further aspects of the invention relate to appending an identifier to a packet.

[0014] Still further aspects of the invention relate to appending a sequence identifier to at least one packet.

[0015] Aspects of the invention also relate to routing one or more packets based on a packet handling identifier.

[0016] Aspects of the invention also relate to retransmitting a packet.

[0017] Aspects of the invention further relate to retransmit a packet based on a retransmission request.

[0018] Still further aspects of the invention relate to sharing memory between a retransmission function and one or more of an interleaver, deinterleaver, coder, decoder and other transceiver functionalities.

[0019] Other more specific aspects of the invention relate to sharing memory between a retransmission buffer (or memory) and interleaving/deinterleaving and/or coding/decoding functionality.

[0020] Additional exemplary, non-limiting aspects of the invention are:

1. A method of packet retransmission comprising:

transmitting or receiving a plurality of packets;
identifying at least one packet of the plurality of packets as a packet that should not be retransmitted.

2. The method of aspect 1, wherein the packet is any grouping of bytes.

3. The method of aspect 1, wherein the packet is one of an IP packet, an Ethernet packet, an ATM cell, a PTM packet, an ADSL Mux-Data Frame, a PTM-TC codeword, an RS codeword and a DMT symbol.

4. The method of aspect 1, wherein a bit field comprising a sequence identifier (SID) is appended to each packet.

5. The method of aspect 4, wherein the identifying step comprises using a special value for a sequence identifier (SID).

6. The method of aspect 4, wherein the appended bit field comprises a dedicated CRC.

7. The method of aspect 1, wherein the at least one packet is not stored for retransmission.

8. The method of aspect 1, wherein the at least one packet is passed immediately to a high layer.

9. A packet retransmission module capable of transmitting or receiving a plurality of packets and capable of identifying at least one packet of the plurality of packets as a packet that should not be retransmitted.

10. The module of aspect 9, wherein the packet is any grouping of bytes.

11. The module of aspect 9, wherein the packet is one of an IP packet, an Ethernet packet, an ATM cell, a PTM packet, an ADSL Mux-Data Frame, a PTM-TC codeword, an RS codeword and a DMT symbol.

12. The module of aspect 9, wherein the module is capable of appending a bit field comprising a sequence identifier (SID) to each packet.

13. The module of aspect 12, wherein the identifying comprises using a special value for the SID.

14. The module of aspect 12, wherein the appended bit field comprises a dedicated CRC.

15. The module of aspect 9, wherein the at least one packet is not stored by the module for retransmission.

16. The module of aspect 9, wherein the at least one packet is passed by the module immediately to a high layer.

17. The module of aspect 9, wherein the module is implemented in one or more of a wireless transceiver, a wireless LAN station, a wired transceiver, a DSL modem, an ADSL modem, an xDSL modem, a VDSL modem, a multicarrier transceiver, a general purpose computer, a special purpose computer, a programmed microprocessor, a microcontroller and peripheral integrated circuit element(s), an ASIC, a digital signal processor, a hard-wired electronic or logic circuit and a programmable logic device.

18. The module of aspect 9, wherein the module is implemented in one or more of a PTM-TC, ATM-TC, PMD and PMS-TC.

19. A method comprising sharing memory between an interleaving and/or deinterleaving memory and a packet retransmission memory.

20. A method comprising allocating a first portion of shared memory for retransmission and a second portion of the shared memory for interleaving and/or deinterleaving.

21. The method of aspect 20, further comprising transmitting or receiving a message indicating how to allocate the shared memory.

22. The method of aspect 19 or 20, further comprising transmitting or receiving a message indicating how to share the memory.

23. A memory capable of being shared between an interleaving and/or deinterleaving buffer and a packet retransmission buffer.

24. A module capable of allocating a first portion of shared memory for retransmission and a second portion of the shared memory for interleaving and/or deinterleaving.

25. The module of aspect 24, wherein the module is capable of transmitting or receiving a message indicating how to allocate the shared memory.

26. The module of aspect 24, wherein the module is capable of transmitting or receiving a message indicating how to share the memory.

27. The module of aspect 24, wherein the module is one or more of a wireless transceiver, a wireless LAN station, a wired transceiver, a DSL modem, an ADSL modem, an xDSL modem, a VDSL modem, a multicarrier transceiver, a general purpose computer, a special purpose computer, a programmed microprocessor, a microcontroller and peripheral integrated circuit element(s), an ASIC, a digital signal processor, a hard-wired electronic or logic circuit and a programmable logic device.

28. A method of packet retransmission comprising:

transmitting or receiving a plurality of packets;
identifying at least one packet of the plurality of packets as a packet that should be retransmitted and at least one packet of the plurality of packets as a packet that should not be retransmitted.

29. The method of aspect 28, wherein the packet is any grouping of bytes.

30. The method of aspect 28, wherein the packet is one of an IP packet, an Ethernet packet, an ATM cell, a PTM packet, an ADSL Mux-Data Frame, a PTM-TC codeword, an RS codeword and a DMT symbol.

31. The method of aspect 28, wherein a bit field comprising a sequence identifier (SID) is appended to each packet.

32. The method of aspect 31, wherein the identifying step comprises using a special value for a sequence identifier (SID).

33. The method of aspect 31, wherein the appended bit field comprises a dedicated CRC.

34. The method of aspect 28, wherein at least one packet is stored for retransmission.

35. The method of aspect 28, wherein at least one packet is passed immediately to a high layer.

36. A packet handling method comprising:

receiving a stream of packets;
identifying a first number of packets in the stream of packets as low-latency packets;
identifying a second number of packets in the stream of packets as low-error packets;
forwarding the low-latency and low-error packets to a transceiver or a higher layer; and
storing the low-error packets for error correction.

37. The method of aspect 36, further comprising appending the low-error packets with an identifier.

38. A method of allocating memory in a transceiver comprising:

analyzing one or more communication parameters;
identifying a memory allocation; and
allocating memory based on the memory allocation to a retransmission function and one or more of interleaving, deinterleaving, RS coding and RS decoding.

39. A memory sharing method in a transceiver comprising:

receiving a memory allocation;
establishing a shared memory for one or more of interleaving, deinterleaving, RS coding, RS decoding and packet retransmission functions; and
sharing the shared memory between a retransmission function and one or more of interleaving, deinterleaving, RS coding and RS decoding functions.

40. The method of aspect 39, further comprising determining a compatibility of the memory allocation.

41. The method of aspect 39, wherein the compatibility of the memory allocation is based on channel performance metrics.

42. Means for performing the functionality of any of the aforementioned aspects.

43. An information storage media comprising information that when executed performs the functionality of any of the aforementioned aspects.

44. Any one or more of the features as substantially described herein.

45. Means for packet retransmission comprising:

means for transmitting or receiving a plurality of packets;
means for identifying at least one packet of the plurality of packets as a packet that should not be retransmitted.

46. The means of aspect 45, wherein the packet is any grouping of bytes.

47. The means of aspect 45, wherein the packet is one of an IP packet, an Ethernet packet, an ATM cell, a PTM packet, an ADSL Mux-Data Frame, a PTM-TC codeword, an RS codeword and a DMT symbol.

48. The means of aspect 45, wherein a bit field comprising a sequence identifier (SID) is appended to each packet.

49. The means of aspect 48, wherein the means for identifying comprises using a special value for a sequence identifier (SID).

50. The means of aspect 48, wherein the appended bit field comprises a dedicated CRC.

51. The means of aspect 45, wherein the at least one packet is not stored for retransmission.

52. The means of aspect 45, wherein the at least one packet is passed immediately to a high layer.

53. Means for sharing memory between an interleaving and/or deinterleaving function and a packet retransmission function.

54. Means for allocating a first portion of shared memory for retransmission and a second portion of the shared memory for interleaving and/or deinterleaving.

55. The means of aspect 54, further comprising means for transmitting or receiving a message indicating how to allocate the shared memory.

56. The means of aspect 54, further comprising means for transmitting or receiving a message indicating how to

share the memory.

57. Means for sharing a memory between an interleaving and/or deinterleaving function and a packet retransmission function.

58. Means for packet retransmission comprising:

means for transmitting or receiving a plurality of packets;
means for identifying at least one packet of the plurality of packets as a packet that should be retransmitted and at least one packet of the plurality of packets as a packet that should not be retransmitted.

59. The means of aspect 58, wherein the packet is any grouping of bytes.

60. The means of aspect 58, wherein the packet is one of an IP packet, an Ethernet packet, an ATM cell, a PTM packet, an ADSL Mux-Data Frame, a PTM-TC codeword, an RS codeword and a DMT symbol.

61. The means of aspect 58, wherein a bit field comprising a sequence identifier (SID) is appended to each packet.

62. The means of aspect 61, wherein the means for identifying comprises using a special value for the sequence identifier (SID).

63. The means of aspect 58, wherein the appended bit field comprises a dedicated CRC.

64. The means of aspect 58, wherein at least one packet is stored for retransmission.

65. The means of aspect 58, wherein at least one packet is passed immediately to a high layer.

66. A packet handling means comprising:

means for receiving a stream of packets;
means for identifying a first number of packets in the stream of packets as low-latency packets;
means for identifying a second number of packets in the stream of packets as low-error packets;
means for forwarding the low-latency and low-error packets to a transceiver or higher layer; and
means for storing the low-error packets for error correction.

67. The means of aspect 66, further comprising means for appending the low-error packets with an identifier.

68. Means for allocating memory in a transceiver comprising:

means for analyzing one or more communication parameters;
means for identifying a memory allocation; and
means for allocating memory based on the memory allocation to a retransmission function and one or more of an interleaving, deinterleaving, RS coding and RS decoding function.

69. Means for memory sharing in a transceiver comprising:

means for receiving a memory allocation;
means for establishing a shared memory for one or more of interleaving, deinterleaving, RS coding, RS decoding and packet retransmission function; and
means for sharing the shared memory between a retransmission function and one or more of interleaving, deinterleaving, RS coding and RS decoding functionality.

70. The means of aspect 69, further comprising means for determining a compatibility of the memory allocation.

71. The means of aspect 69, wherein the compatibility of the memory allocation is based on channel performance metrics.

72. A transceiver capable of performing packet retransmission comprising:

a transmission management module configurable to transmit or receive a plurality of packets; and
a QOS module configurable to identify at least one packet of the plurality of packets as a packet that should not be retransmitted.

73. The transceiver of aspect 72, wherein the packet is any grouping of bytes.

74. The transceiver of aspect 72, wherein the packet is one of an IP packet, an Ethernet packet, an ATM cell, a PTM packet, an ADSL Mux-Data Frame, a PTM-TC codeword, an RS codeword and a DMT symbol.

75. The transceiver of aspect 72, wherein a bit field comprising a sequence identifier (SID) is appended to each packet.

76. The transceiver of aspect 75, wherein the QOS module uses a special value for a sequence identifier (SID).

77. The transceiver of aspect 75, wherein the appended bit field comprises a dedicated CRC.

78. The transceiver of aspect 72, wherein the at least one packet is not stored for retransmission.

79. The transceiver of aspect 72, wherein the at least one packet is passed immediately to a high layer.

80. A memory capable of being shared between interleaving and/or deinterleaving and packet retransmission.

81. A memory management module capable of allocating a first portion of shared memory for retransmission and capable of allocating a second portion of the shared memory to one or more of interleaving and deinterleaving functionality.

82. The module of aspect 81, further comprising a module for transmitting or receiving a message indicating how to allocate the shared memory.

83. The module of aspect 81, further comprising a module for transmitting or receiving a message indicating how to share the memory.

84. A module capable of being shared between interleaving and/or deinterleaving and packet retransmission.

85. A transceiver capable of performing packet retransmission comprising:

a transmission management module configurable to transmit or receive a plurality of packets; and
a QOS module configurable to identify at least one packet of the plurality of packets as a packet that should be retransmitted and at least one packet of the plurality of packets as a packet that should not be retransmitted.

86. The transceiver of aspect 85, wherein the packet is any grouping of bytes.

87. The transceiver of aspect 85, wherein the packet is one of an IP packet, an Ethernet packet, an ATM cell, a PTM packet, an ADSL Mux-Data Frame, a PTM-TC codeword, an RS codeword and a DMT symbol.

88. The transceiver of aspect 85, wherein a bit field comprising a sequence identifier (SID) is appended to each packet.

89. The transceiver of aspect 88, wherein the identifying step comprises using a special value for a sequence identifier (SID).

90. The transceiver of aspect 88, wherein the appended bit field comprises a dedicated CRC.

91. The transceiver of aspect 85, wherein at least one packet is stored for retransmission.

92. The transceiver of aspect 85, wherein at least one packet is passed immediately to a high layer.

93. A transceiver capable of handling a stream of packets comprising:

a QOS module capable of identifying a first number of packets in the stream of packets as low-latency packets

and a second number of packets in the stream of packets as low-error packets;
a transmission management module capable of forwarding the low-latency and low-error packets to another transceiver; and
a buffer module capable of storing the low-error packets for error correction.

94. The transceiver of aspect 93, further comprising a packet QOS assignment module capable of appending the low-error packets with an identifier.

95. A transceiver capable of having an allocatable memory comprising:

a controller capable of analyzing one or more communication parameters; and
a memory management module capable of identifying a memory allocation and allocating a shared memory based on the memory allocation to a retransmission function and one or more of interleaving, deinterleaving, RS coding and RS decoding functions.

96. A transceiver capable of sharing memory comprising:

a controller capable of receiving a memory allocation; and
a memory management module capable of establishing a shared memory for a retransmission function and one or more of interleaving, deinterleaving, RS coding and RS decoding functions.

97. The transceiver aspect 96, wherein the memory management module further determines a compatibility of the memory allocation.

98. The transceiver of aspect 96, wherein the memory allocation is based on one or more communication channel performance metrics.

99. In a communication environment where packets are being transmitted, a method for allocating a first portion of shared memory for retransmission of packets and a second portion of the shared memory for interleaving and/or deinterleaving.

100. The method of aspect 99, wherein all errored packets are retransmitted.

101. The method of aspects 19, 20 and 99, wherein a retransmission function identifies packets that should not be retransmitted.

102. The method of aspect 99, wherein all packets are being transmitted without an assigned a QOS level.

103. A packet communication method comprising:

in a first mode of operation:

transmitting or receiving a plurality of packets;
identifying at least one packet of the plurality of packets as a packet that should not be retransmitted;

in a second mode of operation:

transmitting or receiving a plurality of packets;
allocating a first portion of shared memory for retransmission of packets and a second portion of the shared memory for one or more of interleaving, deinterleaving, coding, decoding and error correction; and

in a third mode of operation:

transmitting or receiving a plurality of packets;
identifying at least one packet of the plurality of packets as a retransmittable-type packet;
identifying at least one packet of the plurality of packets as a non-retransmittable-type packet;
allocating a first portion of shared memory for retransmission of the retransmittable-type packets and a second portion of the shared memory for one or more of interleaving, deinterleaving, coding, decoding and

error correction.

104. The method of aspect 103, wherein the retransmittable-type packet is a low-latency packet.

105. The method of aspect 103, wherein the retransmittable-type packet is a low-error packet.

[0021] These and other features and advantages of this invention are described in, or are apparent from, the following detailed description of the exemplary embodiments.

BRIEF DESCRIPTION OF THE DRAWINGS

[0022] The exemplary embodiments of the invention will be described in detail, with reference to the following figures wherein:

Fig. 1 illustrates an exemplary communication system according this invention.

Figure 2 is a flowchart outlining an exemplary method for packet retransmission according this invention.

Figure 3 is a flowchart outlining an exemplary method for retransmitted packet reception according this invention.

Figure 4 is a flowchart outlining an exemplary method for memory allocation according to this invention.

Figure 5 is a flowchart outlining an exemplary method for memory sharing according this invention.

DETAILED DESCRIPTION

[0023] The exemplary embodiments of this invention will be described in relation to packet retransmission and/or memory sharing in an xDSL environment. However, it should be appreciated, that in general, the systems and methods of this invention will work equally well for any type of communication system in any environment.

[0024] The exemplary systems and methods of this invention will also be described in relation to multicarrier modems, such as xDSL modems and VDSL modems, and associated communication hardware, software and communication channels. However, to avoid unnecessarily obscuring the present invention, the following description omits well-known structures and devices that may be shown in block diagram form or otherwise summarized.

[0025] For purposes of explanation, numerous details are set forth in order to provide a thorough understanding of the present invention. It should be appreciated however that the present invention may be practiced in a variety of ways beyond the specific details set forth herein.

[0026] Furthermore, while the exemplary embodiments illustrated herein show the various components of the system collocated, it is to be appreciated that the various components of the system can be located at distant portions of a distributed network, such as a communications network and/or the Internet, or within a dedicated secure, unsecured and/or encrypted system. Thus, it should be appreciated that the components of the system can be combined into one or more devices, such as a modem, or collocated on a particular node of a distributed network, such as a telecommunications network. As will be appreciated from the following description, and for reasons of computational efficiency, the components of the system can be arranged at any location within a distributed network without affecting the operation of the system. For example, the various components can be located in a Central Office modem (CO, ATU-C, VTU-O), a Customer Premises modem (CPE, ATU-R, VTU-R), an xDSL management device, or some combination thereof. Similarly, one or more functional portions of the system could be distributed between a modem and an associated computing device.

[0027] Furthermore, it should be appreciated that the various links, including communications channel 10, connecting the elements (not shown) can be wired or wireless links, or any combination thereof, or any other known or later developed element(s) that is capable of supplying and/or communicating data to and from the connected elements. The term module as used herein can refer to any known or later developed hardware, software, firmware, or combination thereof that is capable of performing the functionality associated with that element. The terms determine, calculate and compute, and variations thereof, as used herein are used interchangeably and include any type of methodology, process, mathematical operation or technique. Transmitting modem and Transmitting transceiver as well as Receiving modem and Receiving transceiver are used interchangeably herein.

[0028] Moreover, while some of the exemplary embodiments described herein are directed toward a transmitter portion of a transceiver performing interleaving and/or coding on transmitted information, it should be appreciated that a corresponding deinterleaving and/or decoding is performed by a receiving portion of a transceiver. Thus, while perhaps not

specifically illustrated in every example, this disclosure is intended to include this corresponding functionality in both the same transceiver and/or another transceiver.

[0029] Communication system 100 comprises a portion of a transceiver 200 and a portion of a transceiver 300. The transceiver 200, in addition to well known componentry, comprises an errored packet module 210, a transmission management module 220, a QOS ID module 225, a QOS module 230, a packet QOS assignment module 240, a retransmission buffer/interleaving/deinterleaving/RS coding/RS Decoding memory 250, a counter module 260, a memory management module 27D and a controller/memory 280.

[0030] Connected via communication channel 10 to transceiver 200 is transceiver 300. The transceiver 300, in addition to well known componentry, comprises an errored packet module 310, a transmission management module 320, a QOS ID module 325, a QOS module 330, a packet QOS assignment module 340, a retransmission buffer/interleaving/deinterleaving/RS coding/RS Decoding memory 350, a counter module 360, a memory management module 370 and a controller/memory 380.

[0031] As discussed above, the systems, methods and protocols discussed herein will be described in relation to xDSL systems, such as those specified in ADSL2 ITU-T G.993.2, ADSL2+ ITU G.993.5, and VDSL2 ITU G.993.2, which are incorporated herein by reference in their entirety.

[0032] In operation, a first aspect of the invention relates to retransmission of one or more packets, the retransmission identifier being implemented at any transmission layer where packet boundaries are defined. For example, it can be implemented in the Packet Transmission Mode TC (PTM-TC) of xDSL systems. For reference, "Annex A" which is of record in the identified provisional filing and incorporated by reference herein contains the PTM-TC of ADSL2 and VDSL2 systems as specified in the ITU-T G.992.3 ADSL2 standard.

[0033] As discussed herein, the invention will generally be described in relation to the retransmission mechanism being incorporated as part of the PTM-TC however, it should be appreciated that it can also be implemented inside other layer(s) of a communication device, such as an xDSL transceiver, such as within the PMD or PMS-TC.

[0034] The retransmission techniques disclosed herein can also be performed at a layer above the PTM-TC, for example, in a new layer between the PTM-TC and the next higher layer, or at any layer above the physical layer, e.g., layers 2, 3, 4, 5, etc.

[0035] Additionally, while "packet" is used herein, the term "packet" includes any basic data unit, i.e., a grouping of bytes. For example, a packet could be an IP packet, an Ethernet packet, an ATM cell, a PTM packet, an ADSL Mux-Data frame, a PTM-TC codeword, an RS Codeword, a DMT symbol, or, in general, any grouping of data bytes or information. A packet could also be a combination of one or more of the above. For example, a packet could be constructed by concatenating any number of ATM cells to create a larger grouping of bits. For example, five 53-byte ATM cells could be combined into a 265 byte packet or four 65 PTM-TC codewords could be combined into a 260 byte packet. A packet could also be based on dividing any of the above groupings of bytes. For example, larger IP or Ethernet packets could be divided into smaller groups of bytes to be used as a "packet" with the retransmission functionality described herein. For example, a 150 byte IP packet could be divided into three 500 byte packets and used by the retransmission protocol. If the retransmission function is implemented as part of the PTM-TC, packets are received from a higher-layer in the xDSL transmitter PTM-TC and sent via the xDSL transmitter PMS-TC and PMD over the communication channel to the xDSL receiver. The xDSL receiver PMD and PMS-TC process the received signal and pass the results to the PTM-TC, which processes the information and passes the received packet up to a higher layer(s).

[0036] Packets received from the higher layer at the xDSL transmitter PTM-TC can be designated to have a QOS level. The QOS level of a packet can indicate the importance of certain service metrics (or characteristics) of this (or more) packet(s). Two exemplary QOS metrics are delay (or latency) and PER. Although, as discussed above, these two characteristics are the focus of the invention, any number of different QOS metrics could also be used.

[0037] As an example, in the case where the 2 QOS metrics are latency and PER, a first set of packets carrying certain information may have a requirement for very low PER but may be able to tolerate higher delay. Other packets containing information such as voice or data traffic may have very low delay requirements but can tolerate a higher PER. According to an exemplary embodiment of this invention, the first set of packets would be designated as "low-PER" QOS packets whereas voice or data packets would be designated at "low-latency" QOS packets. The QOS level (or metric) of a packet could be designated in a number of ways. For example:

i) Certain bit fields in the header of data portions of each packet could contain certain values that specify the QOS requirements a packet. For example, the packet header could contain bit fields that indicate if the packet has a "low-PER" QOS requirement or a "low-latency" QOS requirement. These fields could be read by the transmitting modem and/or receiving modem to determine the QOS level of each packet.

ii) When sending packets from higher layer to the PTM-TC, the higher layer could indicate on a packet by packet basis the QOS requirements of each packet. For example, there could be a separate signal on the interface that indicates if a packet being transferred has a "low-PER" QOS requirement or a "low-latency" QOS requirement.

iii) When sending packets from higher layer to the PTM-TC, there could be a separate interface (or channel) for

packets with different QOS requirements. For example, one channel could be used to transfer packets that have a "low-PER" QOS requirement and a second channel could used to transfer packets that have a "low-latency" QOS requirement. This general concept could also be scaled to accommodate a plurality of different QOS requirements and a plurality of channels.

iv) As in the case of Pre-Emption in the PTM-TC (see Annex A), two logically separated γ-interfaces could be used for the transport of a low-PER and low-latency packet flow through a single bearer channel. This general idea could then be scaled to support any number of packet types.

[0038] Other mechanisms can also be used to designate the QOS level of a packet - provided the transmitter and/or receiver retransmission protocol is capable of knowing the QOS level for one or more packets.

[0039] Once the QOS level is known by the PTM-TCs, an efficient packet retransmission can be designed. The exemplary packet retransmission methods and protocols can be designed to include any one or more of the following system level characteristics:

- All packets are received from the higher layer and passed to the higher layers in the correct order.
- "Low-latency" QOS packets will not incur any extra delay due to retransmission.
- Only packets with "low-PER" QOS should be retransmitted, and therefore only low-PER packets will incur the extra delay due to the retransmission mechanism.
- Flow control can be minimized such that the transmitter can generally accept all packets from the higher layer at the required data rate without holding-off (or "blocking") packets from the higher layer during the retransmission process.
- Packet delay-variation/jitter can be minimal.
- A "DRR-like" functionality in a single bearer without requiring latency/interleaver OLR.

[0040] The transceiver 200, in cooperation with the QOS module 230, receives packets from a higher-layer. In cooperation with the packet QOS assignment module 240, a packet Sequence ID (SID) is appended to the received packets. The packets, in cooperation with the transmission management module 220, can then be transmitted in the order in which they were received.

[0041] The QOS Module 230, if not already performed by a high layer, also identifies packets based on the QOS requirement of the packet(s). Then, in cooperation with the packet QOS assignment module 240, a QOS identifier is associated with the packet as discussed hereinafter.

[0042] If, for example, the packet is identified as a low-PER packet, and assigned such an identifier by the QOS module 230, when the transmission management module 220 receives the packet, the packet is identified by the QOS ID module 225 as being a low-PER packet and the packet is forwarded for storage in the retransmission buffer 250. Alternatively, if the packet has been labeled as a low-latency packet, and identified as such by the by the QOS ID module 225, the packet can be transmitted to the receiving modem in cooperation with the transmission management module 220.

[0043] The low-PER packets can be stored for a sufficient amount of time to wait for a retransmission message from the receiver PTM-TC. During this time, the transmitting modem can continue to receive packets from one or more higher layers, label these packets, if needed, and store these packets, if they are identified as low-PER packets, in the same way. The resulting minimum storage requirements for the transmitter PTM-TC are estimated below.

[0044] For successful retransmission, the receiving modem should be able to inform the transmitting modem which packet, or packets, need to be retransmitted. One exemplary way of performing this is by transmitting packets with an appended bit field that contains a counter indicating the place of each packet in a stream of packets. This counter value is also known as a Sequence ID (SID). For example, a bit field containing a 16-bit counter could be appended to each packet and the counter module 260 would be incremented by one after each packet was transmitted. In cooperation with the packet assignment module 240, a packet counter field could be appended to the packet in a number of places, for example, at the beginning or end of the packet, or at the beginning or end of the packet header.

[0045] Packets received from a higher-layer may already have information in a header or data field of the packet that contains the packet count, or sequence, information. In addition, the packet counter field may be appended with an additional CRC field that contains a cyclic redundancy check that is computed on the packet counter field bits only. This CRC can be used by the receiver to determine if the packet counter field is received correctly, i.e., without bit errors. This CRC can be in addition to the standard CRC inserted by the standard PTM-TC (the standard packet PTM-TC CRC is a CRC that covers all bits in a packet). The standard packet CRC may also cover the new packet counter field in its CRC as well. This helps if the receiving modem uses the presence or absence of the packet counter field in a packet to detect if the packet has a low-PER or low-latency requirement (discussed below).

[0046] Alternatively, or in addition, the packet counter field (with or without a dedicated CRC) can be appended only to the packets with a specific QOS requirement, whereas all other packets can be transmitted without modification. For example, all video packets with low-PER QOS could contain the appended packet counter field whereas all the voice/data

low-latency packets could be transmitted unchanged. One exemplary benefit of this is that the overhead (rate loss) due to adding the packet counter field is incurred only when transmitting low-PER packets.

[0047] Alternatively, or in addition, all low-PER and low-latency packets can be transmitted with the low packet counter field (with or without a dedicated CRC). In this case, the packet counter field of the low-latency packets may contain a special value indicating that a packet is not a low-PER packet. Also, the packet counter field of the low-latency packet may not even contain a count value, since the low-latency packets are not intended to be retransmitted. In this case, the packet counter field could contain a counter value only for low-PER packets and the counter value would only be incremented when a low-PER packet was transmitted. As an example, if the packet counter field is 16 bits, the special value of all zeros could be used to indicate that a packet is a low-latency packet. In this case, low-PER packets could contain counter values from one up to 2^{16}-1, but not including all zeros, since this special zero value can be used to indicate a low-latency packet.

[0048] The receiving modem, e.g., receiver PTM-TC, which in this case is illustrated as the transceiver 300 and includes comparable functionality to that described in relation to transceiver 200, receives packets from the transmitting modem via the PMS-TC. If the received packet is identified as a low-latency packet by the QOS ID module 325, the packet is passed to a higher-layer. If a received packet is identified by the QOS ID module 325 as a low-PER packet, the packet is forwarded, with the cooperation of the transmission management module 320, to the retransmission buffer 350 for a minimum amount of time before passing to a higher-layer.

[0049] The storage time in the retransmission buffer 350 helps ensure that the retransmission protocol provides a constant delay, e.g., no delay variation seen by the upper layers. This way, if a packet needs to be retransmitted, the receiving modem can continue to provide packets to the higher-layers at a constant rate while waiting for the retransmitted packet(s) to arrive from the transmitting modem. The resulting minimum memory (or storage) requirements for the receiving PTM-TC are estimated below.

[0050] Alternatively, low-PER packets without errors may not be stored for a minimum amount of time before passing to a higher-layer. The error-free low-PER packets can be passed to the higher-layer immediately just like the low-latency packets. However, when a low-PER packet is in error, it is stored along with all of the following low-PER packets before passing to a higher-layer in order to wait for the retransmitted packet(s) to arrive. This will cause a delay variation on the low-PER packets whenever a retransmission occurs. However, this delay variation would not apply to the low-latency packets.

[0051] The QOS ID module 325 can detect that a packet is either low-PER or low-latency using several different methods. For example, if all low-PER and low-latency packets contain the appended packet counter field, then the receiving modem, in cooperation with the counter module 360, detects a low-latency packet when a packet counter field contains the designated special value, which was inserted by the transmitting modem, indicating the packet is a low-latency packet.

[0052] Alternatively, or in addition, the receiver could detect a low-PER packet when the packet counter field contains a valid packet counter value. Additionally, if a dedicated CRC is appended to the packet counter field, the CRC could be used to detect if the packet counter field bits are in error.

[0053] If the packet counter field, including the CRC, is only appended to low-PER packets, the absence or presence of this field in a packet can be used by the receiving modem, and in particular the QOS ID module, to detect a low-delay packet. For example, the receiving modem can examine the position in the packet where the packet counter field would be, if it was a low-PER packet, and if the packet counter field CRC fails while the standard whole packet CRC is correct, the receiving modem could determine that the packet is a low-delay packet, since it does not contain the packet counter field. Likewise, for example, the receiving modem can examine the position in the packet were the packet counter field would be, if it was a low-PER packet, and if the packet counter field CRC is correct, the receiving modem would determine that the packet is a low-PER packet, regardless of the status of the standard whole packet CRC.

[0054] The receiving modem, in cooperation with the retransmission buffer 350, and the errored packet module 310, can be used to detect missing or errored packets in a number of exemplary ways. For example, the errored packet module 310 can detect bit errors in the packet using the standard/whole packet PTM-TC CRC. Alternatively, or in addition, the errored packet module 310 can detect bit errors in the packet counter field if the transmitting modem appended a dedicated CRC to the packet counter field. This CRC is valuable because it can be used by the errored packet module in the receiving modem to determine if a packet has the correct packet number, even if the standard whole packet CRC happens to be in error.

[0055] Alternatively, or in addition, the errored packet module 310, can detect an errored or missing packet by receiving a packet with a correct CRC, either in the standard or packet counter field, which contains a packet counter number that is not the expected packet counter number. For example, if the errored packet module 310, in cooperation with the counter module 360, detects the receipt of a packet with a counter number equal to 5, wherein the errored packet module 310 is expecting to receive a packet with a counter equal to 3, the errored packet module 310 can determine that two packets, namely packets numbered 3 and 4, were lost due to errors.

[0056] Once a packet(s) is found to be in error, there are several exemplary ways in which a receiving modem can

communicate information to the transmitting modem indicating that a retransmission of one or more packets is required. For example, the receiving modem, in cooperation with the errored packet module 310, can send an acknowledgment (ACK) message to the transmitting modem for every correctly received message or every predetermined number of packets. As long as the transmitting modem, and in particular the errored packet module 210, receives messages acknowledging receipt of packets in sequential order, there is no need for retransmission of information to the receiving modem. However, if the transmitting modem, and in particular the errored packet module 210, receives a message from the receiving modem, and in particular the errored packet module 310, indicating that a packet was correctly received with a counter value that is out of order, a retransmission by the transmitting modem is required. In the above example, where the receiving modem received a packet with a counter value equal to 5, without receiving packets numbered 3 and 4, the transmitting modem could receive an ACK for the packet with counter value of 2 and then an ACK for the packet with a counter value of 5. The transmitting modem would then determine that it was necessary to retransmit packets with counter values of 3 and 4 since they were not received.

[0057] Alternatively, or in addition, a timeout value could be specified for the transmitting modem. This timeout value could correspond to the amount of time that the transmitting modem should wait for an ACK for particular packet before retransmitting the packet. The timeout value could be set to be at least as long as the round-trip delay required for the transmitting modem to send a packet to the receiving modem and for the receiving modem to send an ACK back to the transmitting modem. If an ACK is not received by the timeout value, the transmitting modem could retransmit the packet.

[0058] Alternatively, or in addition, a negative acknowledgment (NAK) could be sent to the transmitting modem when a packet is detected as errored or missing. In the above example, when the receiving modem received the packet with a counter value of 5, while expecting a counter value of 3, the receiving modem could send a NAK message to the transmitting modem indicating that packets with counter values of 3 and 4 were not correctly received and needed to be retransmitted.

[0059] Alternatively, or in addition, if a packet was received with a correct packet counter CRC and a valid packet counter value *a* and an incorrect standard whole packet CRC, the receiving modem could send a NAK message to the transmitting modem indicating that a packet with a value of *a* was incorrectly received and needed to be retransmitted.

[0060] Assuming that errored packets are infrequent, any methodology that sends an ACK for each correctly received packet can require a larger amount of data rate in the message channel that communicates this information back to the transmitting modem. In this case, sending only NAKs has the benefit that it requires sending a message only when an errored or missing packet is detected. Depending on the data rate capabilities of the message channel, and the PER, a retransmission system may use only ACKs, only NAKs, or both ACKs and NAKs at the same time.

[0061] The ACK and NAK messages sent back to the transmitting modem can be transmitted over the same physical channel i.e., phone line, in the opposite direction as the received packets. Since the channel has a limited data rate and is not necessarily error-free, it is important to make sure that these messages are as robust as possible and consume the least amount of data rate. Additionally, since the transmit and receive retransmission memory requirements depend on the round-trip latency of the connection, is important to minimize latency requirements for the message channel. There are several ways these requirements can be addressed.

[0062] The messages can be sent over a separate "low-latency" or "fast" path between the xDSL transceivers. This fast path could include little or even no delay due to interleaving and can be specified to have a latency that is less than 2ms.

[0063] Alternatively, or in addition, the messages can be sent with increasing robustness by repeating transmission of each message a number of times. For example, the message could be repeated x times in order to make sure that even if x-1 messages were corrupted by the channel, at least one message would be received correctly.

[0064] Alternatively, or in addition, the messages can be sent such that each message is repeated a number of times and each repeated message is sent in a different DMT symbol. For example, the message can be repeated x times and each message sent in one of x DMT symbols. This way, even if x-1 DMT symbols were corrupted by the channel, at least one message would be received correctly.

[0065] Alternatively, or in addition, the messages can be sent such that each message is repeated a number of times and each repeated message is sent in different DMT symbols. For example, the message could be repeated x times and each message sent in one of x DMT symbols. This way, even if x-1 DMT symbols were corrupted by the channel, at least one message would be received correctly.

[0066] Alternatively, or in addition, the messages can be sent such that each message is repeated a number of times and each repeated message is sent a plurality of times in each DMT symbol. For example, the message could be repeated x times and each repeated message sent y times in one of x DMT symbols. This way, even if x-1 DMT symbols were corrupted by the channel and/or large portions of a DMT symbol were corrupted by a channel, the least one message would be received correctly.

[0067] Alternatively, or in addition, the messages can include multiple packet count values in order to reduce the data rate requirements. For example, if packets with counter values of 3 - 9 are correctly (or incorrectly) received an ACK (or NAK) message would be sent to indicate these packet values. For example, the message could contain the values 3 and 9 and the receiver of the message would automatically know that all intermediate values (4, 5, 6, 7, 8) are also been

indicated in the message.

[0068] Alternatively, or in addition, the DMT sub-carriers that modulate these messages could operate with a much higher SNR margin e.g., 15dB, as compared to the normal 6dB margin of xDSL systems. This way, the messages would have a higher immunity to channel noise.

[0069] Alternatively, or in addition, a receiving modem may need to send an additional ACK or NAK message after already in the process of sending a repeated message. For example, a receiving modem may detect that packets with values 3 to 9 have been correctly received and send an ACK message back to the transmitting modem indicating this information. This message can be repeated x times with each repeated message being transmitted (at least once) on different DMT symbols. While sending the second repeated message on the second DMT symbol, the receiver could detect that packets with values 10 to 17 have now also been correctly received. In this case, the receiving modem could just append this information to the previous message or, alternatively, send a new separate message that is repeated as well x times with each repeated message being transmitted (at least once) on a different DMT symbol.

[0070] Alternatively, or in addition, when repeating a message x times on x DMT symbols, each repeated message can be modulated on a different set of DMT sub-carriers on each DMT symbol. This way, if one or more sub-carriers have a low SNR, the message will still be correctly received.

[0071] For low-PER packets, the delay due to this retransmission protocol is equal to the delay that results from storing these packets at the receiving modem (RX PTM-TC) to pass in the packets to a higher layer. Low-latency packets do not incur extra delay.

[0072] The transmitting modem must store a packet for retransmission for a time equal to the round trip delay from when the packet is sent to when the retransmission message is received. During this time the transmitting modem continues to receive packets from the higher layer and continues to store these packets in the same way. Therefore the storage requirements in octets can be computed as:

$$Minimum\ TX\ memory\ (octets) = roundtripdelay * datarate,$$

where the *roundtripdelay* is the time equal to the round trip delay from when the packet is sent to when the retransmission message is received, and the *datarate* is the data rate of the connection that is transferring the packets.

[0073] For ITU-T G.993.2 VDSL2, which is incorporated herein by reference, this can be computed using the VDSL2 profile parameters as:

$$Minimum\ TX\ memory\ (octets) = (DS + US\ Interleaving\ Delay\ in\ octets) + (US+DS\ alpha/beta\ delay\ without\ interleaving) * (Bidirectional\ Net\ data\ rate) = MAXDLEYOCTET + (4\ ms) * MBDC,$$

where *MAXDELAYOCTET* and *MBDC* are as specified in the VDSL2 profiles.

[0074] For the receiver, the minimum receiver storage requirements can be determined in a similar manner. More specifically, the RX PTM-TC must store a packet before passing it to the higher layer for a time equal to the round trip delay from when a retransmission message is transmitted to when the retransmitted packet is received. This is equal to storage requirements in octets (same as transmitter):

$$Minimum\ RX\ memory\ (octets) = roundtripdelay * datarate,$$

where the *roundtripdelay* is the time equal to the round trip from when a retransmission message is transmitted to when the retransmitted packet is received and the *datarate* is the data rate of the connection that is transferring the packets.

[0075] For ITU-T G.993.2 VDSL2 this can be computed using the VDSL2 profile parameters as:

$$\textit{Minimum RX memory (octets)} = \textit{(DS + US Interleaving Delay in octets) + (US+DS alpha/beta delay without interleaving)*(Bidirectional Net data rate)} = \textit{MAXDLEYOCTET + (4 ms)*MBDC,}$$

where MAXDELAYOCTET and MBDC are as specified in the ITU-T G.993.2 VDSL2 profiles.

Table 1: Minimum TX or RX memory requirements for VDSL2

VDSL2 PROFILE	8a,8b,8c,8d	12a,12b	17a	30a
TX or RX memory requirements (octets) = MAXDLEYOCTET +.002MBDC	90,536	99,536	123,304	231,072

The estimates in Table 1 assume that all the entire *MAXDELAYOCTET* and *MBDC* are used for the transfer of the packet stream, i.e., the reverse channel has a very low data rate and no interleaving.

[0076] Some xDSL standards specify minimum storage, i.e., memory, requirements for interleaving of RS codewords. Interleaving with RS coding is an effective way of correcting channel errors due to, for example, impulse noise. For example, VDSL2 requires support of an aggregate bidirectional interleaver and de-interleaver memory of 65Kbytes for the 8a VDSL2 profile. This corresponds to storage requirement of approximately 32Kbytes in a single transceiver.

Sharing of Memory between the Retransmission Function and one or more of the Interleaving/Deinterleaving/RS Coding/RS Decoding Functions

[0077] From Table 1, it is apparent that the memory requirements to support the retransmission protocol may be more than double the storage requirements of a single transceiver. Additionally, the retransmission protocol provides a different method for correcting channel errors due to, for example, impulse noise.

[0078] Moreover, interleaving and RS coding methods and retransmission protocols provide different advantages with respect to error correction capabilities, latency, buffering requirements, and the like. For example, under certain configuration and noise conditions the interleaving/RS coding provides error correction/coding gain with less delay and overhead than the retransmission protocol (for packets that can be retransmitted). While under other conditions the retransmission protocol will provide better error correction with less delay and overhead than the interleaving/RS coding.

[0079] In some cases, a first portion of the memory can be used for one function and a second portion of the memory for some other function. For example, if the configuration and noise conditions are such that the interleaving/RS coding would not provide good error correction/coding gain, then all the available memory could be used for the retransmission function and none allocated to the interleaving/deinterleaving/RS coding/RS decoding functionality, e.g., the interleaving/deinterleaving could be disabled.

[0080] Likewise, if the configuration and noise conditions are such that the retransmission protocol would not provide good error correction/coding gain, then all the available memory could be used for the interleaving/deinterleaving/RS coding/RS decoding functionality and no memory would be used for the retransmission function, e.g., the retransmission function would be disabled.

[0081] Alternatively, or addition, both methods could be used because both have their advantages, with the system, e.g., the memory management module 370, being able to dynamically allocate a first portion of the memory 250/350 to the interleaving/deinterleaving/RS coding/RS decoding functionality and a second portion of the memory to the retransmission functionality. For example, 40% of the memory could be allocated to the interleaving/deinterleaving/RS coding/RS decoding functionality with the remaining 60% allocated to the retransmission of functionality. However, it should be appreciated, that in general, the memory can be divided, i.e., shared, in any manner.

[0082] The sharing of memory between the retransmission function and the interleaving/deinterleaving/RS coding/RS decoding functions is not restricted to retransmission protocols described in other embodiments that utilize QOS metrics to determine which packets should be retransmitted. In other words, the sharing of memory between the retransmission function and the interleaving/deinterleaving/RS coding/RS decoding functions can be utilized for retransmission systems where all errored packets are retransmitted, i.e., there is no QOS identifier in the retransmission protocol. For example, the FEC/interleaving could be used to meet the INPmin requirement specifically targeting the impulse noise that occurs frequently (e.g., on the order of minutes or seconds) but is short in duration and can therefore be corrected by the FEC/interleaving. For example, the retransmission protocol can be used to correct infrequent errors (on the order of

hours) that are long in duration and would not be correctable by the FEC/interleaving. As another example, the FEC/interleaving function may be used in combination with the retransmission function because it is well known that FEC with minimal interleaving provides a 1 dB to 3 dB coding gain when used with a trellis code (as is often the case in xDSL systems). This means that even when the majority of the shared memory is allocated to a retransmission function to address channel noise (such as impulse noise), a smaller amount of memory may be allocated to the FEC/interleaving function for the coding gain advantage.

[0083] Associated with the ability to allocate or partition memory between one or more of the interleaving/deinterleaving/RS coding/RS decoding functionality and retransmission functionality, is the ability to exchange information between transceivers on how to establish this allocation. For example, the transmitting modem may send a message to the receiving modem indicating how much of the available memory is to be allocated to one or more of the interleaving/deinterleaving/RS coding/RS decoding functionality and how much memory is to be allocated to the retransmission functionality. For example, if the receiving modem contains 100kBytes of available memory, the transmitting modem could send a message to the receiving modem indicating that 25kBytes should be allocated to RS coding functionality and 75kBytes should be allocated to the retransmission functionality. Since the receiving modem generally determines the interleaving/RS coding parameters that are used, the receiving modem could use this information to select parameters, e.g., interleaver depth and codeword size, that would result in an interleaving memory requirement that is no more than the amount indicated in the message.

[0084] Alternatively, or addition, the receiving modem can send a message to the transmitting modem indicating how much of the available memory is to be allocated to one or more of the interleaving/deinterleaving/RS coding/RS decoding functionality, and how much memory should be allocated to the retransmission functionality.

Sharing of memory between a Retransmission Function with Identification of Low-PER and/or Low-Latency Packets and one or more of interleaving/deinterleaving/RS Coding/ RS Decoding functions.

[0085] A way of reducing the total memory requirement of a transceiver that supports the retransmission functionality with the identification of the low-PER and/or the low-latency packets is to define a limit, such as a maximum value, for the data rate of the low-PER packet stream, i.e., the packets requiring retransmission to meet a specific PER requirement. For example, if the total date rate is 50 Mbps, and the roundtrip delay is 10 ms, the minimum TX or RX memory requirement is 50,000,000*.01/8=62500 bytes if the retransmission function must support the case where all the transmitted packet (all 50 Mbps) are low-PER packets. If however, only a portion of the 50 Mbps data rate is allocated to the low-PER packet stream (e.g. 30 Mbps), whereas the remainder of the data rate is allocated to the low-latency packet stream (e.g. 20 Mbps), the minimum TX or RX memory requirement would be 30,000,000*.01/8=37500 bytes (assuming a roundtrip delay of 10ms). In this case, the transmitting modem (or receiving modem) may send a message to the receiving modem (or transmitting modem) that indicates the maximum data rate of the packet traffic that will be used in the retransmission function. Using the example above, the transmitting modem (or receiving modem) would send a message indicating that the low-PER traffic will not exceed 30Mbps, in which case the receiving modem (or transmitting modem) will allocate memory to the retransmission functionality and the interleaving/RS coding (or deinterleaving/RS decoding) functionality accordingly.

[0086] One exemplary advantage of indicating the low-PER and low-latency packets as part of the retransmission protocol is that it provides a DDR-like functionality without the overhead of dynamically re-allocating latency paths. For example, when a video application is turned off (less low-PER packets on the connection), the data application data rate can be increased (more low-latency packets on the connection) without any changes in the transmission parameters.

[0087] The retransmission protocol can also be used with or without underlying FEC/interleaving (or deinterleaving). An exemplary approach is to use the FEC/interleaving to meet the INPmin requirement specifically targeting the impulse noise that occurs frequently, e.g., on the order of minutes or seconds. The retransmission protocol can be used to correct infrequent errors (on the order of hours) that will only typically be a problem for very-low PER applications, such as video.

[0088] When a retransmission protocol is combined with underlying FEC/interleaving (or deinterleaving), the retransmission protocol latency will grow in proportion to the additional FEC/interleaving delay. This is due to the fact that the required receiver buffering corresponds approximately to the round-trip delay time of packet transmission and message acknowledgment.

[0089] As an example of utilizing the retransmission protocol that identifies one or more of low-PER and low-latency packets with underlying FEC/Interleaving (or deinterleaving), the FEC/interleaving is used to achieve the INPmin requirements within the latency constraint and the retransmission function is used to provide another layer of error correction. The low-PER packets are passed through both the retransmission function and the FEC/interleaver and, as a result, a very low PER is achieved. The low-latency packets are passed through the FEC/Interleaver but not passed through the retransmission function. Since low-latency packets are passed through the FEC/interleaver, they will meet the INPmin and MaxDelay requirements without incurring the extra delay from the retransmission protocol.

[0090] Example configuration parameters:

DS Data rate = 25 Mbps, INPmin=2, MaxDelayDS= 8ms

[0091] Example FEC/Interleaving parameters:

NFEC=128, R=16 which results in an interleaver memory of approximately 14Kbytes for INP=2 with 8 ms of delay.

[0092] Retransmission protocol:

If we assume the US latency is 2ms, the retransmission protocol will add a minimum of 8+2 = 10ms of latency. This means that the total DS latency (FEC/interleaving+ Retransmission) will be approximately 8+10=18ms.

[0093] Memory requirements:

The memory requirements for the retransmission protocol can be calculated as: (10ms) x (25 Mbps) /8 = 31Kbytes. Therefore the transmitter and receiver will both need a total memory of (31+14) =45 Kbytes for the retransmission protocol and FEC/Interleaving function.

[0094] Low-PER packets:

Latency=18ms. The PER is very low because INPmin=2 (from FEC/interleaving) is combined with the error correction of the retransmission function.

[0095] Low-Latency packets:

Latency = 8ms. INP =2 from FEC/interleaving. No additional delay due to retransmission function.

[0096] Although this invention describes the retransmission being done as part of the PTM-TC, it could also be done inside other layer(s) of the xDSL transceiver, such as the PMD or the PMS-TC. Alternatively, it could performed at a layer(s) above the PTM-TC, for example, in a new layer between the PTM-TC and the next higher layer, or in general any layer above the physical layer, e.g., layer 1, 2, 3, 4 or 5.

[0097] In this invention, the term "transmitter" generally refers to the transceiver that transmits the packets. Likewise the term "receiver" generally refers to the transceiver that receives the packets. Therefore the "transmitter" also receives the ACK/NAK messages and the "receiver" also transmits the ACK/NAK messages.

[0098] Figure 2 outlines an exemplary method of operation of a transmitting modem utilizing the retransmission protocol. In particular, control begins in step S100 and continues to step S110. In step S110, a packet is received from a higher layer. Then, in step S120, a decision is made as to whether the received packet is a retransmitted type packet. If the packet is not a retransmitted type packet, such as a low-latency packet, control jumps to step S125 where the packet is optionally updated (as discussed above) with control continuing to step S130 where the packet is forwarded to the receiver. Control then continues to step S140 where the control sequence ends.

[0099] If the packet is a retransmitted type packet, such as a low-PER packet, control continues to step S150. In step S150, the packet can be updated with information such as a sequence identifier or other information that allows a receiver to be able to determine which packet (or packets) need to be retransmitted. Next, in step S160, the updated packet is stored in the retransmission buffer. Then, in step S170, the packet is forwarded to the receiver. Control then continues to step S180.

[0100] In step S180, a determination is made whether the packet needs to be retransmitted. If the packet needs to be retransmitted, control jumps back to step S170. Otherwise, control continues to step S190.

[0101] In step S190, the packet is deleted from the retransmission buffer. Control then continues to step S140 were the control sequence ends.

[0102] Figure 3 outlines an exemplary method of operation of a receiving modem utilizing the retransmission protocol. In particular, control begins in step S200 and continues to step S210. In step S210, a packet is received from the transmitter. Next, in step S220, a determination is made whether the packet has been identified as a retransmitted type packet. If the packet has not been identified as a retransmittable type packet, control jumps to step S230.

[0103] In step S230, the packet is forwarded to a higher layer. Control then continues to step S240 where the control sequence ends.

[0104] Alternatively, if the received packet is a retransmittable type packet, the packet is stored in the retransmission buffer in step S260. Next, in step S270, the integrity of the packet can be checked, for example utilizing a CRC. Then, in step S280, a determination is made whether the packet needs retransmission. If the packet needs retransmission, control continues to step S290 where the retransmitted packet is obtained, for example, based on the sending of a

message(s), one or the other transceiver determining a packet is missing, or the like, as discussed above, with control continuing back to step S270 for an integrity check.

[0105] If the packet does not need retransmission, control continues to step S295 where the packet is forwarded to a higher layer and deleted from the retransmission buffer. Control then continues to step S240 where the control sequence ends.

[0106] Figure 4 outlines an exemplary memory allocation method for sharing memory between the retransmission function and one or more of the interleaving/deinterleaving functionality and coding functionality. In particular, control begins in step S300 and continues to step S305. In step S305, a message is sent/received specifying the available memory. Typically, the receiver will send a message to the transmitter specifying the available memory, but the transmitter could also send a message to the receiver. Next, in step S310, a determination is made as to how the memory should be allocated. As discussed, this allocation can be based on one or more of error correction capability, latency, buffering requirements, SNR, impulse noise, or in general, any communication parameter. Next, in step S320, the memory allocation is communicated to another transceiver. Then, in step S330, a determination can made as to whether the allocation is compatible. If the received allocation is not compatible, control continues to step S360 wherein another allocation can be requested, with control continuing back to step S320.

[0107] Alternatively, if the allocation is compatible, in step S340 the memory is allocated based on the received allocation. Control then continues to step S350 where the control sequence ends.

[0108] Figure 5 illustrates an exemplary memory sharing methodology for use with a retransmission function and one or more of interleaving/deinterleaving functionality, RS coding/decoding functionality. In particular, control begins in step S400 and continues to step S410. In step S410, the memory allocation is received from, for example, a memory management module that may be located in the same transceiver, or at a remote transceiver. Next, in step S420, the memory sharing configuration is established and then, in step S430, the memory is shared between a retransmission function and one or more of the interleaving/deinterleaving functionality, RS coding/decoding functionality. Control then continues to step S440.

[0109] In step S440, a determination is made whether the memory sharing configuration should be changed. For example, the memory sharing configuration can be dynamically changed based on changes in the communication channel or data type(s) being sent on the communication channel. More specifically, for example, if the communications channel was not performing well, e.g., an increase in bit errors, it may be advantageous to increase the retransmission capability while decreasing the FEC/interleaving capability or vise-versa, which could have an impact on how the memory sharing should be configured.

[0110] If the memory sharing configuration should be changed, control continues to step S450 where another allocation can be requested, with control continuing back to step S410. Otherwise, control continues to step S460 where the control sequence ends.

[0111] While the above-described flowcharts have been discussed in relation to a particular sequence of events, it should be appreciated that changes to this sequence can occur without materially effecting the operation of the invention. Additionally, the exact sequence of events need not occur as set forth in the exemplary embodiments, but rather the steps can be performed by one or the other transceiver in the communication system provided both transceivers are aware of the technique being used for initialization. Additionally, the exemplary techniques illustrated herein are not limited to the specifically illustrated embodiments but can also be utilized with the other exemplary embodiments and each described feature is individually and separately claimable.

[0112] The above-described system can be implemented on wired and/or wireless telecommunications devices, such a modem, a multicarrier modem, a DSL modem, an ADSL modem, an xDSL modem, a VDSL modem, a linecard, test equipment, a multicarrier transceiver, a wired and/or wireless wide/local area network system, a satellite communication system, network-based communication systems, such as an IP, Ethernet or ATM system, a modem equipped with diagnostic capabilities, or the like, or on a separate programmed general purpose computer having a communications device or in conjunction with any of the following communications protocols: CDSL, ADSL2, ADSL2+, VDSL1, VDSL2, HDSL, DSL Lite, IDSL, RADSL, SDSL, UDSL or the like.

[0113] Additionally, the systems, methods and protocols of this invention can be implemented on a special purpose computer, a programmed microprocessor or microcontroller and peripheral integrated circuit element(s), an ASIC or other integrated circuit, a digital signal processor, a hard-wired electronic or logic circuit such as discrete element circuit, a programmable logic device such as PLD, PLA, FPGA, PAL, a modem, a transmitter/receiver, any comparable means, or the like. In general, any device capable of implementing a state machine that is in turn capable of implementing the methodology illustrated herein can be used to implement the various communication methods, protocols and techniques according to this invention.

[0114] Furthermore, the disclosed methods may be readily implemented in software using object or object-oriented software development environments that provide portable source code that can be used on a variety of computer or workstation platforms. Alternatively, the disclosed system may be implemented partially or fully in hardware using standard logic circuits or VLSI design. Whether software or hardware is used to implement the systems in accordance with

this invention is dependent on the speed and/or efficiency requirements of the system, the particular function, and the particular software or hardware systems or microprocessor or microcomputer systems being utilized. The communication systems, methods and protocols illustrated herein can be readily implemented in hardware and/or software using any known or later developed systems or structures, devices and/or software by those of ordinary skill in the applicable art from the functional description provided herein and with a general basic knowledge of the computer and telecommunications arts.

[0115] Moreover, the disclosed methods may be readily implemented in software that can be stored on a storage medium, executed on programmed general-purpose computer with the cooperation of a controller and memory, a special purpose computer, a microprocessor, or the like. In these instances, the systems and methods of this invention can be implemented as program embedded on personal computer such as an applet, JAVA® or CGI script, as a resource residing on a server or computer workstation, as a routine embedded in a dedicated communication system or system component, or the like. The system can also be implemented by physically incorporating the system and/or method into a software and/or hardware system, such as the hardware and software systems of a communications transceiver.

[0116] It is therefore apparent that there has been provided, in accordance with the present invention, systems and methods for packet retransmission and memory sharing. While this invention has been described in conjunction with a number of embodiments, it is evident that many alternatives, modifications and variations would be or are apparent to those of ordinary skill in the applicable arts. Accordingly, it is intended to embrace all such alternatives, modifications, equivalents and variations that are within the spirit and scope of this invention.

Claims

1. An apparatus comprising a multicarrier transceiver operable to:

store a packet in a retransmission memory;
transmit the packet using RS coding and interleaving, wherein the packet comprises a header field and a plurality of bytes, and wherein the header field comprises a sequence identifier; and
receive a message without using deinterleaving, wherein the message is received in a single DMT symbol and wherein the message indicates whether the packet needs to be retransmitted,
wherein the received message is received on subcarriers with a higher SNR margin than the transmitted packet.

2. The apparatus of claim 1, wherein the transceiver is operable to retransmit the packet using RS coding and interleaving.

3. The apparatus of claim 1 or 2, wherein the message indicates at least one count value associated with the packet.

4. The apparatus of any one of claims 1 to 3, wherein the SNR margin of the received message is greater than 6 dB.

5. An apparatus comprising a multicarrier transceiver operable to:

receive a packet using deinterleaving and RS decoding, wherein the packet comprises a header field and a plurality of bytes and wherein the header field comprises a sequence identifier;
store the packet in a retransmission memory; and
transmit a message without using deinterleaving, wherein the message is transmitted in a single DMT symbol and wherein the message indicates whether the packet needs to be retransmitted,
wherein the transmitted message is transmitted on subcarriers with a higher SNR margin than the received packet.

6. The apparatus of claim 5, wherein the transceiver is operable to receive a retransmitted packet using the deinterleaving and RS decoding.

7. The apparatus of claim 5 or 6, wherein the message indicates at least one count value associated with the packet.

8. The apparatus any one of claims 5 to 7, wherein the SNR margin of the message is greater than 6 dB.

9. A method in an apparatus comprising a multicarrier transceiver, the method comprising:

transmitting a packet using RS coding and interleaving, wherein the packet comprises a header field and a

plurality of bytes and wherein the header field comprises a sequence identifier; and
receiving a message using RS decoding and without using deinterleaving, wherein the message is received in a single DMT symbol and wherein the message includes an acknowledgement or a negative acknowledgement of the transmitted packet,
wherein the received message is received on subcarriers with a higher SNR margin than the transmitted packet.

10. The method of claim 9, further comprising retransmitting the packet using RS encoding and interleaving.

11. The method of claim 9 or 10, wherein the message indicates at least one count value associated with the packet.

12. The method any one of claims 9 to 11, wherein the SNR margin of the received message is greater than 6 dB.

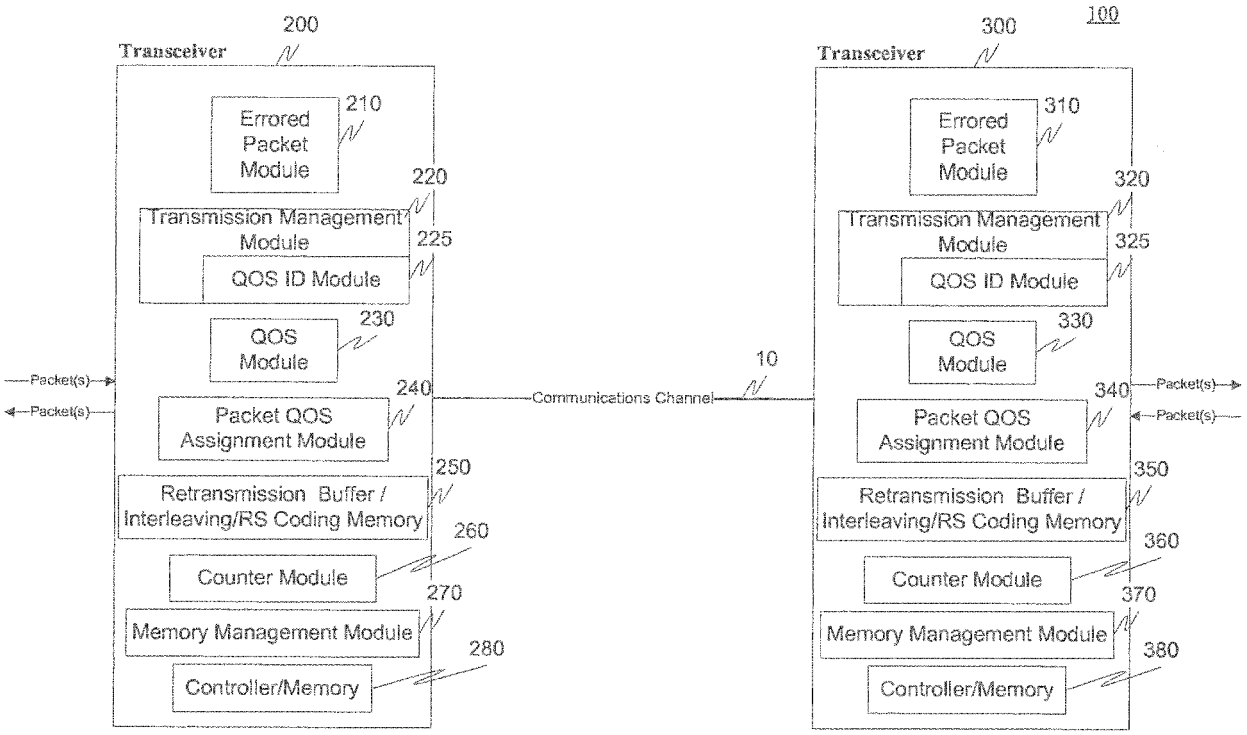
200
Transceiver
Errored Packet Module
210
220
Transmission Management Module
225
QOS ID Module
230
QOS Module
240
Packet QOS Assignment Module
250
Retransmission Buffer / Interleaving/RS Coding Memory
260
Counter Module
270
Memory Management Module
280
Controller/Memory
Packet(s)
Packet(s)
10
Communications Channel
300
100
Transceiver
Errored Packet Module
310
320
Transmission Management Module
325
QOS ID Module
330
QOS Module
340
Packet QOS Assignment Module
350
Retransmission Buffer / Interleaving/RS Coding Memory
360
Counter Module
370
Memory Management Module
380
Controller/Memory
Packet(s)
Packet(s)

Fig. 1

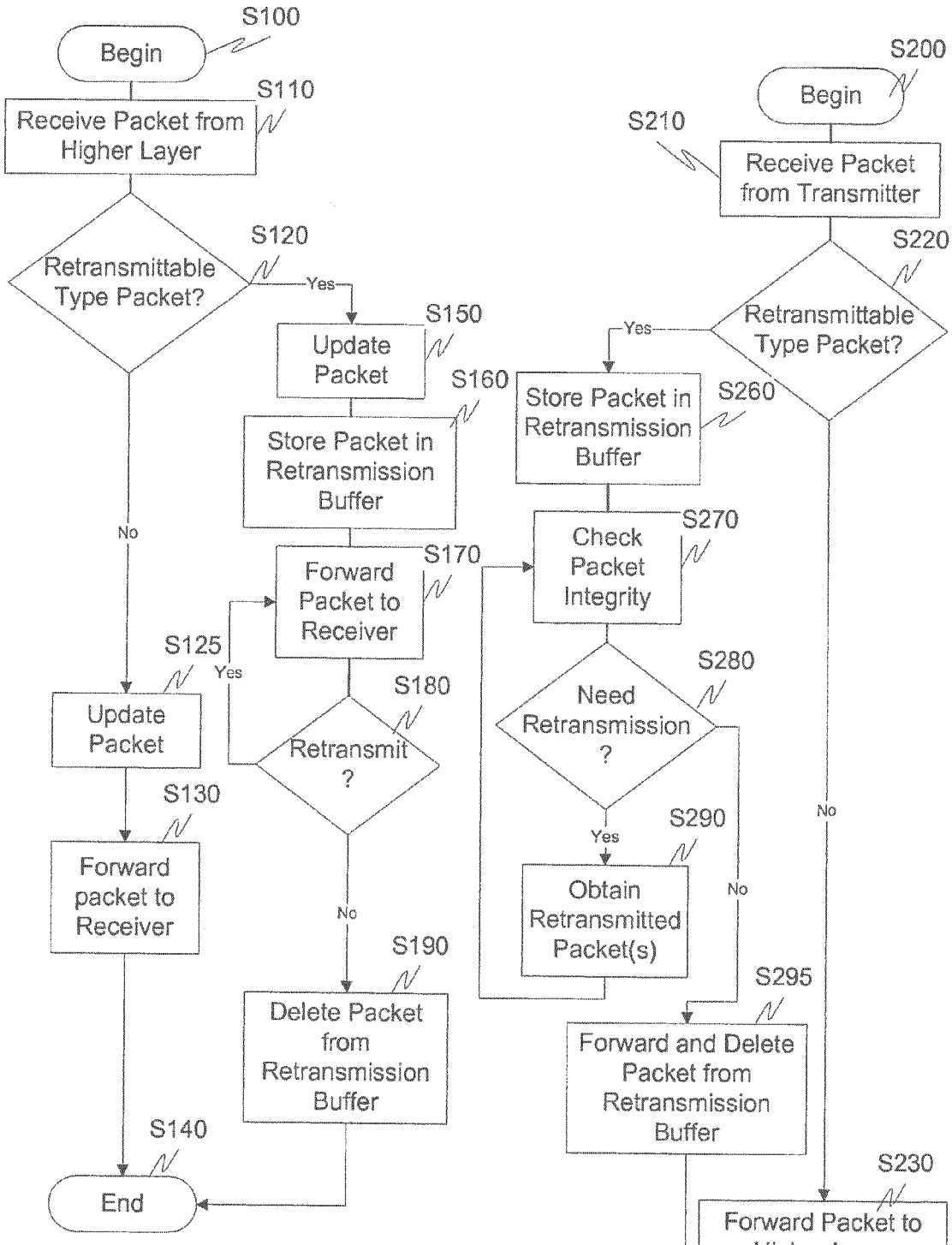
S100
Begin
S110
Receive Packet from Higher Layer
S120
Retransmittable Type Packet?
Yes
No
S150
Update Packet
S160
Store Packet in Retransmission Buffer
S170
Forward Packet to Receiver
S180
Retransmit ?
Yes
No
S125
Update Packet
S130
Forward packet to Receiver
S190
Delete Packet from Retransmission Buffer
S140
End

Fig. 2

S200
Begin
S210
Receive Packet from Transmitter
S220
Retransmittable Type Packet?
Yes
No
S260
Store Packet in Retransmission Buffer
S270
Check Packet Integrity
S280
Need Retransmission ?
Yes
No
S290
Obtain Retransmitted Packet(s)
S295
Forward and Delete Packet from Retransmission Buffer
S230
Forward Packet to Higher Layer
S240
End

Fig. 3

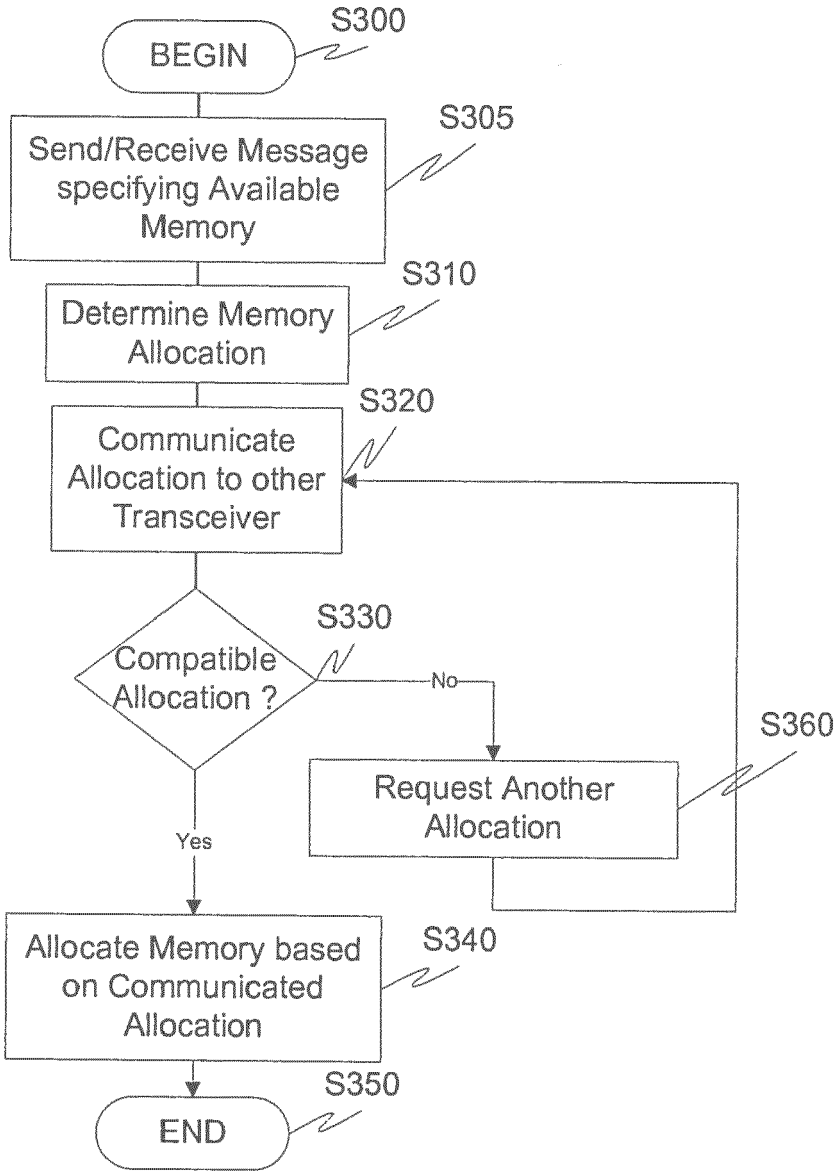
S300
BEGIN
S305
Send/Receive Message specifying Available Memory
S310
Determine Memory Allocation
S320
Communicate Allocation to other Transceiver
S330
Compatible Allocation ?
No
Yes
S360
Request Another Allocation
S340
Allocate Memory based on Communicated Allocation
S350
END

Fig. 4

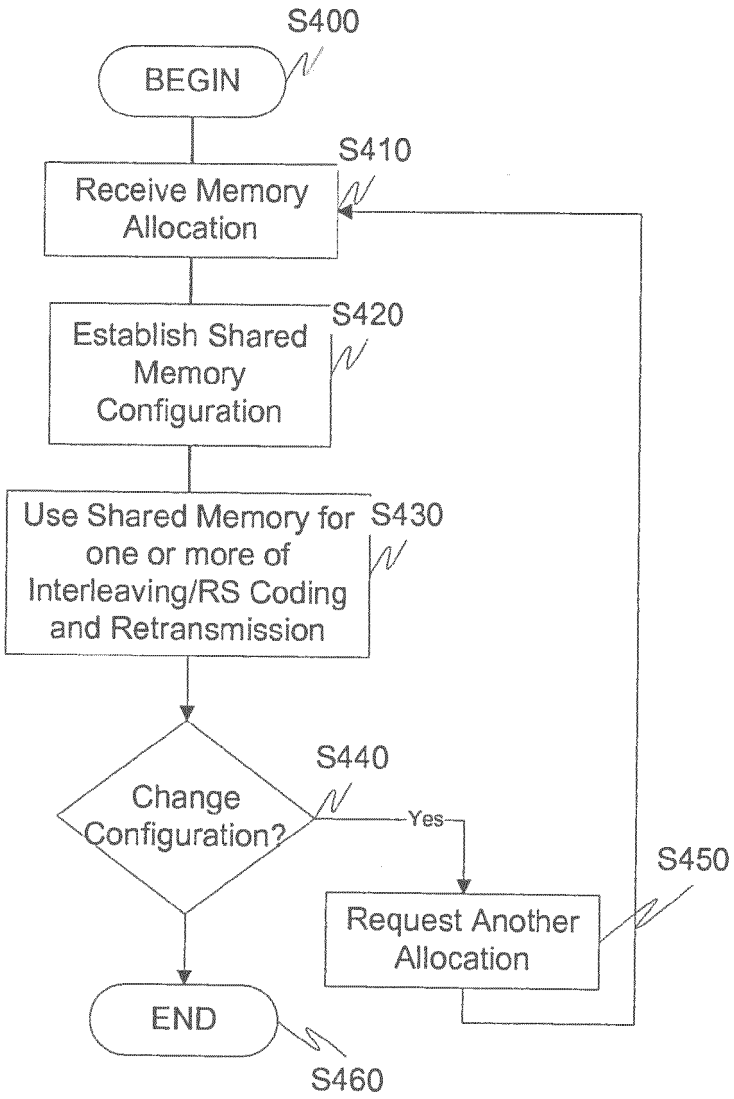
S400
BEGIN
S410
Receive Memory Allocation
S420
Establish Shared Memory Configuration
S430
Use Shared Memory for one or more of Interleaving/RS Coding and Retransmission
S440
Change Configuration?
Yes
S450
Request Another Allocation
END
S460

Fig. 5

Europäisches Patentamt
European Patent Office
Office européen des brevets

EUROPEAN SEARCH REPORT

Application Number
EP 17 02 0525

DOCUMENTS CONSIDERED TO BE RELEVANT

Category	Citation of document with indication, where appropriate, of relevant passages	Relevant to claim	CLASSIFICATION OF THE APPLICATION (IPC)
X	US 2001/031011 A1 (BETTS WILLIAM L [US]) 18 October 2001 (2001-10-18) * paragraph [0035] - paragraph [0038]; figures 2,5 * * paragraph [0037] - paragraph [0038] * * paragraph [0009] *	1-12	INV. H04L12/801 H04L12/721 H04L12/54
A	US 2003/076870 A1 (MOON YONG-SUK [KR] ET AL) 24 April 2003 (2003-04-24) * paragraph [0030] - paragraph [0039]; figures 1,7, 9 *	1-12	
A	EP 0 833 474 A2 (MOTOROLA INC [US]) 1 April 1998 (1998-04-01) * claim 1; figure 5 *	1-12	

TECHNICAL FIELDS SEARCHED (IPC)

H04L

The present search report has been drawn up for all claims

Place of search	Date of completion of the search	Examiner
The Hague	15 February 2018	Gregori, Stefano

CATEGORY OF CITED DOCUMENTS

X : particularly relevant if taken alone
Y : particularly relevant if combined with another document of the same category
A : technological background
O : non-written disclosure
P : intermediate document

T : theory or principle underlying the invention
E : earlier patent document, but published on, or after the filing date
D : document cited in the application
L : document cited for other reasons

& : member of the same patent family, corresponding document

EPO FORM 1503 03.82 (P04C01)

ANNEX TO THE EUROPEAN SEARCH REPORT ON EUROPEAN PATENT APPLICATION NO. EP 17 02 0525

This annex lists the patent family members relating to the patent documents cited in the above-mentioned European search report. The members are as contained in the European Patent Office EDP file on
The European Patent Office is in no way liable for these particulars which are merely given for the purpose of information.

15-02-2018

Patent document cited in search report	Publication date	Patent family member(s)	Publication date
US 2001031011 A1	18-10-2001	US 2001031011 A1	18-10-2001
		US 2006269010 A1	30-11-2006
		US 2009034663 A1	05-02-2009
US 2003076870 A1	24-04-2003	AU 2002301552 B2	29-04-2004
		CA 2408875 A1	19-04-2003
		CN 1434647 A	06-08-2003
		DE 10248706 A1	15-05-2003
		FI 20021864 A	20-04-2003
		FR 2831369 A1	25-04-2003
		GB 2381719 A	07-05-2003
		JP 3566273 B2	15-09-2004
		JP 2003198429 A	11-07-2003
		KR 20030032698 A	26-04-2003
		US 2003076870 A1	24-04-2003
EP 0833474 A2	01-04-1998	EP 0833474 A2	01-04-1998
		US 5737337 A	07-04-1998

EPO FORM P0459

For more details about this annex : see Official Journal of the European Patent Office, No. 12/82

REFERENCES CITED IN THE DESCRIPTION

This list of references cited by the applicant is for the reader's convenience only. It does not form part of the European patent document. Even though great care has been taken in compiling the references, errors or omissions cannot be excluded and the EPO disclaims all liability in this regard.

Patent documents cited in the description

- US 79223606 P **[0001]**
- US 60849650 B **[0001]**

摘要

通過識別不同的數據包類型，可以基於分配的數據包處理標識符來處理數據包。 例如，該標識符可以無延遲地轉發對延遲敏感的數據包，並且允許存儲對錯誤敏感的數據包以用於可能的重傳。 在另一個實施例中，並且可選地結合包括數據包處理標識符的重傳協議，用於轉發數據包的存儲器可以與其他收發器功能共享，例如編碼，解碼，交織，解交織，糾錯等。