(12) UK Patent Application (19) GB (11) 2 155 388 A

(43) Application published 25 Sep 1985

(21) Application No 8406159

(22) Date of filing 9 Mar 1984

(51) INT CL[4]
B29C 33/12

(52) Domestic classification
B5A 1R442 20T3 B19 B2
U1S 1916 B5A

(56) Documents cited
None

(58) Field of search
B5A

(71) Applicant
Philips Electronic and Associated Industries Limited,
(United Kingdom),
Arundel Great Court, 8 Arundel Street, London WC2R 3DT

(72) Inventor
Harry Howden

(74) Agent and/or Address for Service
R. J. Boxall,
Mullard House, Torrington Place, London WC1E 7HD

(54) Moulding an accurately centred lens surface

(57) In the production of a lens element having on one side a replicated aspherical surface which is accurately axially aligned with a spherical or flat surface on the reverse side of the element, a mould tool (9) with a moulding surface having an accurate negative profile of the required aspherical surface on the lens element and having the desired optical finish of this surface is mounted on a rotatable jig (1) and by means of adjustment screws (4 and 6) is adjusted to correct misalignment of the axis of the moulding surface and the axis of rotation (J) of the jig. The misalignment is detected by directing a collimated light beam (13) onto a moulding surface so that it is reflected onto a screen (14) while the mould tool is rotated by means of the jig. A preformed glass lens substrate (15) having on one side an aspherical surface (16) of approximately the desired profile and finish and on the reverse side a spherical or flat surface (17) is then mounted on the jig with its aspherical surface facing and spaced from the moulding surface of the mould tool, and by means of further adjustment screws (7 and 8) the substrate is adjusted to correct misalignment of the axis (S) of the spherical or flat surface of the substrate and the rotational axis of the jig. This misalignment also is detected with the aid of the collimated light beam and the screen. The gap (18) between the substrate and the mould tool is then filled with a suitable light-transmissive polymeric material in liquid form, which is allowed to harden and form a moulded layer bonded on one side to the substrate and presenting on the other side an aspherical surface of the required profile and optical finish, axially aligned with the spherical or flat surface of the substrate.

Fig. 2.

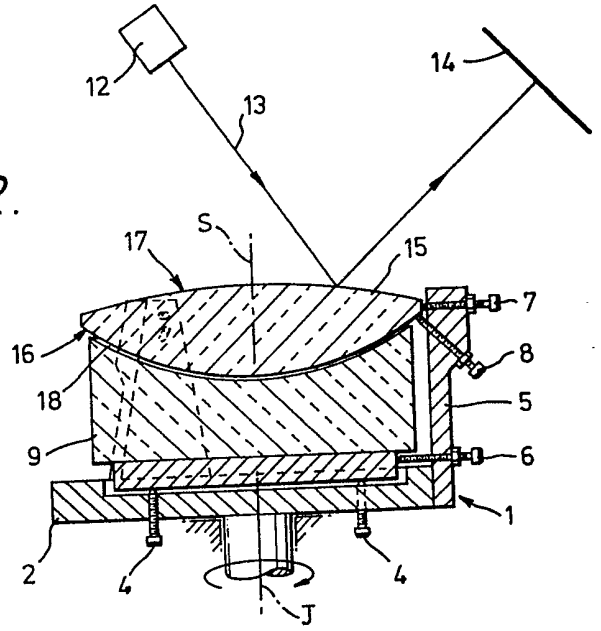

The drawing(s) originally filed was (were) informal and the print here reproduced is taken from a later filed formal copy.
This print embodies corrections made under Section 117(1) of the Patents Act 1977.

GB 2 155 388 A

Fig.1.

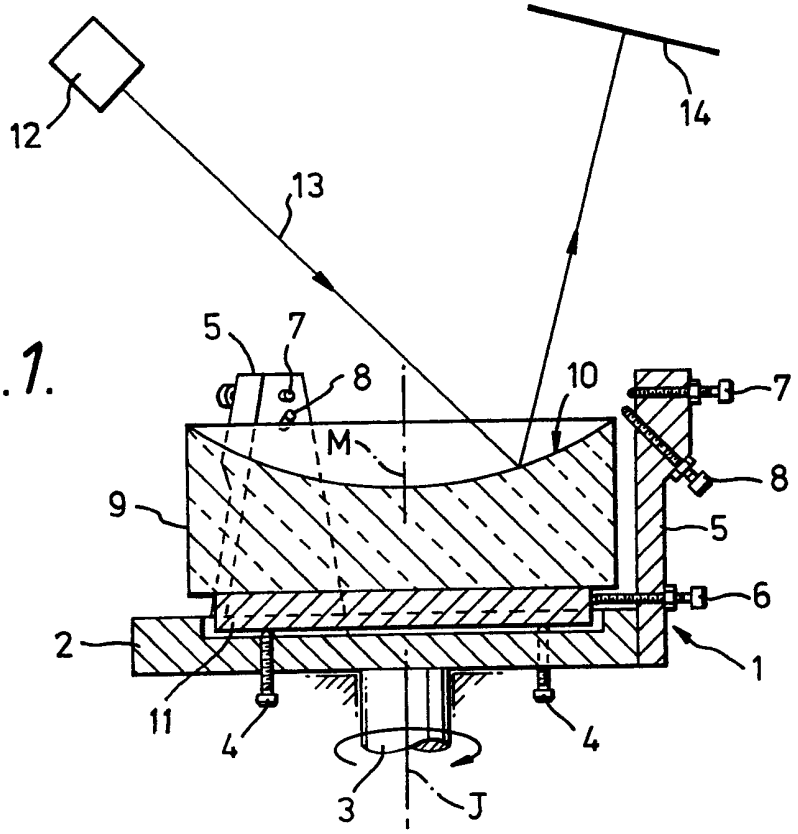
12
13
14
5
7
8
10
M
9
7
8
5
6
2
1
11
4
4
3
J

Fig.2.

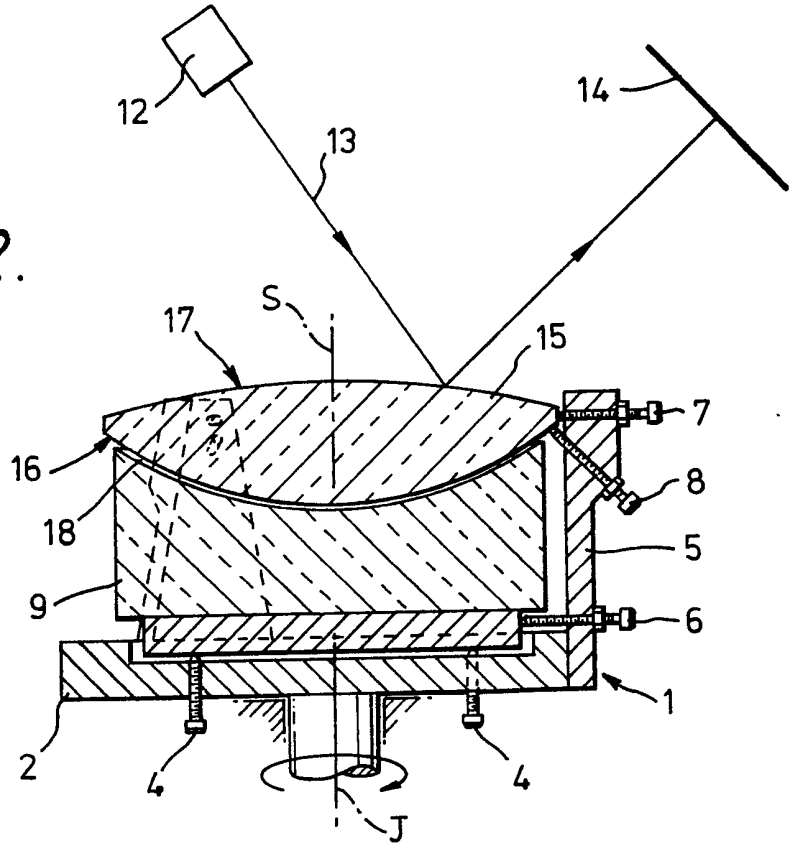
12
13
14
S
17
15
16
18
7
8
5
9
6
1
2
4
4
J

2155388

Fig. 3.

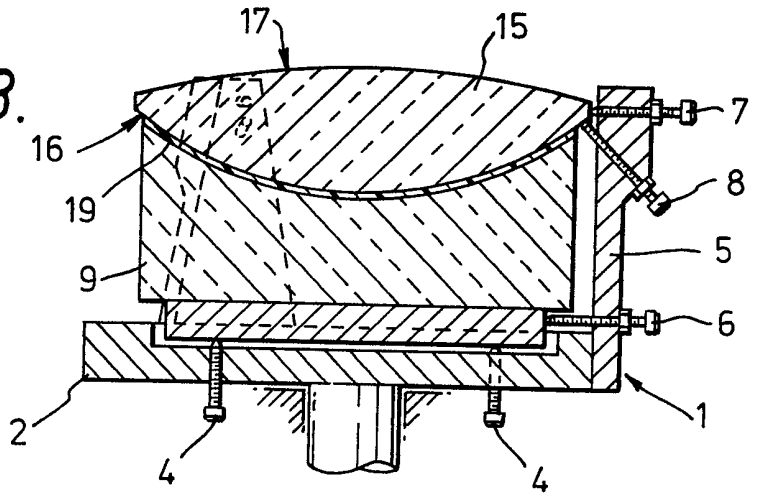

Fig. 4.

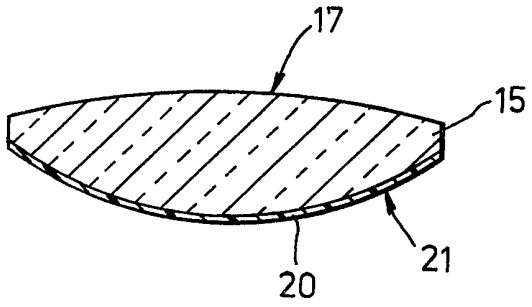

SPECIFICATION

Method of producing a lens element having an accurately centred aspherical surface formed by replication, and apparatus for carrying out the method .

The invention relates to a method of producing a lens element having on one side a replicated aspherical surface which is accurately centred, i.e., axially aligned, with respect to a non-aspherical surface on the reverse side of the element, each surface being a surface of revolution. The non-aspherical surface may be spherical or flat.

Until recently the forming of aspherical surfaces on optical elements by replication has been limited to elements which require only a fairly low order of accuracy in the centring of the aspherical surface, for example, Schmidt corrector plates. The use of replication techniques is now being extended to more critical optical elemets, such as lens elements for projection T.V. systems, which demand a much greater centring accuracy, and it is an object of the present invention to satisfy this demand.

According to the invention there is provided a method of producing a lens element having on one side a replicated aspherical surface which is accurately axially aligned with a non-aspherical surface on the reverse side of the element, each surface being a surface of revolution, comprising the steps of performing a glass lens substrate having on one side an aspherical surface of approximately the desired profile and finish of the required aspherical surface on the finished lens element and on the reverse side a non-aspherical surface, forming on a mould tool a moulding surface having an accurate negative profile of the required aspherical surface on the finished lens element and having the desired optical finish of this surface, mounting the mould tool on a rotatable jig and, by rotating the mould tool by means of the jig to detect misalignment of the axis of the moulding surface and the axis of rotation of the jig and adjusting the mould tool on the jig to correct such misalignment, positioning the mould tool on the jig with the axis of the moulding surface accurately aligned with the rotating axis of the jig, securing the mould tool in this position on the jig, mounting the preformed lens substrate on the jig with the aspherical surface of the substrate facing and spaced from the moulding surface of the mould tool and, by rotating the substrate by means of the jig to detect misalignment of the axis of the non-aspherical surface of the substrate and the rotational axis of the jig and adjusting the substrate on the jig to correct such misalignment, positioning the substrate on the jig with the axis of the non-aspherical surface of the substrate accurately aligned with the rotational axis of the jig and with a distance between said non-aspherical surface and the moulding surface, measured along the aligned axes of these surfaces, which is equal to the desired axial thickness of the finished lens element, filling the space between the aspherical surface of the substrate and the moulding surface with a liquid light-transmissive polymeric material, bonding this material to the aspherical surface of the substrate while moulding the material to form the required aspherical surface, and subsequently separating the substrate, with the moulded layer of polymeric material bonded thereto, from the moulding surface.

The adjustment of the mould tool and the adjustment of the lens substrate may each comprise translational adjustment in a direction or directions transverse to the axis of rotation of the jig and/or rotational adjustment about an axis or axes perpendicular to the axis of rotation of the jig, and the adjustment of the substrate may also comprise adjustment axially of the jig relative to the mould tool.

Prior to separation of the substrate from the mould tool the edge of the substrate may be ground to give the finished lens element an edge which is concentric with the aligned axes of the aspherical and non-aspherical surfaces of the lens element.

The invention also provides an apparatus for carrying out the method according to the invention, the apparatus comprising a rotatable jig for supporting the mould tool and the preformed lens substrate, means which are operable upon rotation of the mould tool and rotation of the substrate by means of the jig to detect misalignment of the axes of the moulding surface of the mould tool and the non-aspherical surface of the substrate and the axis of rotation of the jig, means for adjusting the mould tool on the jig to correct misalignment of the axis of the moulding surface and the rotational axis of the jig and for securing the mould tool in a position on the jig in which these two axes are accurately aligned with each other, and means for adjusting the substrate on the jig to correct misalignment of the axis of the non-aspherical surface of the substrate and the rotational axis of the jig and position the substrate on the jig with these two axes accurately aligned with each other, and for adjusting the substrate axially of the jig relative to the mould tool to set the distance between the said non-aspherical surface and the moulding surface, measured along the aligned axes of these surfaces, to a desired value.

The means for adjusting the mould tool and the means for adjusting the substrate may comprise screwthreaded adjusting devices on the jig which are arranged for adjusting the mould tool and the substrate translationally in directions transverse to the axis of rotation of the jig and rotationally about axes perpendicular to the axis of rotation of the jig, and for adjusting the substrate axially of the jig relatively to the mould tool.

An example of the method according to the invention and an embodiment of the apparatus for carrying out the method will now be described with reference to the accompanying drawings, in which

Figure 1 is an axial sectional view of the jig with a mould tool mounted on it,illustrating diagrammatically the detection of axial misalignment of the

mould tool and jig.

Figure 2 is a view similar to Figure 1 showing a preformed lens substrate mounted on the jig above the mould tool and illustrates the detection of axial misalignment of the substrate of the jig.

Figure 3 is another axial sectional view showing the gap between the substrate and the mould tool filled with polymeric material, and

Figure 4 is an axial sectional view of the finished lens element after separation from the mould tool.

The jig 1 shown in Figures 1,2, and 3 is supported for rotation about a vertical axis J and comprises a generally circular horizontal base-plate 2 fixed on a vertical shaft 3 which is arranged to be driven by an electric motor (not shown). Extending parallel to the axis J through screwthreaded bores in the base-plate 1 are three or more adjustment screws 4 which are equally spaced about the axis of the shaft 3, which is the axis of rotation of the jig. In the present embodiment there are three of these adjustment screws in the base-plate.

Projecting upwardly from the base-plate at the periphery thereof are three posts 5 which are equally spaced around the periphery of the base-plate. There may be more than three of these posts if desired. In the lower part of each post is an adjustment screw 6 which extends radially with respect to the axis of rotation J of the jig through a screwthread bore in the post. In the upper part of each post are an adjustment screw 7 which also extends radially with respect to the axis of rotation J of the jig through a screwthreaded bore in the post, and below the screw 7 an adjustment screw 8 which extends through a bore which is inclined upwardly from the outer side of the post to the inner side.

Figure 1 shows a mould tool 9 mounted on the jig 1. The mould tool consists of a glass block of cylindrical form provided on one side with a moulding surface 10 having an accurate negative or reverse profile of the required aspherical surface on the lens element to be produced, which surface is a surface of revolution. In the present example this aspherical surface is a convex surface and the moulding surface 10 therefore a concave surface. The moulding surface 10 is formed by hand figuring and polishing to the desired profile accuracy and optical finish of the required aspherical surface on the lens element. On the side remote from the moulding surface 10 the mould tool 9 is flat, and to mount the mould tool on the jig 1 the tool is secured at this side, for example, by waxing, to a circular steel plate 11 which is then placed on the tips of the adjustment screws 4 in the base-plate 2 of the jig so as to be level with the radial adjustment screws 6 in the lower parts of the posts 5 of the jig. The mould tool is roughly centred by eye on the jig and the adjustment screws 6 are turned to bring their inner ends into engagement with the edge of the plate 11.

The mould tool 9 now has to be accurately centred on the jig 1, that is to say, the axis M of the moulding surface 10. i.e., the axis about which this surface of revolution is generated, has to be accurately aligned with the axis of rotation J of the jig. This is done with the aid of means for detecting misalignment of the two axes. These means may be of known kind used in centring a lens element having a spherical surface on both sides. In the present embodiment the means comprise a light source 12 which directs a collimated light beam 13 onto the moulding surface 10 at a point spaced from the axis M of this surface. The beam is reflected by the moulding surface onto a screen 14. The mould tool 9 is rotated by means of the jig and if, as is likely, there is misalignment of the axis M of the moulding surface 10 and the rational axis J of the jig, the spot of reflected light on the screen 14 will move as the mould tool rotates. The mould tool is then adjusted as necessary on the jig by means of the adjustment screws 4 and/or the adjustment screws 6 until the light spot remains motionless on the screen, which indicates that the two axis M and J are accurately aligned with each other. The mould tool is adjustable rotationally about axes perpendicular to the axis J of the jig by means of the vertical adjustment screws 4 and translationally in directions perpendicular to the axis J by means of the radial adjustment screws 6. When the adjustment has been completed the screws 6 are tightened to clamp the mould tool in the centred position on the jig 1.

Figure 2 shows a preformed glass lens substrate 15 mounted on the jig 1 above the mould tool 9. The substrate is produced in known manner. On one side it has an aspherical surface of approximately the desired profile and finish of the required aspherical surface on the lens element to be produced. The surface 16 is formed in known manner by a conventional cheap production technique, for example, moulding, Machining and/or grinding. On the reverse side the substrate 15 is provided with a spherical surface 17, which is also formed in known manner by conventional grinding and polishing techniques. The surface 17 is a surface of revolution generated about an axis S.

The substrate 15 is given a diameter slightly larger than that of the mould tool 9 so that when the substrate is placed on the jig 1 above the mould tool a peripheral portion of the substrate projects beyond the periphery of the mould tool to rest on the tips of the upwardly inclined adjustment screws 8 on the jig, as shown in Figure 2. The substrate is initially mounted in a roughly centred position on the screws 8, with its aspherical surface 16 facing the moulding surface 10 of the mould tool and spaced from this surface by a gap 18, and the upper radial adjustment screws 7 in the posts 5 of the jig 1 are turned to bring their inner ends into engagement with the edge of the substrate. The substrate is then centred accurately on the jig 1 in a similar manner to that in which the mould tool 9 was centred. Thus, by directing the beam 13 from the light source 12 onto the spherical surface 17 of the substrate for reflection onto the screen 14 while the substrate is rotated by means of the jig, misalignment of the axis S of the surface 17 and the axis of rotation J of the jig can be detected, and by means of the adjustment screws 7 and 8 the misalignment can be corrected. The substrate is adjust-

able translationally in directions transverse to the axis J of the jig by means of the radial adjustment screws 7 and rotationally about axes perpendicular to the axis J by means of the inclined adjustment screws 8. When the axis S of the spherical surface 17 of the substrate is accurately aligned with the axis J of the jig it is *ipso facto* accurately aligned with the axis M of the moulding surface 10 of the mould tool 9.

The substrate is also adjustable axially of the jig 1 relative to the mould tool 9 by means of the inclined adjustment screws 8 to set the distance between the spherical surface 17 of the substrate and the moulding surface 10 of the mould tool, measured along the aligned axis of these surfaces, to the desired axial thickness of the finished lens element. When the adjustments of the substrate have been completed, the radial adjustment screws are tightened to clamp the substrate in position on the jig 1.

The actual process of replicating the required aspherical surface can now be carried out. This is a known process and need not be described in detail. It consists of filling the gap 18 between the aspherical surface 16 of the substrate 15 and the moulding surface 10 of the mould tool 9 with a suitable light-transmissive polymeric material in liquid form, as shown at 19 in Figure 3, and allowing the material to harden to form a moulded layer which on one side is bonded to the relatively inaccurate aspherical surface of the substrate and on the other side presents an aspherical surface of the desired profile accuracy and optical finish, reproduced from the moulding surface of the mold tool. If desired, before mounting the substrate on the jig the asperical surface 16 of th e substrate may be treated with a bonding-promoting agent.

The substrate, with the moulded layer bonded to it, is subsequently separated from the mould tool 9 but before this the edge of the substrate is ground down to the required diameter of the finished lens element. This also gives a lens element an edge which is truly concentric with the aligned axes of the spherical and aspherical surfaces of the lens element so that the element as a whole will be accurately centred with respect to the mounting in which it is subsequently fitted. The finished lens element is shown in Figure 4, in which the moulded layer is designated 21. The separation of the moulded layer from the moulding surface 10 of the mould tool 9 may be assisted by treating the latter surface with a release agent prior to mounting the mould tool on the jig 1. The same mould tool may, of course, be used repeatedly to produce a large number of the lens element.

In the above example th e method according to the invention is used to produce a lens element having a convex aspherical surface. The method may also be used to produce a lens element having a concave aspherical surface.

Instead of a collimated light beam a laser beam may be used in the means described for detecting misalignment of the axes of the moulding surface of the mould tool and the aspherical surface of the moulding surface of the mould tool and the aspherical surface of the substrate and the axis of rotation of the jig. Other known means may be used for this purpose: for example, an electrically sensitive stylus or a stylus coupled to a mechanical clock guage.

CLAIMS

1. A method of producing a lens element having on one side a replicated aspherical surface which is accurately axially aligned with a non-aspherical surface on the reverse side of the element, each surface being a surface of revolution, comprising the steps of preforming a glass lens substrate having on one side an aspherical surface of approximately the desired profiled and finish of the required aspherical surface on the finished lens element and on the reverse side a non-aspherical surface, forming on a mould tool a moulding surface having an accurate negative profile of the required aspherical surface on the finished lens element and having the desired optical finish of this surface, mounting the mould tool on a rotatable jig and, by rotating the mould tool by means of the jig to detect misalignment of the axis of the moulding surface and the axis of rotation of the jig and adjusting the mould tool on the jig to correct such misalignment, positioning the mould tool on the jig with the axis of the moulding surface accurately aligned with the rotational axis of the jig, securing the mould tool in this position on the jig, mounting the preformed lens substrate on the jig with the aspherical surface of the substrate facing and spaced from the moulding surface of the mould tool and, by rotating the substrate by means of the jig to detact misalignment of the axis of the non-aspherical surface of the substrate and the rotational axis of the jig and adjusting the substrate on the jig to correct such misalignment, positioning the substrate on the jig with the axis of the non-aspherical surface of the substrate accurately aligned with the rotational axis of the jig and with a distance between said non-aspherical surface and the moulding surface, measured along the aligned axes of these surfaces, which is equal to the desired axial thickness of the finished lens element, filling the space between the aspherical surface of the substrate and the moulding surface with a liquid light-transmissive polymeric material, bonding this material to the aspherical surface of the substrate while moulding the material to form the required aspherical surface, and subsequently separating the substrate, with the moulded layer of polymeric material bonded thereto, from the moulding surface.

2. A method as claimed in Claim 1, characterised in that the adjustment of the mould tool and the adjustment of the lens substrate each comprise translational adjustment in a direction or directions transverse to the axis of rotation of the jig and/or rotational adjustment about an axis or axes perpendicular to the axis of rotation of the jig, and the adjustment of the substrate also comprises adjustment axially of the jig relative to the mould tool.

3. A method as claimed in Claim 1 or 2, charac-

terised in that prior to separation of the substrate from the mould tool the edge of the substrate is ground to give the finished lens element an edge which is concentric with the aligned axes of the aspherical and non-aspherical surfaces of the lens element.

4. A method of producing a lens element having on one side a replicated aspherical surface which is accurately centred with respect to a non-aspherical surface on the reverse side of the element, the method being substantially as herein described with reference to the accompanying drawings.

5. A lens element produced by the method claimed in Claim 1,2,3 or 4.

6. An apparatus for carrying out the method claimed in Claim 1, comprising a rotatable jig for supporting the mould tool and preformed lens substrate, means which are operable upon rotation of the mould tool and rotation of the substrate by means of the jig to detect misalignment of the axes of the moulding surface of the mould tool and the non-aspherical surface of the substrate and the axis of rotation of the jig, means for adjusting the mould tool on the jig to correct misalignment of the axis of the moulding surface and the rotational axis of the jig and for securing the mould tool in a position on the jig in which these two axes are accurately aligned with each other, and means for adjusting the substrate on the jig to correct misalignment of the axis of the non-aspherical surface of the substrate and the rotational axis of the jig and position the substrate on the jig with these two axes accurately aligned with each other, and for adjusting the substrate axially of the jig relatively to the mould tool to set the distance between said non-aspherical surface and the moulding surface, measured along the aligned axes of these surfaces to a desired value.

7. An apparatus as claimed in Claim 6 for carrying out the method claimed in Claim 2, characterized in that the means for adjusting the mould tool and the means for adjusting the substrate comprise screwthreaded adjusting devices on the jig which are arranged for adjusting the mould tool and the substrate translationally in directions transverse to the axis of rotation of the jig and rotationally about axes perpendicular to the axis of rotation of the jig, and for adjusting the substrate axially of the jig relatively to the mould tool.

8. An apparatus substantially as herein described with reference to the accompanying drawings.

Printed in the UK for HMSO, D8818935, 8/85, 7102.
Published by The Patent Office, 25 Southampton Buildings, London, WC2A 1AY, from which copies may be obtained.