March 13, 1956 E. S. SANDBERG 2,738,447

ELECTRIC CLOCK

Filed Jan. 7, 1953

Fig. 1

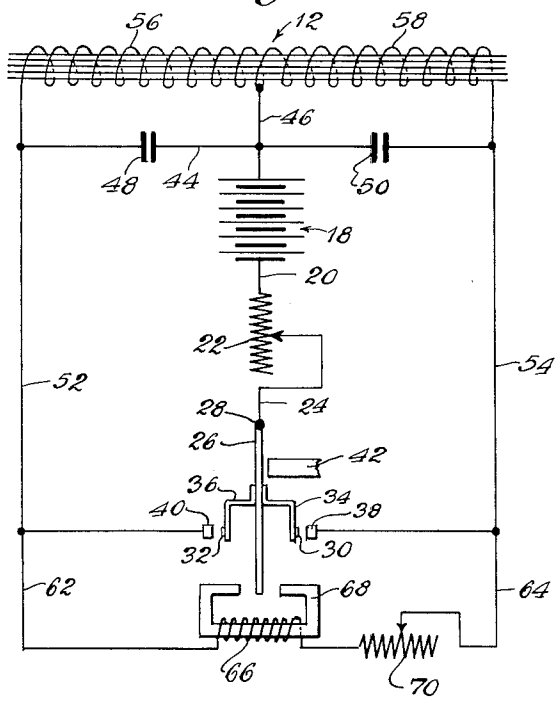


Fig. 3

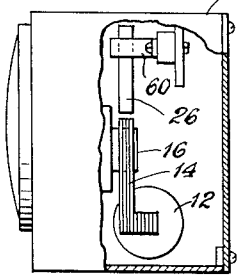


Fig. 4

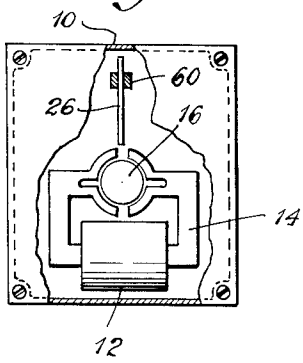


Fig. 2

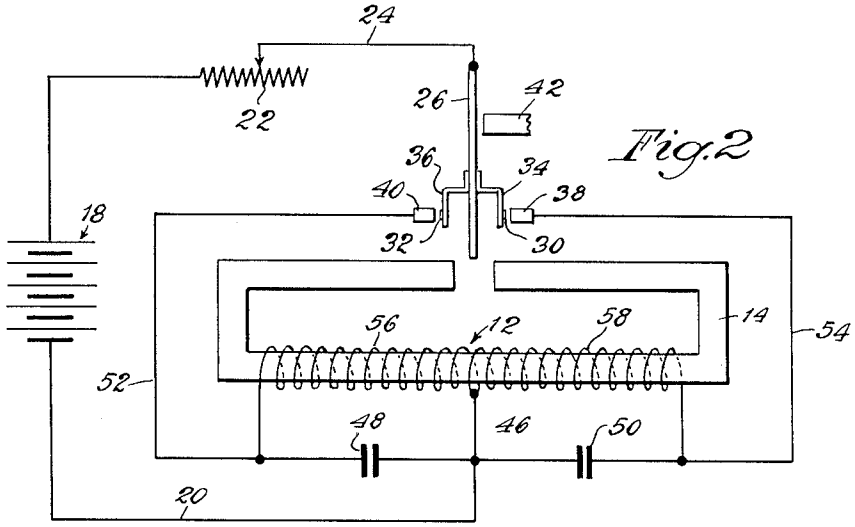


Inventor
Eugene S. Sandberg
by Parker & Carter.
Attorneys

United States Patent Office 2,738,447 Patented Mar. 13, 1956



2,738,447

# ELECTRIC CLOCK

Eugene S. Sandberg, Oak Park, Ill.

Application January 7, 1953, Serial No. 330,081

3 Claims. (Cl. 317—123)

My invention relates to an electric clock and particularly to means for operating an electric clock which is powered with a synchronous alternating current motor by direct current means which creates an alternating magnetic field. It has for one object, therefore, mechanism operated by direct current and effective to create an alternating magnetic field.

Another object of my invention is means for operating a synchronous motor clock designed for use primarily in connection with alternating current in a vehicle by means of the direct current normally available on said vehicle for other purposes.

Other objects will appear from time to time throughout the specification and drawings, in which:

Figure 1 is a schematic diagram illustrating one form of circuits and parts of my invention;

Figure 2 is a similar schematic diagram illustrating the circuits and parts of a second form of my invention;

Figure 3 is a side view, partly in section, of a conventional clock showing the disposition of a portion of my invention relative thereto; and

Figure 4 is a rear view of the clock mechanism shown in Figure 3.

This is a continuation-in-part of application Serial No. 79,063, filed March 1, 1949, now abandoned.

In Figures 3 and 4 I show a conventional clock housing **10** which has the usual field coil windings **12** and a U-shaped core **14**. Positioned between the arms of the core is a conventional rotor **16**.

When it is desired to use a clock in automobiles it becomes necessary to convert the direct current, which is always present in moving vehicles, to an alternating field. Various types of electrical equipment and systems have been employed to perform this very desirable operation, however, none have proved entirely successful as most present-day automobile operators know. Accordingly, my invention relates to an electrical circuit for converting direct current to an alternating field so that satisfactory operation can be obtained from a conventional automobile clock when used in an automobile.

In Figure 1 a battery **18** is connected by a conductor **20** to a variable resistor **22**. The resistor **22** is connected by a conductor **24** to a vibrator **26**. This member is supported at **28** and may be pivoted or formed of yielding or spring material. In the particular embodiment shown, it is held at **28** by a clamp so as to be vertically adjustable therein, thus varying its overall vibrating length.

The vibrator carries, as shown in Figure 1, two contacts **30** and **32** which are mounted, as shown, respectively, on spring supports **34** and **36**. Contacts **38** and **40** are provided adjacent contacts **30** and **32** and may be adjustably mounted so as to vary the distance between the contacts.

A permanent magnet **42** is positioned, as shown in Figure 1, adjacent the vibrator. It is mounted on any suitable non-magnetic support so that the permanent magnet **42** induces a constant polarity into the vibrator **26**. It should be understood that this polarity can be either north or south; however, it must be constant.



A conductor **44** extends across a conductor **46** and is connected at each end to condensers **48** and **50**. Each of these condensers is connected to one of the contacts **38** and **40**. Thus, the condenser **48** is connected by a conductor **52** with the contact **40** and the condenser **50** is connected by a conductor **54** with the contact **38**. The conductor **52** is connected to one end of the field coil **12** and the conductor **54** is connected to the other end of the field coil.

The conductor **46** leading from the battery **18** forms a center tap in the field coil **12**, thus dividing said coil into two coils **56** and **58**.

To start the clock, it is preferable to have a maximum current and for this purpose any conventional starting contacts may be used so as to shut out or by-pass the variable resistor **22**. As this structure is considered conventional, it has not been shown. In addition, a stopping mechanism may be desirable, which would consist of a switch to place all of the resistance of the resistor **22** into the circuit and the current would be reduced below the point required to operate the clock. This structure is also considered old and conventional and has not been alluded to in detail.

It has been found desirable to apply adjusting means to the vibrator **26**. This may take the form of an adjustable clamp **60**, as shown in Figure 3, which allows the vibrator to be moved up and down so as to extend varying lengths of the vibrator element below the pivot point or clamp. It should also be understood that the vibrator can easily be clamped permanently and have a movable weight mounted along its length in the form of a nut on a threaded member, the adjustment of the nut upwardly or downwardly thus changing the natural frequency of vibration of the vibrator. However, these features are both considered somewhat conventional and have not been described except in general terms. As shown in Figure 1, a pair of conductors **62** and **64** extend from the conductors **52** and **54** and lead to opposite sides of a vibrator coil **66** which has a U-shaped core **68**. The conductor **64** is provided with a variable resistance **70** which allows for regulation of the voltage across the vibrator coil **66**.

The use and operation of this modification are as follows:

The rotor **16** is caused to rotate by the alternating magnetic field set up in the poles on the field coil core **14** in a manner generally well known in the art. To do this it is necessary that an alternating field be induced by the field coil windings **12**, it being remembered that these windings **12** are composed of separate coils **56** and **58** which are divided by a center tap. This is done by utilizing the two windings **56** and **58** which are wound in the same direction on the core **14**, as each winding is energized alternately by the battery current through the vibrator **26** and its associated conductors. Assuming that the contacts **32** and **40** are closed, current flows from the battery **18** through conductor **46** through winding **56**, down conductor **52** to contacts **32** and **40** through conductor **24** and variable resistor **22** and back to the negative side of the battery. With current flowing through coil **56** in this manner, a north pole will be created in the right end of the core. Current flows through the vibrator coil **66** from the battery **18** through conductor **46**, through coil **58**, down conductor **54**, through conductor **64**, through variable resistor **70**, coil **66**, conductor **62**, contacts **32** and **40**, vibrator **26**, and variable resistor **22** back to the battery **18**. This current flowing through the vibrator coil **66** will create a south pole in the left side of the core **68**, which serves to repel the vibrator **26** as it has been polarized by the per-

manent magnet 42. When the contacts 30 and 38 are closed the magnetic field created in the vibrator core 68 will be reversed so that the north pole is on the right side. Again the polarized vibrator 26 will be repelled and the vibrator will continue in this vibrating motion as the magnetic field induced in the core 68 is continuously changing.

I have stated that the permanent magnet 42 induces a north pole in the vibrator 26; however, it should be understood that any constant polarity can be induced into the vibrator and the coil 66 around the core 68 connected between leads 62 and 64 in an appropriate manner so that the closing of either of the pairs of contacts will induce a repelling magnetic field in the end of the core 68 adjacent the vibrator 26.

In the modification shown in Figure 2, I have altered the structure somewhat in that the field coil 12 of the rotor with its center tap 46 has its core directly adjacent the vibrator so that the vibrator will be subjected to the alternating magnetic field set up by the rotor's field coil. The battery 18 is again connected through its variable resistance 22 to the center tap connector 46 and the vibrator 26. In other words, in this modification I eliminate the use of a separate vibrator coil, such as shown at 66 in Figure 1. Under certain conditions this can be extremely advantageous. However, the presence of a separate vibrator coil 66, with its variable resistor 70, allows for very accurate adjustment of the alternating magnetic field imposed on the vibrator 26 which has a constant polarity due to the presence of the permanent magnet 42.

The use and operation of this modification is substantially the same as that shown in Figure 1, except that the accurate adjustment obtained by the variable resistance 70 is no longer present. The alternating magnetic field imposed on the vibrator 26 causes it to oscillate back and forth between its contacts 38 and 40. In the modification of both Figures 1 and 2, the vibrator 26 will have a natural frequency of vibration and it is necessary to adjust it on its adjustable mounting, as shown in Figure 3, so that it will operate at 60 cycles, if the device is to be used in combination with a clock mechanism. If the vibrator were to be used with some other type of mechanism which did not require 60 cycles but could be operated successfully at any other desired frequency, the vibrator can be adjusted accordingly and, therefore, the invention is not limited to the application of the particular mechanism shown to a particular motor or to a motor designed to operate with current of a particular frequency. For example, a special clock mechanism could obviously be made to operate at any frequency. However, as the standard frequency is 60 cycles, I have described the device particularly with reference to such a frequency. It should also be understood that the vibrator and the circuits shown can be applied to a clock mechanism whether it be self-starting or manually started.

Each of the condensers 48 and 50, with its respective coil 56 or 58, forms a balanced or resonant circuit so that any sparking at the contacts 32 and 40 or 30 and 38 is drastically reduced, if not entirely eliminated, it being understood that the condensers and their coils are balanced. Thus, the life of the contact points on the vibrator are materially extended and I have found that several years is not an unexpected life for these contacts.

It should also be understood that when one of the pairs of contacts are closed the flux induced by one of the coils, either 56 or 58, carries through the other coil so as to produce a current therein. Thus the voltage existing between the leads 52 and 54 will be more than that produced by the battery 18. Assuming that the resistance of the variable resistance 22 has been reduced to zero, I have found that the voltage completely across the two resonance circuits, between leads 52 and 54, will be exactly twice that produced by the battery 18 and this added



voltage produces rather strong, positive action in the vibrator when it is reciprocating between contacts 38 and 40. In addition, this voltage may be closely regulated by the variable resistance 22 so that if a violent action is desired of the vibrator 26, the variable resistance 70 can be completely eliminated, thus placing twice the voltage of the battery 18 across the vibrator coil 66. On the other hand, if extremely quiet or delicate action is required of the vibrator 26, a substantial portion of the resistance 70 can be placed in the circuit so as to reduce the voltage substantially and thus diminish the voltage across the vibrator coil 66.

In Figure 2 control is exercised by adjustment of the variable resistor 22 and the vibrator 26 is subjected to the alternating magnetic field set up by the field coil 12 of the rotor. Figure 1 differs from Figure 2 in that a separate coil is provided for actuating the vibrator, this being coil 66, which is connected in parallel with the coil windings 12. In both modifications the vibrator 26 gains a constant polarity from the permanent magnet 42 and each of the coils 56 and 58 of the rotor field coil 12 forms a balanced resonant circuit with its respective condenser 48 or 50.

In Figure 2, as both resonant circuits are balanced the contacts 32 and 40 and 30 and 38 will have no sparking. In Figure 1, a reactive current will be produced by the vibrator coil 66; however, no sparking will take place across either of the pairs of contacts as this coil is shorted, so to speak, through the rotor coil 12.

In addition, in Figure 1, regulation of the variable resistor 70 will change the voltage and current across the vibrator coil 66 so that the amplitude of vibration of the vibrator can be changed, thus the variable resistor 70 can be used to regulate the frequency; the greater the amplitude of the vibrator 26 the slower the frequency and vice versa. It should be noted that approximately the same result can be derived by regulation of the variable resistor 22 in Figure 2.

It should also be understood that each of the condensers 48 and 50 are variable so that they may be tuned with the coils 56 and 58, respectively. This, in effect, forms a tuned, resonant circuit, more commonly termed a tank circuit.

I claim:

1. In an electric clock circuit, a vibrator for converting current from a direct current source to an alternating magnetic field for driving the rotor of the clock, a base, a vibrator mounted on the base with a pair of contacts, the vibrator having a predetermined natural frequency of vibration, means for inducing a constant polarity in the vibrator, a pair of electric circuits adapted to be connected to the source of direct current, each such circuit including the vibrator and one of its contacts, each circuit having a coil, each coil having a capacitance in parallel with it adapted to form therewith a balanced resonant circuit, the inductance of the coil and the value of the capacitance being balanced so as to produce anti-resonance at the predetermined frequency of the vibrator, the constantly polarized vibrator being positioned so as to subject it to the alternating magnetic field set up by the circuits so as to be alternately attracted and repelled thereby, and a center tap connecting the coils to their capacitances, the center tap being adapted to be connected to the source of direct current.

2. The structure of claim 1 in which the constant polarized vibrator is positioned in the alternating field produced by the coils.

3. The structure of claim 1 in which the circuits include a vibrator coil in parallel with the capacitances and the first mentioned coils, the constantly polarized vibrator being positioned so as to be subjected to the field set up by the vibrator coil.

(References on following page)

5

**References Cited** in the file of this patent

UNITED STATES PATENTS

| | | |
|---|---|---|
| 1,296,269 | Crawford | Mar. 4, 1919 |
| 2,094,481 | Warren | Sept. 28, 1937 |
| 2,237,003 | Kiltie | Apr. 1, 1941 |

6

FOREIGN PATENTS

| | | |
|---|---|---|
| 207,855 | Germany | Mar. 4, 1909 |
| 211,302 | Germany | June 22, 1909 |
| 682,814 | Germany | Oct. 23, 1939 |
| 498,986 | Great Britain | Jan. 17, 1939 |
| 616,669 | Great Britain | Jan. 25, 1949 |