No. 713,962. Patented Nov. 18, 1902.

J. CHRISTIE.

SPACING TABLE FOR PUNCHING MACHINES.

(Application filed Nov. 21, 1901.)

(No Model.) 4 Sheets—Sheet 1.

FIG. 1.

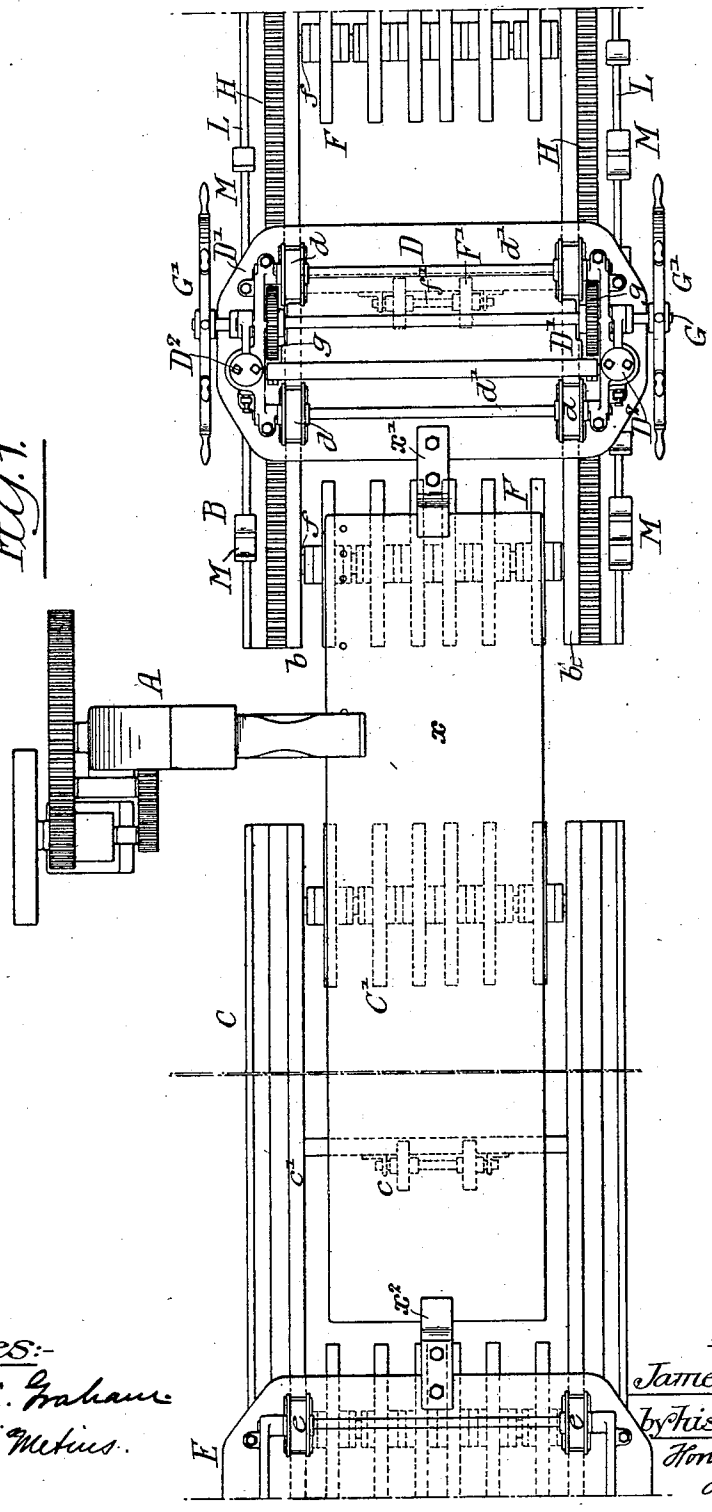

Witnesses:-
Frank L. A. Graham.
Herman E. Metius.

Inventor:
James Christie,
by his Attorneys:
Howson & Howson

THE NORRIS PETERS CO., PHOTO-LITHO., WASHINGTON, D. C.

No. 713,962. Patented Nov. 18, 1902.

J. CHRISTIE.

SPACING TABLE FOR PUNCHING MACHINES.

(Application filed Nov. 21, 1901.)

(No Model.) 4 Sheets—Sheet 2.

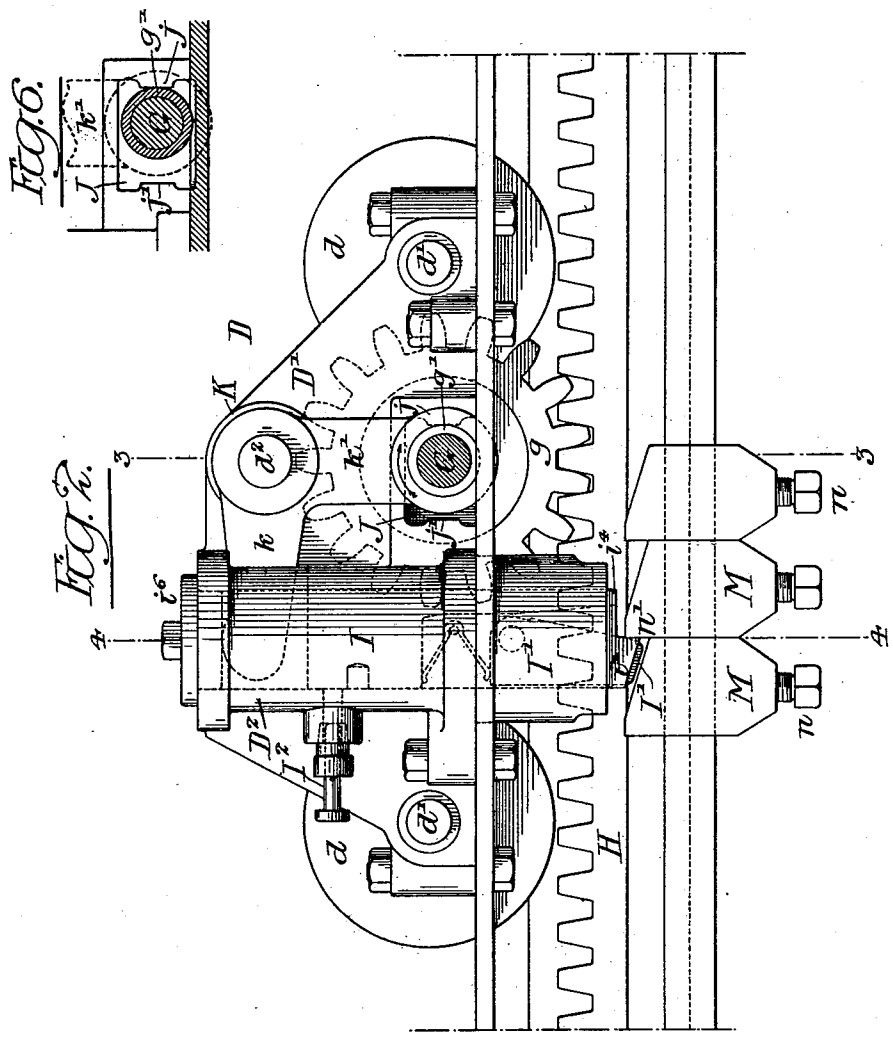

Fig. 6.

Fig. 7.

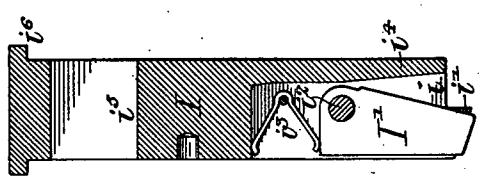

Fig. 5.

Witnesses:-
Frank L. A. Graham
Herman E. Metius.

Inventor:-
James Christie,
by his Attorneys:
Hanson & Hanson

THE NORRIS PETERS CO., PHOTO-LITHO., WASHINGTON, D. C.

No. 713,962. Patented Nov. 18, 1902.

J. CHRISTIE.

SPACING TABLE FOR PUNCHING MACHINES.

(Application filed Nov. 21, 1901.)

(No Model.) 4 Sheets—Sheet 3.

Fig. 3.

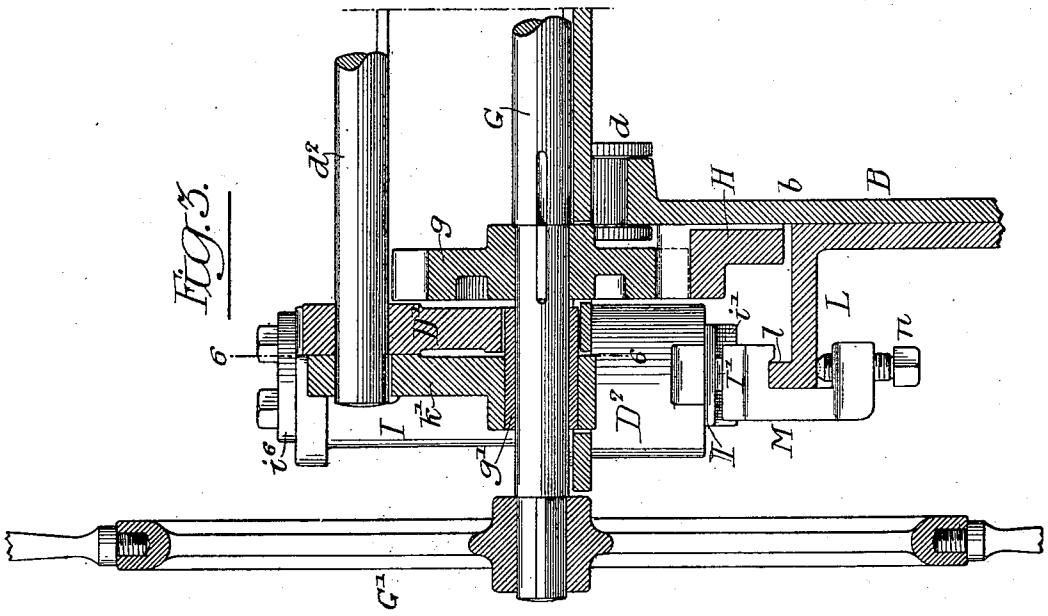

Fig. 4.

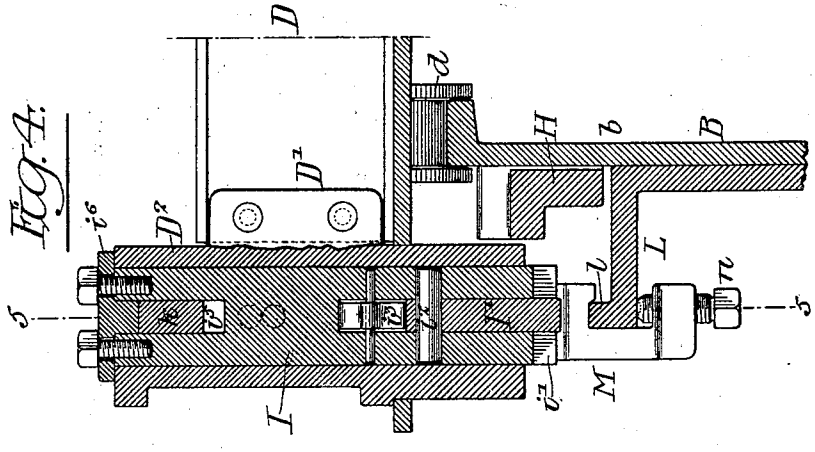

Witnesses:-
Frank L.A. Graham
Herman E. Mellies.

Inventor:-
James Christie,
by his Attorneys:
Munn & Munn

THE NORRIS PETERS CO., PHOTO-LITHO., WASHINGTON, D. C.

No. 713,962. Patented Nov. 18, 1902.

J. CHRISTIE.

SPACING TABLE FOR PUNCHING MACHINES.

(Application filed Nov. 21, 1901.)

(No Model.) 4 Sheets—Sheet 4.

Fig. 7.

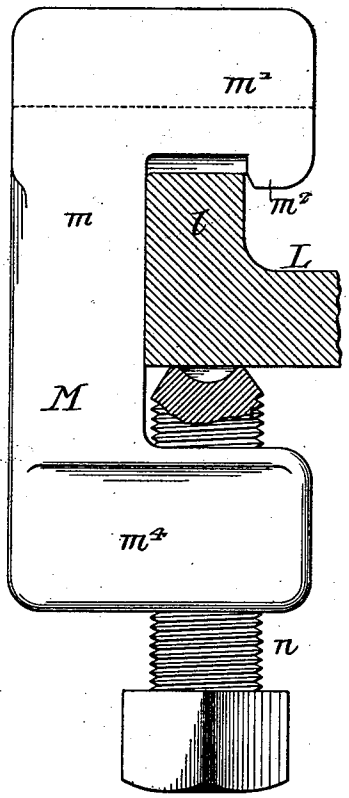

Fig. 8.

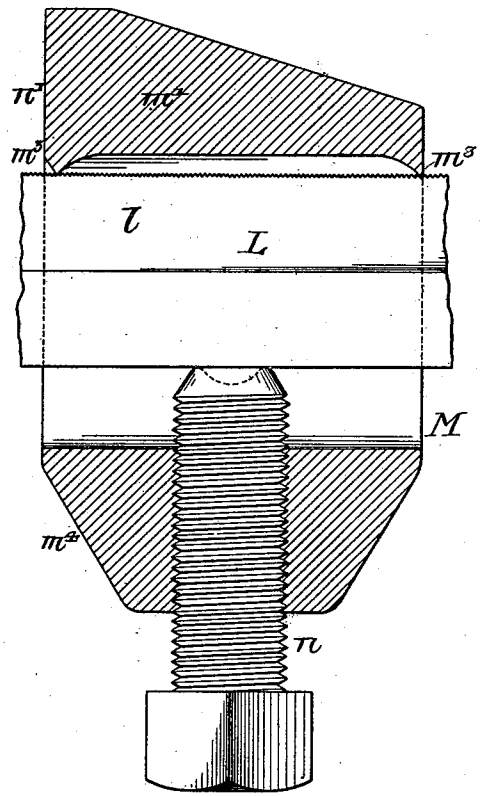

Witnesses:-
Frank L. A. Graham.
Herman E. Metius.

Inventor:-
James Christie
by his Attorneys
Howson & Howson

THE NORRIS PETERS CO., PHOTO-LITHO., WASHINGTON, D. C.

UNITED STATES PATENT OFFICE.

JAMES CHRISTIE, OF PHILADELPHIA, PENNSYLVANIA.

SPACING-TABLE FOR PUNCHING-MACHINES.

SPECIFICATION forming part of Letters Patent No. 713,962, dated November 18, 1902.

Application filed November 21, 1901. Serial No. 83,149. (No model.)

To all whom it may concern:

Be it known that I, JAMES CHRISTIE, a citizen of the United States, and a resident of Philadelphia, Pennsylvania, have invented certain Improvements in Spacing-Tables for Punching-Machines, of which the following is a specification.

My invention relates to certain improvements in spacing devices used in connection with metal-punching machines.

The object of my invention is to provide means whereby the movable carriage can be operated and locked by the movement of a single hand wheel or lever and also to provide means for the ready and accurate spacing of the stop-blocks.

My invention still further relates to the details of construction of the stop-blocks.

In the accompanying drawings, Figure 1 is a plan view of sufficient of the tables of a metal-punching machine to illustrate my invention. Fig. 2 is a side view of one of the carriages. Fig. 3 is a section on the line 3 3, Fig. 2. Fig. 4 is a section on the line 4 4, Fig. 2. Fig. 5 is a sectional view of the bolt on the line 5 5, Fig. 4. Fig. 6 is a section on the line 6 6, Fig. 3; and Figs. 7 and 8 are detail views of the spacing-dogs.

A is a punching-machine of any of the ordinary forms. This punching-machine extends between two tables B and C. Arranged to travel on the table B is a carriage D, and arranged to travel on the table C is a carriage E.

The table B has two rails b at each side on which the wheels d of the carriage D travel, and extending from one rail to the other are fixed shafts f, on which are loosely mounted a series of supporting-disks F, upon which the plate rests, and between the large disks F are supporting-wheels F′, mounted on axles f', carried by cross-bars on the table. These wheels aid the disks F to support the plate.

On the table C are disks C′ and wheels c, being duplicates of the disks F and wheels F′ of the table B, and are also for the purpose of supporting the plate.

On the carriage E are two shafts, on which are the wheels e, which travel on tracks c' of the table C. The plate x to be punched is mounted on the tables B and C between the two carriages D and E, and on the carriage D is a clamp x', and on the carriage E is a clamp x^2. These clamps secure the plate rigidly to the carriages.

The carriage D is the one which is operated, while the carriage E is simply used for the purpose of keeping tension on the plate. The wheels d of the carriage D are mounted on axles d', having their bearings in the side frames D′ of the carriage, and these wheels are preferably double-flanged, so as to accurately guide the plate.

G is the driving-shaft, having a hand-wheel G′ at each side of the carriage D, so that the shaft can be operated from either side of the table. Fixed to this shaft at each side is a pinion g. Each pinion meshes with a rack H, secured to the table, as shown in Fig. 3. On turning one of the hand-wheels G′ the carriage D can be moved longitudinally on the table B.

In order to lock the carriage in the adjusted position, so that the punching-machine will accurately punch the plate, I provide a bolt I, preferably at each side, mounted in the casing D^2, forming part of the side frames D′ of the carriage D. This bolt is shaped as clearly shown in Fig. 5, having a flat surface i and a tooth i' extending below the flat surface. The tooth is beveled at the back.

Mounted within the bolt I is a pawl I′, pivoted at i^2. This pawl extends below the tooth i', as clearly shown in Fig. 2. A spring i^3 tends to force the pawl I′ out against the front i^4 of the recess in which the pawl is mounted. The object of this construction will be described hereinafter. Secured to the upper end of the bolt I is a flanged cap i^6, and in the bolt under the cap is a slot i^5, into which projects one arm k of the lever K. This lever K is pivoted to a stud or shaft d^2, mounted on the side frames D′ of the carriage. The arm k' of this lever extends down, preferably, at right angles to the lever k and carries the bearing g' for the shaft G.

Each side frame D′ is slotted at J, Figs. 2 and 6, and on each end of the slot are stops $j\,j'$, against which the bearing g' of the shaft G rests. It will be noticed that the bearing is considerably less in diameter than the distance between the stops $j\,j'$. Consequently when the shaft is turned in one direction there will be a certain amount of lost motion

before the carriage is moved, as the bearing will swing from one stop to the other. This swinging motion of the arm k' of the lever K will cause a corresponding motion to the lever k. This motion will lift the bolt I free of a dog or stop M, described hereinafter, the object being to release the lock before the carriage can be moved and to immediately lock the carriage as soon as the adjustment is completed.

In order to hold the bolt I in its elevated position, I provide a latch I^2, which is mounted in the casing D^2 and enters a notch in the bolt, so that the bolt can be elevated clear of the dogs M.

On each side of the table B is a rail L, having a flange l at its outer end, preferably serrated or roughened on its upper surface, as shown clearly in Fig. 8. Mounted on these rails are the dogs or stops M. These dogs can be adjusted to any position desired, according to the distance apart of the holes to be punched in the plate. I provide dogs and rails on each side of the bed, so that when it is desired to punch the holes close together the dogs can be staggered, some of the dogs being on one side of the table and the others on the opposite side. By this arrangement, too, I am enabled to make the dogs heavier and much more rigid than if a single rail is used. The dogs M are clearly shown in detail in Figs. 7 and 8. Each dog is shaped with a body portion m and an overhanging head m', which rests above the rail, and this head has a flange m^2, which extends over the edge of the rail, as shown.

It will be noticed in referring to Fig. 8 that the under portion of the head of the dog is cut out at the center, forming two comparatively sharp edges m^3, which engage the serrations in the edge of the rail L, so as to prevent longitudinal movement of the dogs when once adjusted. Each dog is held in position by a clamp-screw n, which passes through a threaded orifice in the portion m^4 of the dog. This clamp-screw can be forced against the under side of the rail, as clearly shown in the drawings, and it will be noticed in referring to Fig. 8 that the clamp-screw is midway between the two upper bearing-points of the dog, so that when the screw is adjusted the dog is held at three points, making a rigid fastening. The upper edge of each dog has a bearing-surface n' and is tapered at the back, so as to expose the bearing-surface of the adjoining dog. These dogs, as remarked above, may be set so that the bearing-surface of one dog on one side can be midway between the bearing-surfaces of two dogs on the opposite side. If it is desired to punch the holes closer together than the width of the dog, then the adjustment is made by dogs on the two sides of the table, as will be readily understood.

It will be seen that the dogs can be set on the rails L at any point desired, according to the number of holes to be punched and the distance apart desired, and all the operator will have to do is to turn the single shaft which actuates both the bolts for locking and unlocking the carriage and the means for moving the carriage.

The operation of the machine is as follows: If a plate is to be punched at intervals—such, for instance, as a plate used in structural ironwork where the holes are irregular—the dogs M are set at the intervals desired on the rails L. The plate is then placed in position between the two carriages D and E and clamped to each carriage. The carriage is adjusted so that one end of the first hole to be punched will be directly under the punch, and one of the bolts I will rest back of the first dog. After the punch has punched the hole the hand-wheel is turned so as to turn the shaft G in the direction of the arrow, Fig. 2. This movement would cause the carriage to move forward if the bolt did not engage the dog, so that instead of the carriage moving it acts as the fulcrum for the lever K, which swings within the slot J until the bearing J' strikes the stop j'. This movement of the lever lifts the bolt I clear of the dogs with which it engaged, and as the bolt is lifted the spring-pawl I' is released, and this pawl will swing over in contact with the surface i^4 of the bolt and will rest in front of the tooth i' of the bolt and directly above the dog M. Thus the bolt is held free from engagement with the dog, so that as the turning of the shaft G is continued the pinion g will engage the rack H and will travel thereon, moving the carriage forward. As the carriage moves forward the pawl I' will strike the bearing-surface of the next dog and will be moved back against the pressure of the spring by the forward movement of the carriage. This movement will allow the bolt to drop, and its tooth i' will strike against the bearing-face of the dog, so that the carriage will be brought to a stop at the proper point. Then the punch can punch a second hole in the plate. This operation can be continued until the plate is punched with the desired number of holes spaced the proper distance apart.

Heretofore in machines of this character it required two or more levers to operate and lock the carriage. Consequently mistakes often occurred, owing to the multiplicity of levers or wheels, whereas by my improved mechanism a single wheel or lever is all that is necessary.

It will be understood that in some classes of machinery a single rack may be used on one side of the machine and a single rail for the dogs may only be necessary; but I prefer to provide the machine with racks and rails on each side, as shown.

I claim as my invention—

1. The combination in a spacing-table for punching-machines, of a table, a rack thereon, a rail, stops on the table, a carriage, a shaft on the carriage, a pinion on the shaft engaging the rack, a lever from which the shaft is

hung from the carriage, and a bolt arranged to engage the stops and to be actuated by the lever so that on the turning of the shaft the bolt is freed from the stops and the carriage moved through the pinion and rack, substantially as described.

2. The combination of a table, a rack and stops on the table, a carriage arranged to travel on the table, a pinion engaging the rack, a lever pivoted to the carriage and carrying a bearing for the shaft of the pinion, said bearing mounted between two stops on the carriage, and a bolt arranged to engage the stops on the table, the lever actuating said bolt so that when the pinion is turned in one direction the lever will swing against a stop on the carriage, so that the bolt will be drawn before the carriage is moved, substantially as described.

3. The combination of a table, a rack on the table, a rail, stops on the rail, a carriage, a bolt on the carriage engaging a dog, a lever for drawing the bolt, a shaft carried by said lever, the pinion on the shaft engaging the rack on the table, stops to limit the swing of the lever, and a pawl pivoted to the bolt and arranged to swing in front of the tooth of the bolt when the bolt is elevated so as to allow the carriage to move forward before the bolt drops back in position, substantially as described.

4. The combination of a table, a rack on the table, a rail, adjustable dogs on the rail, said dogs having a bearing-face in front and beveled at the back, a carriage having a toothed bolt resting against the bearing-face of the dogs, a spring-pawl carried by the bolt and arranged to swing in front of the tooth of the bolt, a lever having two arms, one arm engaging the bolt, the other arm carrying a bearing, a shaft mounted in said bearing, and a pinion on said shaft meshing with the rack, stops on the carriage to limit the movement of the lever so that when the said shaft is turned the bolt is first drawn and then the carriage is moved through the medium of the pinion and rack, substantially as described.

5. The combination of a table, rails thereon, racks at each side of the table, rails beyond the racks, adjustable dogs secured to the racks, a carriage having wheels arranged to travel on the table, two two-armed levers, one pivoted to one side of the carriage and the other to the opposite side, a shaft mounted in one arm of each lever, a bolt engaged by the other arm of each lever, said bolts being in line with the adjustable dogs on the table, the said levers being arranged to swing between two stops on the carriage so as to release the bolts before the carriage is moved, substantially as described.

6. The combination in a spacing-machine, of a table, a carriage, a rail, a dog secured to the rail to be engaged by the carriage, said dog having a bearing-face and beveled at the back and having sharp edges on the under side of the head engaging the rack, and a clamp-screw for securing the dog to the rail, substantially as described.

7. The combination in a spacing-machine, of a table, a carriage mounted thereon, means for moving the carriage on the table, a rail, dogs adjustably mounted on the rail to be engaged by the carriage, the under side of the head of each dog having sharp edges at each end, a clamp-screw mounted on the lower portion of the dog and resting against the under side of the rail, the upper side of the rail being serrated, substantially as described.

In testimony whereof I have signed my name to this specification in the presence of two subscribing witnesses.

JAMES CHRISTIE.

Witnesses:
ALFRED HOLDEN,
JOHN C. YOUNG.