204. CHEMISTRY, ELECTRICAL & WAVE ENERGY.
226
DRAFTSMAN.

No. 872,063. PATENTED NOV. 26, 1907.

H. L. HOLLIS.

SUPPORTING AND CONVEYING APPARATUS.

APPLICATION FILED MAY 22, 1906.

2 SHEETS—SHEET 1.

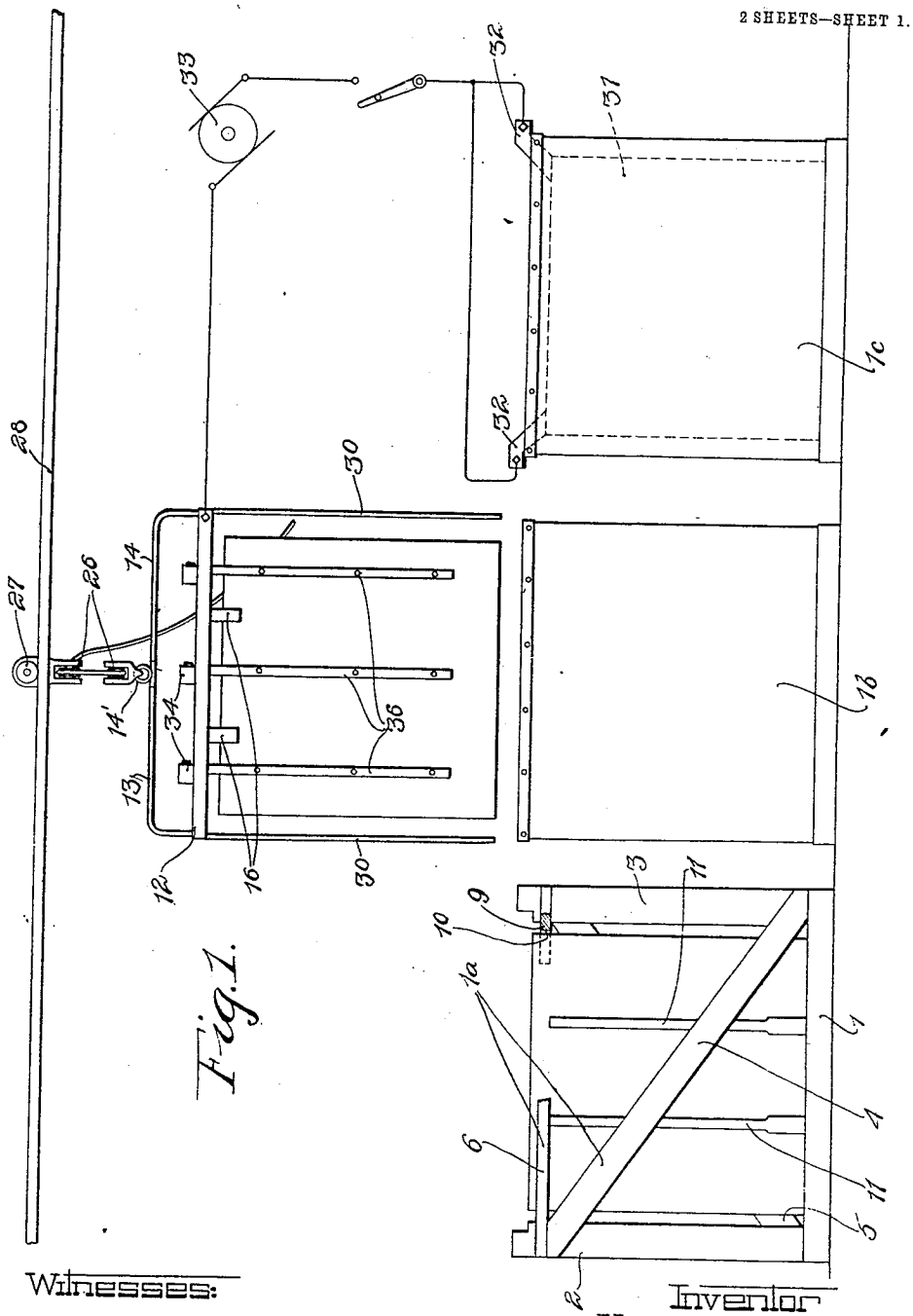


Fig. 1.

Witnesses:
Arthur H. Boettcher.
Charles J. Schmidt

Inventor
Henry L. Hollis
By Charles A. Brown
Attorney.

THE NORRIS PETERS CO., WASHINGTON, D. C.

204. CHEMISTRY, ELECTRICAL & WAVE ENERGY.
226
Search Room

No. 872,063. PATENTED NOV. 26, 1907.

# H. L. HOLLIS.

## SUPPORTING AND CONVEYING APPARATUS.

APPLICATION FILED MAY 22, 1906.

2 SHEETS—SHEET 2.

Fig. 4.

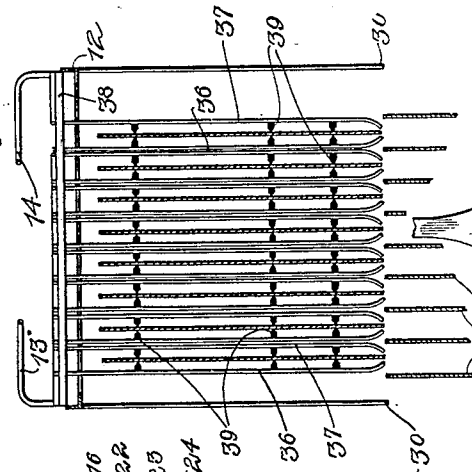

Fig. 6.

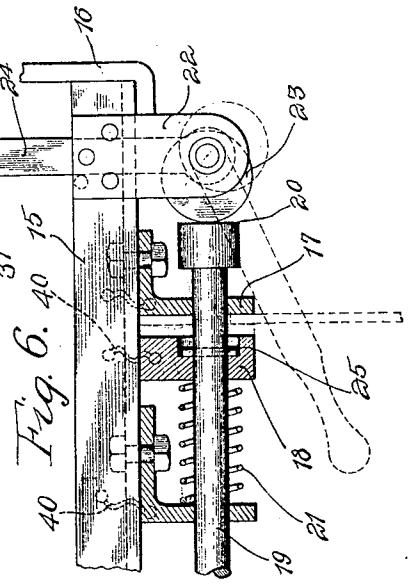

Fig. 3.

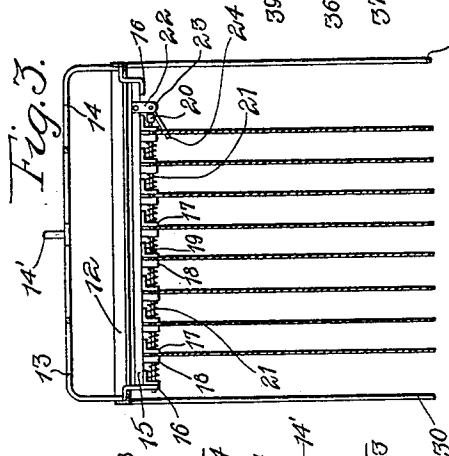

Fig. 2.

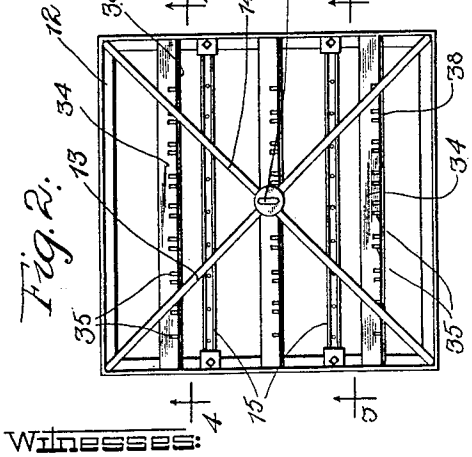

Fig. 5.

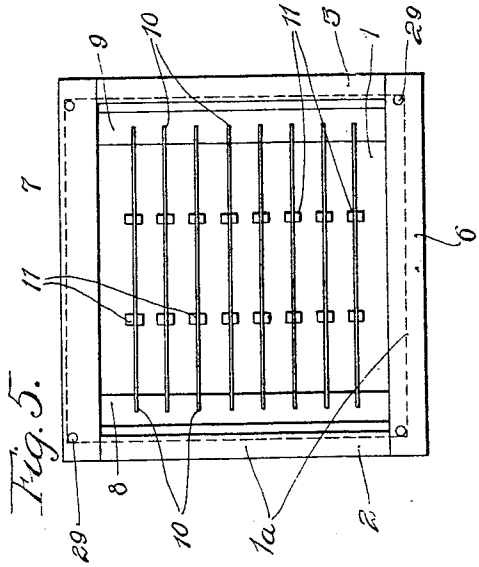

Witnesses:
Arthur H. Boettcher
Charles J. Schmidt

Inventor
Henry L. Hollis
By Charles A. Brown
Attorney

THE NORRIS PETERS CO., WASHINGTON, D. C.

# UNITED STATES PATENT OFFICE.

HENRY L. HOLLIS, OF CHICAGO, ILLINOIS.

## SUPPORTING AND CONVEYING APPARATUS.

No. 872,063. Specification of Letters Patent. Patented Nov. 26, 1907.

Application filed May 22, 1906. Serial No. 318,174.

*To all whom it may concern:*

Be it known that I, HENRY L. HOLLIS, a citizen of the United States, residing at Chicago, in the county of Cook and State of Illinois, have invented a certain new and useful Improvement in Supporting and Conveying Apparatus, of which the following is a full, clear, concise, and exact description, reference being had to the accompanying drawings, forming a part of this specification.

My invention relates to supporting and conveying mechanism for use in electrolytic work for conveying plates to be treated from one position to another.

In my copending application, Serial No. 318,173, filed May 22, 1906, I have described a process for electrolytically tin-plating iron sheets, and my present invention is of particular adaptability for holding the plates to be treated in proper arrangement and for conveying them to and from the electrolytic tank. A number of the plates to be treated is first stacked in a rack frame and then a gripping frame forming part of the conveying apparatus is brought into position over the plates and clamping means brought into clamping engagement with the individual plates, whereupon the gripping rack with the supporting plates is raised by suitable tackle mechanism and conveyed on a trackway to a position above the electrolytic tank whereupon the plates to be treated may be lowered in proper position with respect to the other plates in the tank. Supporting and guiding means are also provided on the gripping frame which engage about the plates to be treated to hold them in proper spacing when removed from the rack and when inserted into position between the other plates in the plating tank.

My invention will be best understood when described with reference to the accompanying drawings, in which

Figure 1 is a view showing the rack frame and intermediate tank and the plating tank with the gripping frame supported from the trackway. Fig. 2 is a top view of the gripping frame. Fig. 3 is a sectional view taken on line 3—3 of Fig. 2, the separator frames being omitted. Fig. 4 is a sectional view taken on line 4—4 of Fig. 2, showing the disposition of the separator frames with respect to the plates to be treated. Fig. 5 is a top view of the assembling rack, and Fig. 6 is an enlarged detail view of the clamping arrangement and the releasing mechanism therefor.

The assembling rack $1^a$ comprises the base 1, the side walls 2 and 3 and the diagonal supporting pieces 4 and 5 and the transverse top end pieces 6 and 7. Supported at the tops of the sides and extending inwardly are the shelves 8 and 9 provided with equally spaced slots 10—10 of sufficient width to receive the iron sheets to be treated. Extending upwardly from the base are also the guide rod pairs 11—11, the interstices between the guide rods being in alinement with the slots in the shelves. The rack may be constructed for the reception of any number of sheets which are stacked in a vertical row as shown in Fig. 5.

The gripping frame has a rectangular top frame 12 which may be of angle iron as shown, and extending upwardly from the corners thereof and diagonally across this frame are the rods 13 and 14 at whose intersection is secured an eye or hook 14′. Extending transversely across the frame are a plurality of clamp supporting frames 15, which frames may be U rods supported from hooks or hangers 16 engaging the angle iron. To the underside of these clamping frames are a plurality of clamping mechanisms, each comprising a stationary jaw member 17 and a movable jaw member 18. Extending through all the jaw members is a releasing rod 19 having at its end a head 20. Encircling the rod are a plurality of springs 21, there being a spring between each movable jaw member and the adjacent stationary member, the tendency of the springs being to force the movable jaw member against the next adjacent stationary member. Supported from the clamping frame adjacent the head 20 is a bearing frame 22 in whose lower end is pivoted the cam 23 from which extends the actuating arm 24. Extending through the releasing rod are a plurality of pins 25, each engaging with one of the movable clamping jaws.

Normally the actuating levers are in their upper position and the cam in position to hold the rod to one side whereby the movable jaws are held away from the stationary jaw members. The spacing of the jaw openings on the gripping rods is equal to that of the sheets in the assembling rod, and when the gripping structure is placed in proper position over the rack the top edges of the sheets therein will engage in the jaw openings and upon turning of the levers to release the rods the springs 21 become effective to close the

Search Room

jaws together and the sheets will be securely gripped in the jaws, even though the sheets are not of uniform thickness. As there is considerable weight to the gripping structure tackle mechanism and trackways are preferably provided for transporting this structure from one place to another, and in Fig. 1 is shown tackle mechanism 26 whose one pulley block may hook into the supporting ring at the top of the gripping structure and whose other pulley is provided with the wheel 27 for engaging the trackway 28.

At the corners of the rack frame are the openings 29 into which pass the guide rods 30 extending downwardly from the angle bar frame of the gripping structure, and when by means of the tackle mechanism and track way the gripping structure is brought into position over the rack the guide rods pass into the guide openings, whereupon the open jaws will be in position to receive the upper edges of the plates, and when the levers are then actuated the jaws will firmly close over the plates, and when the gripping structure is again removed from the assembly rack the plates will be carried therewith. The gripping structure with the plates may then be conveyed and dipped into intermediate tanks $1^b$ or may be conveyed directly to the electrolytic plating tank $1^c$, this plating tank, as shown in the copending application referred to, having suspended therein a plurality of plates 31 which are spaced as shown in Fig. 4, each plate having also a terminal lug 32, which lugs are all adapted for connection with one terminal of a source of current 33. The plates to be treated, as stated in said copending application, should be disposed between the plates 31, but care must be taken that they be guided properly into position without undue contact therewith, and for this purpose separating and guiding mechanism is provided, as best shown in Figs. 1, 2 and particularly Fig. 4.

Extending across the angle iron frame of the gripping structure are the blocks or bars 34 which in their sides are provided with slots or grooves 35—35, and in said grooves are inserted the upper ends of bars or guide rods 36 and 37, these rods being further held in place by side straps 38 secured to the blocks 34. Extending inwardly from each pair of rods are the insulating studs 39, which are in such position that the plates in the assembly rack pass between them when the gripping structure is lowered, one of the plates passing upwardly between each pair of guide rods and between the insulating studs thereon and the plates are then held midway between the guide rods of the pairs. The distance between the outer faces of the guide rod pairs is equal to the distance between the plates in the plating tank, and the lower ends of the rods of each pair are slightly turned inwardly, as shown in Fig. 4, so that when the gripping structure is brought into position over the plating tank the rods of each pair will be properly guided between the plates 31 in the tank, and the plates to be treated held within the pairs will assume a middle position between the plates in the tank. The other terminal of the supply source is connected with the angle bar frame of the gripping structure, as shown in Fig. 1, and the current from this terminal is led through the gripping frames to the jaw members and plates supported thereby, wire connectors 40 extending between the gripping frames and the jaw members to insure good electrical passageway for the current to the plates. The supporting blocks 34, however, are of insulating material such as wood, whereby to prevent current flow to the guide rods 36 and 37, or these rods may be insulated in some other manner from the supporting blocks. The insulating studs 39 also prevent current flow to these guiding rods from the plates to be treated, and therefore the current flow between the terminals on the plates 31 and the plates to be treated must be through the electrolyte, the plating metal, of course, being suitably connected in circuit, for instance, as shown in the copending application referred to.

With this improved assembling, supporting and conveying apparatus sheets of metal can be quickly and readily manipulated, the plates to be treated being first stacked in the assembling rack, as before described, whereupon the gripping structure with the separating frames lowered thereon and the plates clamped by the clamping jaws, whereupon by means of the tackle mechanism and trackway the suspended plates may be raised with the gripping structure and easily conveyed and dipped into intermediary tanks and finally dipped into the plating tank, there being always assurance that the parts are in proper position and that short circuits will not occur.

I do not wish to be limited to the adaptation of my invention to supporting and conveying sheets to be treated according to the process outlined in the referred to application, as my invention will be readily adaptable for any other process where sheets are to be treated. The construction and arrangement of the various parts also may be readily changed without departing from the scope or spirit of my invention. I do not wish to be limited to the disclosure herein made.

What I claim as new, however, and desire to secure by Letters Patent is:

1. In mechanism of the class described, the combination with a supporting frame, of a plurality of gripping jaws thereon, individual means for each of said jaws for closing said jaws together, common means for con-

trolling the actuation of said jaws and conveying mechanism for conveying the clamping mechanism from one position to another.

2. In mechanism of the class described, the combination with a gripping structure, of a plurality of gripping frames thereon, individual clamping mechanisms supported from said clamping frames, conveying mechanism for conveying the clamping frames whereby said individual clamping mechanisms may be brought into position over a plurality of plates to be suspended, and common means for causing simultaneous actuation of the clamping mechanism to each engage and grasp one of said plates whereby upon further conveyance of the gripping structure said plates will be carried therewith.

3. In mechanism of the class described, the combination with a gripping structure, of conveying mechanism for conveying said structure from one position to another, individual clamping mechanisms supported from said structure, and common means for simultaneously opening and for closing said clamping mechanisms whereby objects may be clamped therein to be conveyed with the structure and to be released therefrom.

4. In mechanism of the class described, the combination with a frame, of a plurality of clamping mechanisms supported therefrom, means for normally holding said clamping mechanisms in an open condition whereby they may receive objects to be supported, and common means adapted upon actuation to simultaneously close all the clamping mechanisms whereby the objects are clamped.

5. In combination, an assembly rack adapted to receive and to hold a plurality of plates, a frame, conveying mechanism for conveying said frame from one position to another, clamping mechanisms supported from said frame and spaced in accordance with the spacing of the plates in the rack, common means for simultaneously opening the clamping mechanisms when brought into position over the plates, and means for closing the clamping mechanisms after the plates have been received thereby.

6. In combination, an assembly rack adapted to receive and to hold a plurality of plates, a frame, conveying mechanism for conveying said frame from one position to another, clamping mechanisms supported from said frame and spaced in accordance with the spacing of the plates in the rack, means adapted in one position to hold the clamping mechanisms open whereby they may receive the plates and adapted when brought into another position to allow closure of the clamping mechanisms to clamp the plates received thereby whereby upon moving of the frame said plates will be carried therewith.

7. In combination, a rack adapted for receiving and supporting metallic plates, of a frame, conveying mechanism for conveying said frame from one position to another and for lowering and raising said frame, clamping mechanisms supported from said frame and spaced in accordance with the spacing of the plates in the rack, spring mechanism tending to close the clamping mechanisms, and means for normally preventing closure of the clamping mechanisms whereby said mechanisms may receive the plates when the frame is lowered over said plates, said means when released allowing actuation of the spring mechanisms to close the clamping mechanisms to securely hold the plates therein, whereby said plates will be carried with the frame upon further travel thereof.

8. In combination, an electrolytic bath in which are immersed a plurality of plates forming one electrode, of a supporting frame, means for suspending from said supporting frame a plurality of plates to be inserted between the plates in the bath and forming the other electrode, and guide rods disposed at each side of the plate in the frame to guide said plates between the plates in the bath, said guide rods being insulated from said plates.

9. In combination, an electrolytic bath in which are immersed plates forming one electrode, of a frame, clamping mechanisms on said frame for receiving and holding plates to be suspended between the plates and the bath, guide rods extending from said frame and disposed at each side of the plates suspended therefrom, conveying mechanism for conveying said frame to a position over the bath and for allowing said frame to be lowered, said guide rods causing the plates on the frame to be guided to assume an intermediary position between the various plates in the bath, said guide rods being insulated from the plates.

10. In combination, an electrolytic bath in which are immersed plates forming one electrode, of a frame, clamping mechanisms on said frame for receiving and holding plates to be suspended between the plates in the bath, guide rods extending from said frame and disposed at each side of the plates suspended therefrom, conveying mechanism for conveying said frame to a position over the bath and for allowing said frame to be lowered, said guide rods causing the plates on the frame to be guided to assume an intermediary position between the various plates in the bath, said guide rods being insulated from the plates, and common releasing means adapted upon actuation to simultaneously release the plates from the frame.

11. In mechanism of the class described, the combination with a plurality of gripping jaws, of common means for simultaneously opening said jaws, and individual spring

mechanism for each of said jaws for closing said jaws together.

12. In mechanism of the class described, the combination with a plurality of stationary jaws, of a movable jaw associated with each of said stationary jaws to form gripping means, common means for simultaneously separating said movable jaws from said stationary jaws, and individual spring mechanism tending to close said movable jaws and said stationary jaws together.

13. In mechanism of the class described, the combination with a main supporting frame, of a plurality of jaws secured to said frame, a movable jaw associated with each of said stationary jaws, spring mechanism for each pair of jaws tending to close the associated jaws together, and common releasing means for simultaneously opening all of said jaws.

14. In mechanism of the class described, the combination with a plurality of jaw members, of stationary jaw members, a movable jaw member associated with each of said stationary jaw members, spring mechanism for each of said movable jaw members tending to close said movable jaw members and their associated stationary jaw members together, and common means for simultaneously separating said movable jaw members from the associated stationary jaw members.

15. In mechanism of the class described, the combination with a plurality of stationary jaw members, of a movable jaw member associated with each of said stationary jaw members to form gripping means, spring mechanism tending to maintain engagement of said stationary and said movable jaw members, and releasing means acting in opposition to said spring mechanism for simultaneously separating said movable jaw members from their associated stationary members.

16. In mechanism of the class described, the combination with a main supporting frame, of a plurality of stationary jaw members secured to said frame, an actuating rod mounted in said stationary jaw members, a movable jaw member mounted on said rod and associated with each of said stationary members to form a gripping jaw spring mechanism tending to close said gripping jaws together, and means whereby said actuating rod may engage all said movable jaw members when actuated in opposition to said spring mechanism to simultaneously open all of said gripping jaws.

17. In mechanism of the class described, the combination with a main supporting frame, of a plurality of stationary jaw members disposed in alinement and secured to said frame, an actuating rod mounted in said stationary jaw members, a movable jaw member mounted on said rod and associated with each of said stationary jaw members to form gripping jaws, individual spring means for each of said movable jaws tending to close said gripping jaws, an engaging stud on said actuating rod for engaging said movable jaw member when said rod is actuated in opposition to said spring mechanism whereby said gripping jaws are opened, and cam mechanism for causing the actuation of said rod.

18. In mechanism of the class described, the combination with a main supporting frame, of a plurality of stationary jaw members disposed in alinement and secured to said frame, an actuating rod mounted in said stationary jaw members, a movable jaw member mounted on said rod and associated with each of said stationary jaw members to form gripping jaws, individual spring means for each of said movable jaws tending to close said gripping jaws, an engaging stud on said actuating rod for engaging said movable jaw member when said rod is actuated in opposition to said spring mechanism whereby said gripping jaws are opened, a pivoted cam engaging the end of said rod and adapted upon its rotation to actuate said rod, and a lever for said pivoted cam whereby said cam may be operated.

19. In combination, an electrolytic bath in which are immersed a plurality of plates forming one electrode, of a supporting frame, a plurality of gripping jaws, individual means for each of said gripping jaws for closing said jaws together, common means for simultaneously opening all of said gripping jaws, said gripping jaws being adapted to support a plurality of plates to be inserted between the plates in the bath and forming the other electrode, and guide rods disposed at each side of the plates in the frame to guide said plates between the plates in the bath, said guide rods being insulated from said plates.

In witness whereof, I hereunto subscribe my name this 12th day of May A. D., 1906.

HENRY L. HOLLIS.

Witnesses:
CHARLES J. SCHMIDT,
ARTHUR H. BOETTCHER.