US 20080131302A1

(19) **United States**

(12) **Patent Application Publication**

(10) **Pub. No.: US 2008/0131302 A1**

(43) **Pub. Date: Jun. 5, 2008**

**TANIGAWA**

(54) **OIL-FREE FLUID MACHINE HAVING TWO OR MORE ROTORS**

(75) Inventor: **Shiro TANIGAWA**, Tama-city (JP)

Correspondence Address:
**ROSSI, KIMMS & McDOWELL LLP.**
**P.O. BOX 826**
**ASHBURN, VA 20146-0826**

(73) Assignee: **ANEST IWATA CORPORATION**, Yokohama-shi (JP)

(21) Appl. No.: **11/946,183**

(22) Filed: **Nov. 28, 2007**

(30) **Foreign Application Priority Data**

Nov. 30, 2006 (JP) ..... JP2006-323961

**Publication Classification**

(51) **Int. Cl.**
*F01C 1/08* (2006.01)

(52) **U.S. Cl.** ..... **418/205**; 417/321

(57) **ABSTRACT**

An oil-free fluid machine unit is provided of which the fluid machine has two or more rotors and torque transmission between the rotors can be performed without a need of using lubrication oil thereby eliminating contamination induced by lubrication oil and without reduction of longevity of the synchronizing gears. The drive shaft **12** of the drive motor **11** is connected to the rotor shaft **14** of the fluid machine, synchronization gears **18** and **19** are attached to the rotor shafts **14** and **15** at the motor **11** side end of the rotor shafts respectively, and pulleys **16** and **17** are attached to the rotor shafts **14** and **15** at the other side ends respectively opposite to the motor **11** and a belt is looped over the pulleys so that the pulleys are rotated in counter direction to each other. At least one of the synchronization gears is made of plastic material. Thus, torque transmission between the rotors is done in two ways, via synchronization gear drive and belt drive.

Sectional View along line C-C

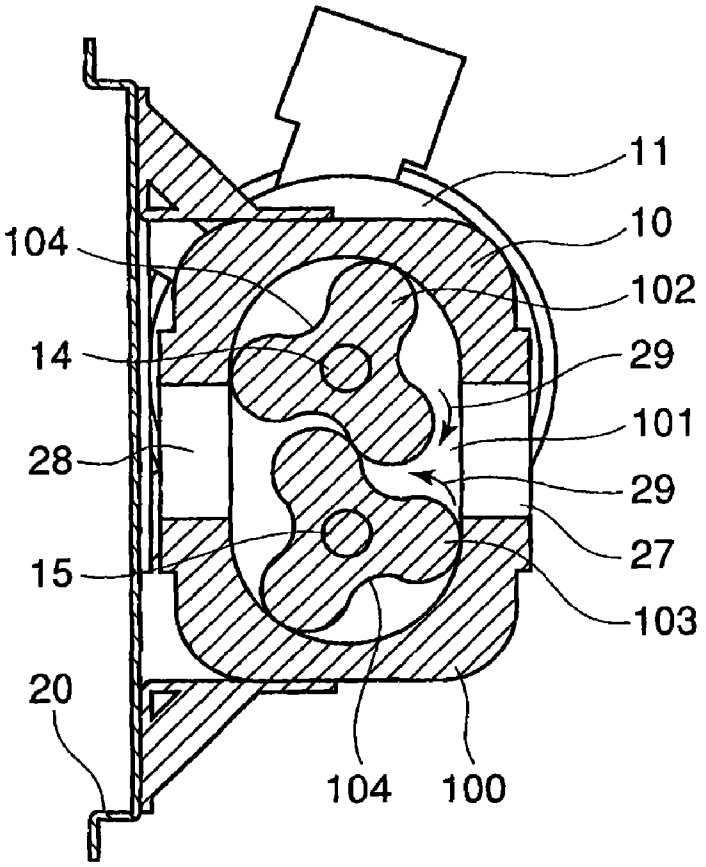

FIG. 1A

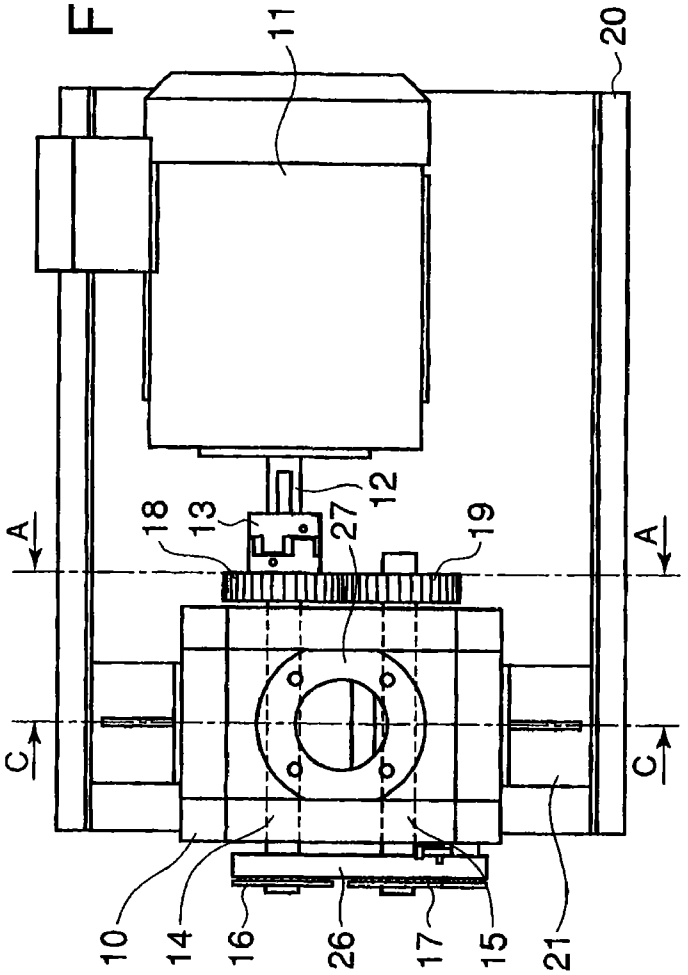


FIG. 1C

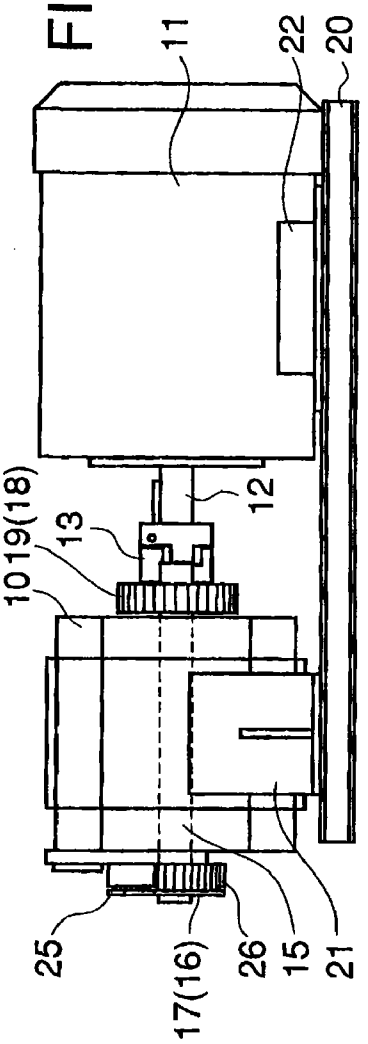


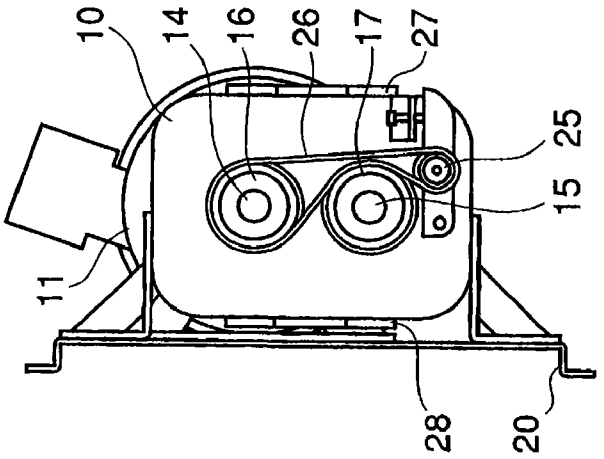


FIG. 1B

FIG. 2B

Sectional View along line C-C

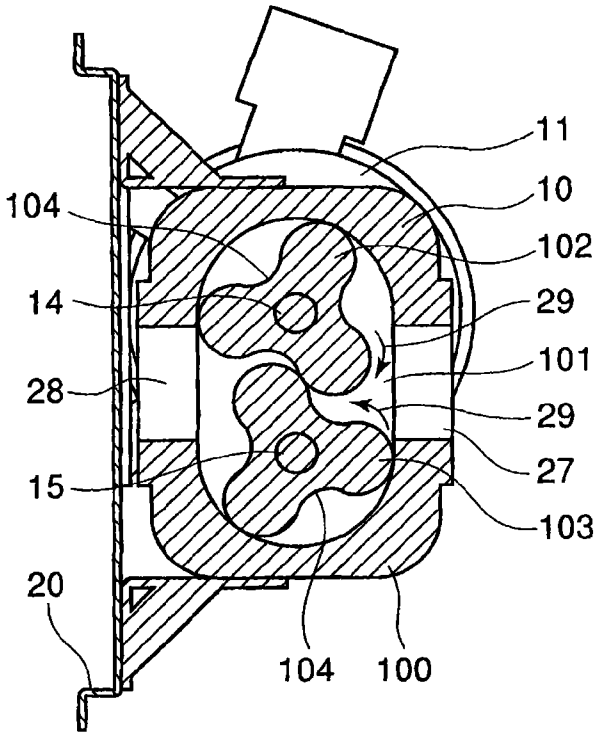


FIG. 2A

Sectional View along line A-A

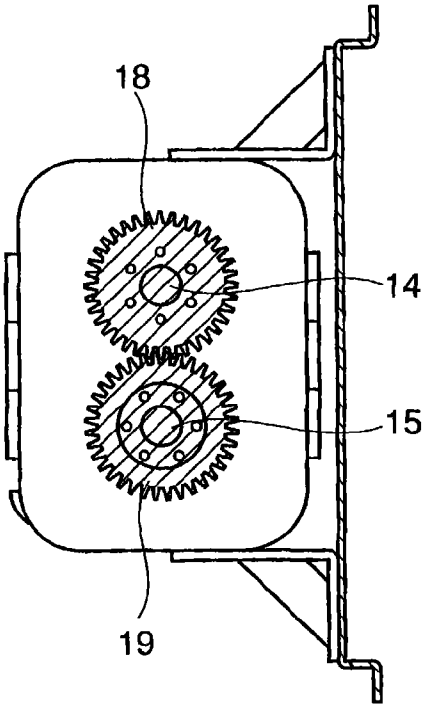

# OIL-FREE FLUID MACHINE HAVING TWO OR MORE ROTORS

## BACKGROUND OF THE INVENTION

**[0001]** 1. Field of the Invention

**[0002]** The present invention relates to oil-free fluid machines having two or more rotors, specifically to dry-sealed mechanical vacuum pumps such as Roots type, screw type, and claw type vacuum pumps having two or more rotors which are rotated in synchronism with one another to perform well-balanced torque transmission without a need for lubrication oil for lubricating the drive mechanism of the rotors thereby eliminating occurrence of oil contamination.

**[0003]** 2. Description of the Related Art

**[0004]** Fluid machines having two or more counter-rotating meshed lobed rotors accommodated in a rotor casing to expel air trapped in a space between the wall of the casing and the rotor surface by rotating the rotors in synchronization with one another are widely used as vacuum pumps such as roots vacuum pumps, claw vacuum pumps, and screw vacuum pumps.

**[0005]** In these dry mechanical vacuum pumps having two or more lobed rotors, synchronization gears made of metal is usually adapted to allow meshing lobed rotors to rotate in directions opposite to each other. The synchronization gears made of metal are needed to be lubricated with oil, grease, or a solid lubricant, etc. Further, noise occurs due to contact meshing of the synchronization gears.

**[0006]** Lubrication of the synchronization gears is performed with oil, grease, or a solid lubricant, etc. Oil lubrication deteriorates quality of vacuum. In a case of low rotation speed of the rotors, grease may be used, but refilling of grease is not easy. Solid lubricants are not adequate when the gears experience large loads. Grease is poor in friction heat removing performance, and solid lubricants can not remove friction heat.

**[0007]** In a case lubricating oil is reserved in a gear case and supplied to where needed when operating the vacuum pump, there are problems that oil leaks through oil seals of drive shafts of the rotors. Particularly, oil molecules leaked to the pump chamber defuse into the vessel to be evacuated and deteriorate quality of vacuum.

**[0008]** To deal with the problems, it is thinkable to use plastic gears or toothed belt (synchronous belt) in order to transmit driving force without lubrication. However, there is a disadvantage that large torque can not be transmitted, since the plastic gears and toothed belt are lower in strength as compared with metal gears, resulting in decreased operation life.

**[0009]** In Japanese Laid-Open Patent Application No. 6-185483 (Patent literature 1) is disclosed a dry mechanical vacuum pump of roots type, in which an annular magnet is attached to an end of the drive shaft of a drive motor and to an end of one of the rotary shaft respectively, and a partition member made of electrical insulating material is provided to run in the gap between the outer periphery and inner periphery of the annular magnets so that the pump body side where the annular magnet attached to the rotary shaft exists is separated from the outside of the pump body where the annular magnet attached to the drive shaft of the motor exists. Synchronization gears consisting of a metal gear and a plastic gear for allowing the two rotors to rotate in direction opposite to each other in synchronization with each other are provided at the other ends of the rotary shafts respectively. With this construction, lubricating oil for lubricating the synchronization gears is not needed, oil seals for preventing oil leak from the gear chamber to the pump chamber and for preventing oil leak from the gear chamber to outside are eliminated, and power loss due friction is decreased.

**[0010]** However, with the dry mechanical vacuum pump of roots type disclosed in the patent literature 1, driving torque of the drive motor is transmitted via the annular magnets to one of the rotor and this driving torque is transmitted to the other rotor by way of the synchronization gears consisting of the metal gear and plastic gear. Therefore, when increased driving torque is transmitted from the drive motor to one of the rotors, all of the driving torque is transmitted to the other rotor by way of the synchronization gears and the plastic gear may be fractured or is decreased in operation life due to the increased torque.

## SUMMARY OF THE INVENTION

**[0011]** Therefore, it is the object of the invention to provide an oil-free fluid machine unit with which torque transmission can be performed between two or more rotors in synchronized counter-rotation with one another without need for lubrication oil thereby eliminating contamination induced lubrication oil and without reduction of operation life of synchronization gears of the fluid machine.

**[0012]** To attain the object, the present invention proposes an oil-free fluid machine unit including an oil-free fluid machine, a motor connected to one of rotor shafts of the fluid machine, and a mounting base for mounting the fluid machine and the motor, the fluid machine having a rotor casing and two or more lobed rotors accommodated in the rotor casing rotatably to expel gas trapped in pockets formed between the lobes and the rotor casing as the rotors rotate, in which a pulley is attached to each of said rotor shafts at an end opposite to the motor side end thereof, a belt being looped over pulleys attached to adjacent rotor shafts so that pulleys attached to adjacent rotor shafts are rotated in counter direction to each other; and synchronization gears are attached to the other ends of the rotor shafts respectively, at least one of the synchronization gears being made of plastic material; thereby enabling torque transmission between the rotors in two ways, via belt driving and via synchronization gear drive.

**[0013]** By composing the oil-free fluid machine unit such that torque transmission between the rotors is carried out in two ways, via belt drive and via synchronization gear drive, load torque exerting on the synchronization gears is reduced. Therefore, by making at least on of the synchronization gears of plastic material, the use of lubrication oil for lubricating the synchronization gears becomes unnecessary. Further, as only a part of torque transmitted between adjacent rotors is transmitted via the belt, total torque transmission capacity can be increased with load torque exerting on the synchronization gears reduced. Thus, by adopting a plastic gear in the drive transmission mechanism composed like this, problems of reduced torque transmission capacity by use of plastic gears and poor endurance against mechanical load of plastic gears can be solved together.

**[0014]** By providing the synchronization gears at the motor side and the pulleys at the opposite side which is open to outside, torque transmission between the rotors is performed at both end sides of the rotors, and well-balanced torque transmission is carried out, and further the belt can be replaced easily when it has worn. Therefore, by adopting the drive transmission mechanism in an oil-free fluid machine,

contamination with lubricating oil can be eliminated, and particularly a dry mechanical vacuum pump of high efficiency which can produce oil-free vacuum can be provided.

**[0015]** It is preferable that an idler pulley is provided to allow pulleys attached to adjacent rotor shafts respectively to be rotated in counter direction to each other by looping a belt over the adjacent pulleys via the idler pulley.

**[0016]** As has been described in the foregoing, torque transmission between the rotors is carried out in two ways, via synchronization gear drive and via belt drive, load torque exerting on the synchronization gears is reduced, and plastic gear or gears can be adopted for the synchronization gears, resulting in requiring no lubricant to lubricate the synchronization gears and prolonged operation life of the synchronization gears. Therefore, by adopting the drive transmission mechanism in an oil-free fluid machine, contamination with lubricating oil can be eliminated, and particularly a dry mechanical vacuum pump unit of high efficiency which can produce oil-free vacuum can be provided.

## BRIEF DESCRIPTION OF THE DRAWINGS

**[0017]** FIG. **1**A is a plan view of the oil-free fluid machine composed as a dry mechanical vacuum pump of roots type equipped with the drive transmission mechanism according to the present invention, FIG. **1**B is a front view thereof, and FIG. **1**C is a side view thereof.

**[0018]** FIG. **2**A is a sectional view along line A-A in FIG. **1**A, and FIG. **2**B is a cross sectional view along Line C-C in FIG. **1**A.

## DETAILED DESCRIPTION OF THE PREFERRED EMBODIMENTS

**[0019]** A preferred embodiment of the present invention will now be detailed with reference to the accompanying drawings. It is intended, however, that unless particularly specified, dimensions, materials, relative positions and so forth of the constituent parts in the embodiments shall be interpreted as illustrative only not as limitative of the scope of the present invention.

**[0020]** FIG. **1**A is a plan view of the oil-free fluid machine composed as a dry mechanical vacuum pump of roots type equipped with the drive transmission mechanism according to the present invention, FIG. **1**B is a side view thereof, and FIG. **1**C is a front view thereof. FIG. **2** A is a sectional view along line A-A in FIG. **1**A, and FIG. **2**B is a cross sectional view along Line C-C in FIG. **1**A.

**[0021]** Although the invention will be explained taking up as an example a dry mechanical vacuum roots pump of two rotors equipped with the drive transmission mechanism, the drive transmission mechanism applied to the fluid machine of the invention can be applied to any of fluid machines having two or more counter-rotating meshed lobed rotors accommodated in a rotor casing parallel to one another to be rotated in synchronization with one another and torque transmission between the rotors is performed unlubricated condition, so applicable also to screw vacuum pumps and claw vacuum pumps.

**[0022]** Referring to FIGS. **1-2**, reference numeral **10** is a dry mechanical vacuum roots pump, **11** is a drive motor for driving the vacuum pump **10**, **12** is a driving shaft of the drive motor **11**. Reference numeral **13** is a coupling for connecting the driving shaft **12** of the drive motor **11** to an end of a rotor shaft **14** of the vacuum pump, **15** is the other rotor shaft. Reference numeral **16** and **17** are pulleys over which a belt **26** is looped to transmit torque transmitted to the rotor shaft **14** to another rotor shaft **15**. Reference numerals **18** and **19** are synchronization gears attached to the other end of the rotor shafts **14** and **15** respectively meshing with each other to allow synchronized rotation of the rotor shafts **14** and **15** in direction opposite to each other. Reference numeral **20** is a mounting base for supporting the vacuum pump **10** and the drive motor **11**. Reference numerals **21** and **22** are fixing means for fixing the vacuum pump **10** and the drive motor **11** to the mounting base **20**. Reference numerals **27** and **28** (see FIG. **2**B) are an outlet port and intake port respectively.

**[0023]** As shown in FIG. **2**B, a pair of three-lobes roots type rotors **102** and **103** are accommodated in a pump chamber **101** of a rotor casing **100**. The rotors **102** and **103** are integrated respectively with the rotary shafts **14** and **15** which are supported by oilless bearings not shown in the drawings. The rotors **102** and **103** can be rotated without contact between lobe surfaces thereof and also without contact between the peripheries of the lobes and the wall surface of the pump chamber **101**.

**[0024]** Fluid such as air is trapped in pockets **104** surrounding the lobes and carried from the intake port **28** side to the outlet port **27** side and expelled from there as the rotors **102** and **103** rotate as shown by arrows **29** in FIG. **2**B.

**[0025]** Returning to FIGS. **1**A, B, C, the vacuum pump **10** is fixed to the mounting base **20** by means of the fixing means **21**, and the driving shaft **12** of the motor **11** also fixed to the mounting base **20** is connected to the rotary shaft **14** by means of the coupling **13**. The synchronization gear **18** is attached to the rotor shaft **14** at the motor **11** side end thereof as shown in FIG. **2**A, and to the other end side of the rotor shaft **14** is attached the pulley **16** as shown in FIG. **1**B.

**[0026]** The synchronization gear **19** is attached to the rotor shaft **15** at the motor **11** side end thereof, and to the other end side of the rotor shaft **14** is attached the pulley **17**. The belt **26** is looped over the pulleys **16** and **17** via an idle pulley **25** so that the rotor shaft **14** and **15** rotate in counter direction to each other.

**[0027]** At least one of the synchronization gears **18** and **19** is made of plastics, and the other gear is made of plastics or metal. By using the plastic gear, lubricant for lubricating the meshing gears can be dispensed with. Synchronized rotation of the rotors **14**, **15** is secured by the synchronization gears **18** and **19**. Torque transmission between the rotors is done in two ways, via the pulleys **16** and **17** and via the synchronization gears **18** and **19**. For example, about 70% of torque is transmitted via the pulleys **16** and **17** and about 30% of torque is transmitted via the synchronization gears **18** and **19**.

**[0028]** By composing the drive transmission mechanism in the oil-free fluid machine like this, torque is transmit from the rotor shaft **14** connected to the motor **11** to the rotor shaft **15** in two ways, via the synchronization gears **18**, **19** and via the pulleys **17**, **16**. Therefore, torque transmitted via the synchronization gears **18**, **19** is reduced. So, making at least of one of the synchronization gears **18** and **19**, the use of lubrication oil can be eliminated. Further, as torque load on the synchronization gears is reduced, operation life of the plastic gear is increased. Thus, problems of reduced torque transmission capacity by use of plastic gears and poor endurance against mechanical load of plastic gears can be solved together.

**[0029]** By applying the drive transmission mechanism to an oil-free fluid machine, oil contamination induced by lubrication oil leak is eliminated. Further, by providing the pulleys

**16** and **17** in a side opposite to the motor **11** side, replacement of the belt is facilitated when it is deteriorated.

**[0030]** As has been described in the foregoing, by composing the drive transmission mechanism to transmit torque from a rotor shaft **14** to a rotor shaft **15** such that synchronization gears **18**, **19** are attached to the rotor shafts **14**, **15** respectively at an end side thereof and pulleys **16**, **17** are attached to the other end side respectively with a belt **26** looping over the pulleys **16**, **17** via a idler pulley **25** so that the pulleys rotate in counter direction to each other, a part of torque transmission is done via the synchronization gears **18**, **19** and the remaining torque transmission is done via the pulleys **16**, **17**. Therefore, load torque exerting on the synchronization gears is reduced, and plastic gear or gears can be adopted for the synchronization gears, resulting in requiring no lubricant to lubricate the synchronization gears and in prolonged operation life of the synchronization gears.

**[0031]** Therefore, by adopting the drive transmission mechanism in an oil-free fluid machine, contamination with lubricating oil can be eliminated, and particularly a dry mechanical vacuum pump of high efficiency which can produce oil-free vacuum can be provided.

**[0032]** According to the invention, drive transmission mechanism increased in torque transmission capacity and longevity without a need of using lubrication oil is provided, and by adopting the drive transmission mechanism in a vacuum pump, an oil contamination free vacuum pump can be provided.

**1**. An oil-free fluid machine unit comprising an oil-free fluid machine, a motor connected to one of rotor shafts of the fluid machine, and a mounting base for mounting the fluid machine and the motor, the fluid machine having a rotor casing and two or more lobed rotors accommodated in the rotor casing rotatably to expel gas trapped in pockets formed between the lobes and the rotor casing as the rotors rotate; wherein a pulley is attached to each of said rotor shafts at an end opposite to the motor side end thereof, a belt being looped over pulleys attached to adjacent rotor shafts so that pulleys attached to adjacent rotor shafts are rotated in counter direction to each other; and synchronization gears are attached to the other ends of the rotor shafts respectively, at least one of the synchronization gears being made of plastic material; whereby torque transmission between the rotors is carried out in two ways, via belt driving and via synchronization gear drive.

**2**. An oil-free fluid machine unit according to claim **1**, wherein an idler pulley is provided to allow pulleys attached to adjacent rotor shafts to be rotated in counter direction to each other by looping a belt over the adjacent pulleys via the idler pulley.

* * * * *