Sept. 16, 1941. H. M. MORROW 2,255,856

REVERSIBLE MINING MACHINE CHAIN LUG

Filed Nov. 4, 1940

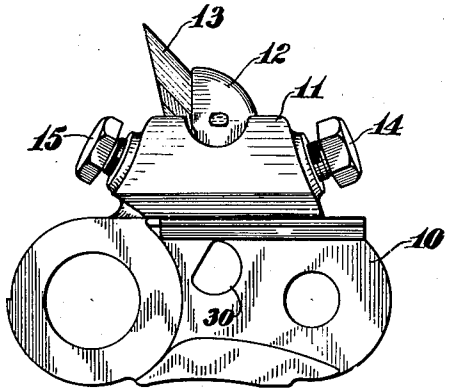

Fig. 1.

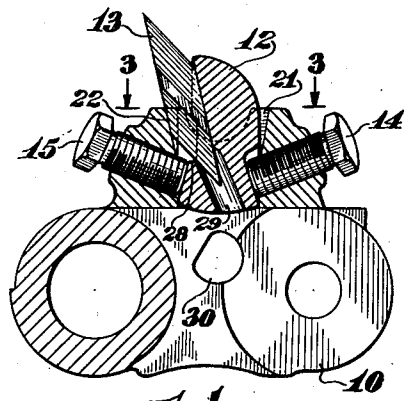

Fig. 2.

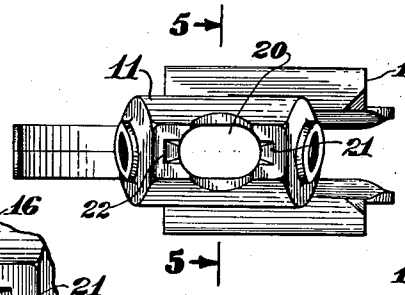

Fig. 4.

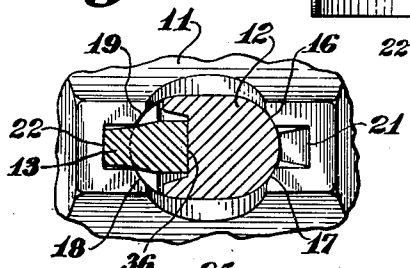

Fig. 3.

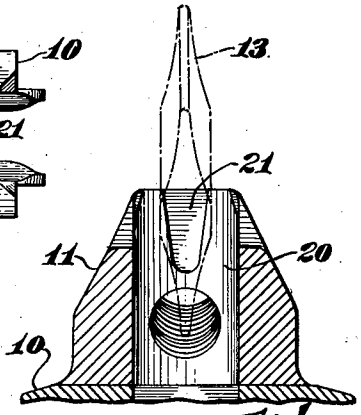

Fig. 5.

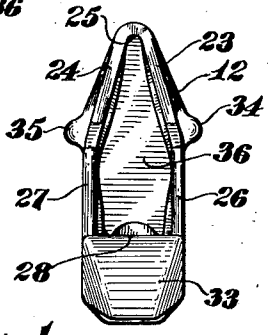

Fig. 6.

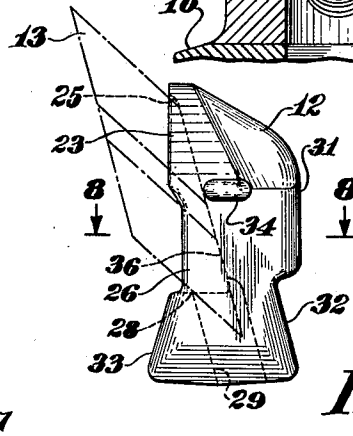

Fig. 7.

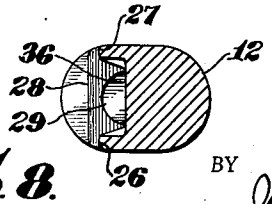

Fig. 8.

INVENTOR.
HARRY M. MORROW.
BY
Hoodling and Krost attys

Patented Sept. 16, 1941 2,255,856

UNITED STATES PATENT OFFICE

2,255,856

REVERSIBLE MINING MACHINE CHAIN LUG

Harry M. Morrow, Canton, Ohio, assignor to The Bowdil Company

Application November 4, 1940, Serial No. 364,154

7 Claims. (Cl. 262—33)

My invention relates in general to mining machine cutting chains and more particularly to a reversible mining machine chain lug.

In the mining of coal, the coal mining machine is progressively moved along the edge of the vein of coal, as the mining machine cutting chain which is mounted upon a cutter bar cuts a substantially horizontal cleft under the vein of coal. This produces a shelf of coal which is subsequently broken off by means of explosives or other means. In the actual operation, the coal cutting machine may progressively move in one direction along the edge of the coal for a considerable distance, as much as several hundred feet, before the cutting operation is finished. For single directional cutting, the coal mining machine, which is extremely difficult to move, is dragged back to the starting point, at which place another similar cut is made after the coal previously had been removed. As is clearly evident, the labor and trouble in moving the heavy coal mining machine back to its starting point is rather expensive, as well as entailing a considerable amount of loss of time. However, with my present invention, which embodies a reversible mining machine bit holder, the coal mining machine at the finish of a cut in one direction may be reversed and operated in the other direction so that it is unnecessary to drag the coal mining machine back to the starting point.

An object of my invention is the provision of a reversible mining machine chain lug adapted to hold a cutting bit in either one of two directional positions, so that the chain may be operated in either the forward or reverse direction to cut the coal or other material.

Another object of my invention is the provision of a reversible bit holder which may be reversibly positioned in a recess of a mining machine chain lug, so that a bit secured therein may be positioned to cut the coal or other material in either the forward or reverse direction of the movement of the cutter chain.

Another object of my invention is the provision of holding a cutting bit within a mining machine chain lug without the employment of separate pieces of wedges which may become lost.

Another object of my invention is the provision of a reversible bit holder having sloping or downwardly diverging surfaces, which when either surface is engaged by a set screw draws the bit holder and bit secured therein within a recess of the chain lug.

Another object of my invention is the provision of a bit holder having (1) an upper bit receiving socket portion to receive the cutting bit, (2) a bit backing portion for supporting the bit within a recess within the chain lug to give rigid support to the bit during severe cutting operation, and (3) a lower anchoring portion which when engaged by a set screw draws the bit holder and a bit fitting therein within the recess of the chain lug for securely holding the bit holder and a bit firmly within the chain lug.

Another object of my invention is the provision of a bit holder which may be easily and readily reversed for holding a bit for cutting operation either in the forward or reverse direction.

Another object of my invention is the provision of preventing coal dust or other material from collecting in the bit receiving socket, which if allowed to collect would interfere with the insertion of the cutting bit therein.

Other objects and a fuller understanding of my invention may be had by referring to the following description and claims, taken in conjunction with the accompanying drawing, in which:

Figure 1 is a side elevational view of a mining machine chain lug having a reversible bit holder embodying the features of my invention;

Figure 2 is a longitudinal cross-sectional view of the mining machine chain lug and bit holder shown in Figure 1;

Figure 3 is a fragmentary view shown in cross-section taken along the line 3—3 of Figure 2;

Figure 4 shows a plan view of the mining machine chain lug with the reversible bit holder removed;

Figure 5 shows a fragmentary and cross sectional view taken along the line 5—5 of Figure 4;

Figure 6 shows a front elevational view of my reversible bit holder;

Figure 7 shows a side elevational view of my reversible bit holder; and

Figure 8 shows a cross-sectional view taken along the line 8—8 of Figure 7.

With reference to the drawing, a mining machine chain lug embodying the features of my invention may comprise a chain lug 10 having a chain lug body 11, a reversible bit holder 12 for receiving a bit 13, and set screws 14 and 15 for drawing the bit holder 12 and the bit 13 within a recess 20 in the chain lug body 11.

The cutting bit may be of any suitable type and is preferably of the double-ended or pointed type having a rhomboidal outline in side elevation and having substantially diamond shaped parallel end cutting faces offset relative to each

other at a rhomboidal angle. In other words, the bit may be of the type illustrated in Patent No. 1,677,950 issued July 24, 1928 to N. K. Bowman, or of the type illustrated in Patent No. 2,217,347 issued October 8, 1940 to the present applicant, or of the type illustrated in Patent No. 2,217,348 issued October 8, 1940 to Charles L. Bowman, the latter two types of bit having concaved or depressed side portions to provide a cutting clearance as the points of the bits wear away.

The recess 20 in the chain lug body 11 comprises an oval opening with substantially straight end wall portions and side wall portions. The side wall portion upon one side of the recess 20 comprises substantially the distance between the reference characters 16 and 19 and the side wall portion upon the other side of the recess comprises substantially the difference between the reference characters 17 and 18. The end wall portion upon one end of the recess comprises substantially the distance between the reference characters 16 and 17 and the end wall portion upon the other end of the recess comprises substantially the distance between the reference characters 18 and 19. The distance between the end wall portions of the oval recess constitutes the major axis and the distance between the side wall portions constitutes the minor axis. Each of the end walls of the recess 20 is provided with an inclined slot 21 and 22 near the upper edge thereof to receive a portion of the exposed cutting face of the bit. The chain lug body 11 has upon each end thereof an angularly disposed set screw threaded opening to receive the set screws 14 and 15, which register with the recess near the bottom portion thereof.

The reversible bit holder 12 may be freely raised and lowered within the recess 20, as the wall portion of the recess and the sides of the holder are substantially straight and sufficient clearance exists between the two complementary engaging surfaces to allow for free movement of the holder within the recess. Therefore, the holder 12 may be easily inserted within the recess 20 for holding the bit for operation in either the forward or reverse direction. The reversible bit holder 12 has an upper bit receiving socket portion comprising a back wall 36 against which an end cutting face of the bit engages, and relatively shallow lateral sides 23 and 24, and 26 and 27, together with a relatively short inclined upper engagement surface 25 which aids in limiting the upward movement of the bit in the socket and a lower abutment surface 28 which limits the downward movement of the bit within the socket. The reversible bit holder 12 also comprises a backing portion 31 having substantially straight side walls and a straight end wall to fit complementarily with the side wall portions and an end wall portion of the recess 20. The exposed face of the cutting bit fitting into either one of the inclined slots 21 and 22 and the end wall of the backing portion 31 of the bit holder engaging an end wall portion of the recess 20, produces a wedging action within the recess 20 as the bit holder 12 and the bit 13 therein are drawn into the recess. The reversible bit holder likewise includes a lower anchoring portion having opposed end wall surfaces or portions 32 and 33, each diverging downwardly and constituting an inclined surface against which a set screw may engage for drawing the bit holder 12 and a bit 13 therein firmly within the recess. As illustrated in Figure 2, the set screws are positioned substantially perpendicular to the plane of the surfaces 32 and 33. In my invention, I may utilize either a single set screw or both set screws for engaging the anchoring portion of the bit holder. In my invention when the bit holder is drawn down into the recess the set screw, either singly or both set screws, is not subject to the severe stresses incident to the coal cutting operation for the reason that regardless of the direction of the cutting operation, the stress and pressure of the cutting action is taken up by the backing portion 31 which complementarily engages an end wall of the recess 20 in the chain lug body. In this manner the function of the set screw is to draw the reversible bit holder 12 and the bit 13 therein down into the recess, after which the stress incident to the cutting operation is transmitted to the backing portion 31 which complementarily engages an end side wall portion of the recess instead of being directly transmitted to the set screw. The lateral sides of the backing portion and of the anchoring portions are substantially straight which complementarily engage the straight side wall portions of the recess 20.

The reversible bit holder 12 has an opening 29 extending from the bottom thereof to the said receiving socket so that coal dust or other material is prevented from collecting in the bottom of the bit receiving recess to interfere with the full insertion of the bit therein. The coal dust or other material upon dropping through the opening 29 may pass downwardly and out through lateral side openings 30 in the chain lug.

The reversible bit holder 12 may be provided with lateral finger grip portions 34 and 35 which facilitate the grasping of the bit holder upon withdrawing it from the recess for inserting a new bit or reversing the bit from end-to-end. The finger grip portions 33 and 34 also prevent the bit holder from falling deeply into the recess 20 in the event that there is no bit within the holder when the set screws are turned out.

Although I have described my invention with a certain degree of particularity, it is understood that the present disclosure has been made only by way of example and that numerous changes in the details of construction and the combination and arrangement of parts may be resorted to without departing from the spirit and the scope of the invention as hereinafter claimed.

I claim as my invention:

1. A reversible mining machine chain lug adapted to hold a double-ended rhomboidal bit having end cutting faces, comprising in combination, a reversible bit holder, a chain lug body having a recess to receive the bit holder in a forward or reverse direction, said recess having end wall portions and side wall portions, said end and side wall portions being substantially straight and defining an oval opening with the distance between the end wall portions constituting the major axis, said chain lug body having at each end thereof an angularly disposed set screw threaded opening registering with each of the said end wall portions of the recess, said bit holder having an upper bit receiving socket portion and a bit backing portion and having a lower anchoring portion, said bit receiving socket portion having a back wall against which an end cutting face of the bit engages and having relatively shallow lateral walls embracing but a part of the sides of the bit with the remaining portion of the bit exposed, said backing portion of said bit holder having substantially straight side walls

and a straight end wall to fit complementarily with the side wall portions and an end wall portion of the said recess, said anchoring portion of the bit holder having opposed end wall portions, each diverging downwardly and constituting a surface against which a set screw may engage for drawing the bit holder and a bit therein firmly within the said recess, each said end wall of the said recess having an inclined slot near the upper edge thereof to receive a portion of the exposed cutting face of the bit, the exposed face of the bit fitting in the inclined slot and the end wall of the backing portion of the bit holder engaging an end wall portion of the recess producing a wedging action within the said recess as the bit holder and the bit therein are drawn into the said recess.

2. A reversible mining machine chain lug adapted to hold a double-ended rhomboidal bit having end cutting faces, comprising in combination, a reversible bit holder, a chain lug body having a recess to receive the bit holder in a forward or reverse direction, said recess having end wall portions and side wall portions, said end and side wall portions being substantially straight and defining an oval opening with the distance between the end wall portions constituting the major axis, said chain lug body having at each end thereof an angularly disposed set screw threaded opening registering with each of the said end wall portions of the recess, said bit holder having an upper bit receiving socket portion and a bit backing portion and having a lower anchoring portion, said bit receiving socket portion having a back wall against which an end cutting face of the bit engages and having relatively shallow lateral walls embracing but a part of the sides of the bit with the remaining portion of the bit exposed, said backing portion of said bit holder having substantially straight side walls and a straight end wall to fit complementarily with the side wall portions and an end wall portion of the said recess, said anchoring portion of the bit holder having opposed end wall portions, each diverging downwardly and constituting a surface against which a set screw may engage for drawing the bit holder and a bit therein firmly within the said recess, each said end wall of the said recess having an inclined slot near the upper edge thereof to receive a portion of the exposed cutting face of the bit, the exposed face of the bit fitting in the inclined slot and the end wall of the backing portion of the bit holder engaging an end wall portion of the recess producing a wedging action within the said recess as the bit holder and the bit therein are drawn into the said recess, said bit holder having an opening extending from the bottom thereof to the bit receiving socket portion.

3. A reversible mining machine chain lug adapted to hold a double-ended rhomboidal bit having end cutting faces comprising, in combination, a reversible bit holder, a chain lug body having a recess to receive the bit holder in a forward or reverse direction, said chain lug body having an angularly disposed set screw threaded opening registering with the recess, said bit holder having an upper bit receiving socket portion and a bit backing portion and having a lower anchoring portion, said bit receiving socket portion having a back wall against which an end cutting face of the bit engages and having lateral side walls embracing but a part of the sides of the bit with the remaining portion of the bit exposed, said backing portion of said bit holder fitting complementarily against a portion of the wall of the recess, said anchoring portion of the bit holder having opposed end wall portions, each diverging downwardly and constituting a surface against which a set screw may engage for drawing the bit holder and a bit therein firmly within the said recess, the exposed face of the bit and the backing portion producing a wedging action within the recess as the bit holder and the bit therein are drawn into the said recess.

4. A reversible mining machine chain lug adapted to hold a double-ended rhomboidal bit having end cutting faces comprising, in combination, a reversible bit holder, a chain lug body having a recess to receive the bit holder in a forward or reverse direction, said chain lug body having an angularly disposed set screw threaded opening registering with the recess, said bit holder having an upper bit receiving socket portion and a bit backing portion and having a lower anchoring portion, said bit receiving socket portion having a back wall against which an end cutting face of the bit engages and having lateral side walls embracing but a part of the sides of the bit with the remaining portion of the bit exposed, said backing portion of said bit holder fitting complementarily against a portion of the wall of the recess, said anchoring portion of the bit holder having opposed end wall portions, each diverging downwardly and constituting a surface against which a set screw may engage for drawing the bit holder and a bit therein firmly within the said recess, the exposed face of the bit and the backing portion producing a wedging action within the recess as the bit holder and the bit therein are drawn into the said recess, said bit holder having an opening extending from the bit receiving socket portion to the outside surface thereof.

5. A reversible mining machine chain lug adapted to hold a double-ended rhomboidal bit having end cutting faces comprising, in combination, a reversible bit holder, a chain lug body having a recess to receive the bit holder in a forward or reverse direction, said chain lug body having an angularly disposed set screw threaded opening registering with the recess, said bit holder having an upper bit receiving socket portion and a bit backing portion and having a lower anchoring portion, said bit receiving socket portion having a back wall against which an end cutting face of the bit engages and having lateral side walls embracing but a part of the sides of the bit with the remaining portion of the bit exposed, said bit receiving socket portion having upper engagement means and lower engagement means to limit the upward and downward movements of the bit within the said socket portion, said backing portion of said bit holder fitting complementarily against a portion of the wall of the recess, said anchoring portion of the bit holder having opposed end wall portions, each diverging downwardly and constituting a surface against which a set screw may engage for drawing the bit holder and a bit therein firmly within the said recess, the exposed face of the bit and the backing portion producing a wedging action within the recess as the bit holder and the bit therein are drawn into the said recess.

6. A reversible mining machine chain lug adapted to hold a double-ended bit having substantially diamond shaped end cutting faces and substantially concaved side faces comprising, in combination, a reversible bit holder, a chain lug body having a recess to receive the bit holder in a

forward or reverse direction, said chain lug body having an angularly disposed set screw threaded opening registering with the recess, said bit holder having an upper bit receiving socket portion and a bit backing portion and having a lower anchoring portion, said bit receiving socket portion having a back wall against which an end cutting face of the bit engages and having lateral convexed side walls complementarily embracing but a part of the concaved side faces of the bit with the remaining portion of the bit exposed, said backing portion of said bit holder fitting complementarily against a portion of the wall of the recess, said anchoring portion of the bit holder having opposed end wall portions, each diverging downwardly and constituting a surface against which a set screw may engage for drawing the bit holder and a bit therein firmly within the said recess, the exposed face of the bit and the backing portion producing a wedging action within the recess as the bit holder and the bit therein are drawn into the said recess.

7. A reversible mining machine chain lug adapted to hold a double-ended rhomboidal bit having end cutting faces comprising, in combination, a reversible bit holder, a chain lug body having a recess to receive the bit holder in a forward or reverse direction, said chain lug body having an angularly disposed set screw threaded opening registering with the recess, said bit holder having an upper bit receiving socket portion and a bit backing portion and having a lower anchoring portion, said bit receiving socket portion having a back wall against which an end cutting face of the bit engages and having lateral side walls embracing but a part of the sides of the bit with the remaining portion of the bit exposed, said backing portion of said bit holder fitting complementarily against a portion of the wall of the recess, said anchoring portion of the bit holder having opposed end wall portions, each diverging downwardly and constituting a surface against which a set screw may engage for drawing the bit holder and a bit therein firmly within the said recess, the exposed face of the bit and the backing portion producing a wedging action within the recess as the bit holder and the bit therein are drawn into the said recess, the portion of the recess against which the exposed face of the bit engages being substantially parallel to the back wall of the bit receiving socket portion.

HARRY M. MORROW.