May 2, 1967 L. D. BARR 3,316,911

INFANT GARMENT

Filed May 20, 1964 4 Sheets-Sheet 1

FIG. 1

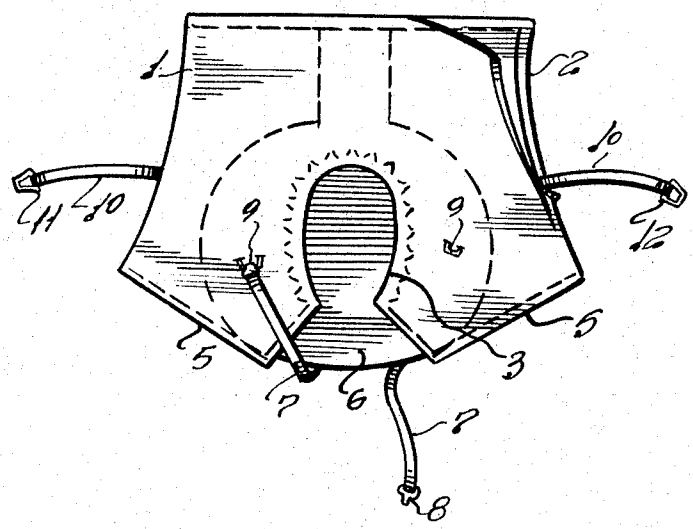

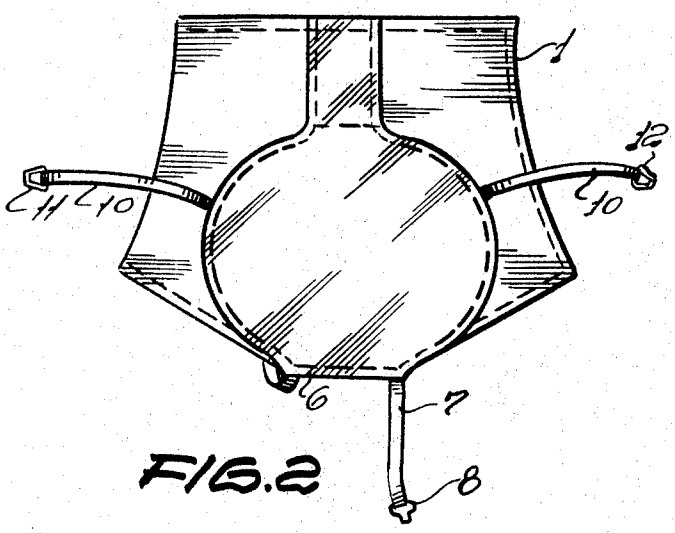

FIG. 2

INVENTOR
LUIS DAVID BARR.

BY Otto John Munn.

ATTORNEY

May 2, 1967 L. D. BARR 3,316,911

INFANT GARMENT

Filed May 20, 1964 4 Sheets-Sheet 2

FIG. 3

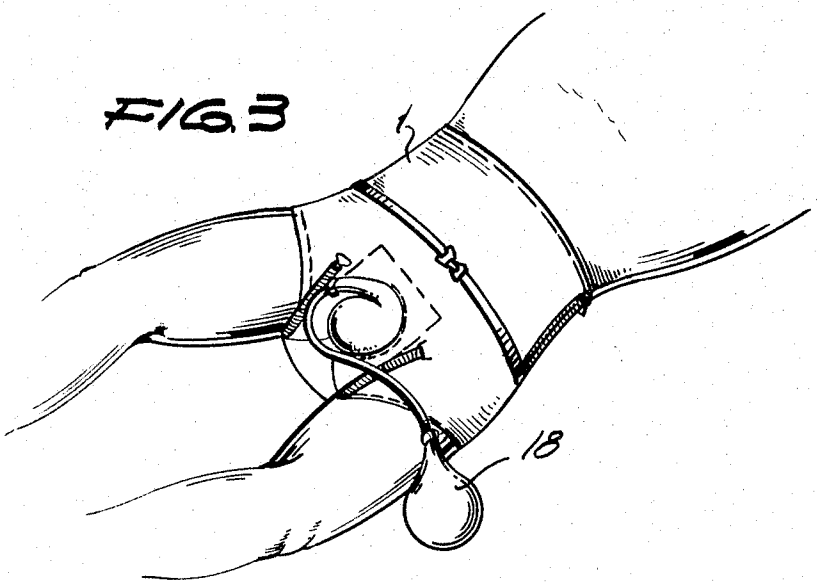

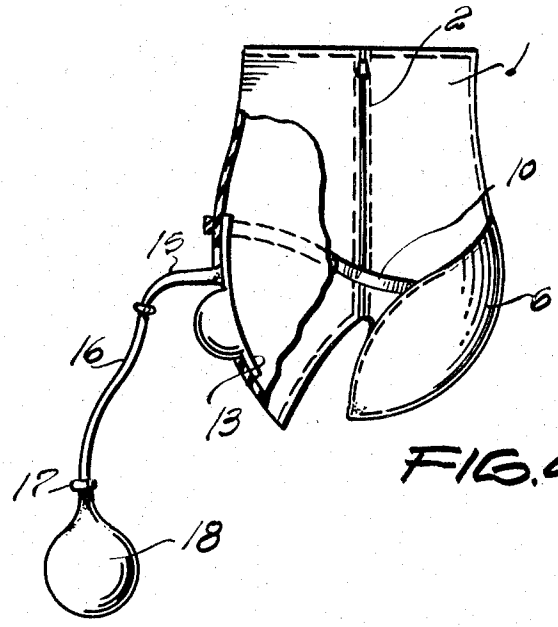

FIG. 4

INVENTOR
LUIS DAVID BARR.

BY Otto John Munz.

ATTORNEY

May 2, 1967 L. D. BARR 3,316,911

INFANT GARMENT

Filed May 20, 1964 4 Sheets-Sheet 3

FIG. 5

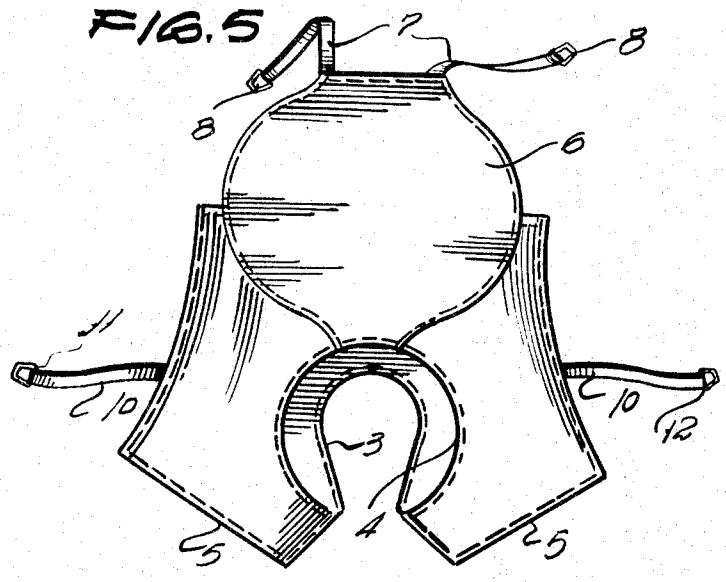

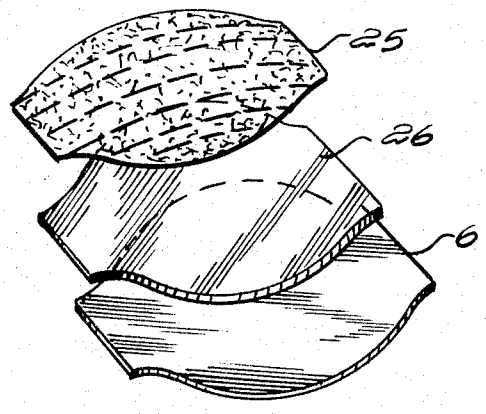

FIG. 6

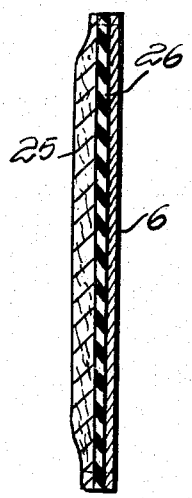

FIG. 7

INVENTOR

LUIS DAVID BARR.

BY Otto John Munz.

ATTORNEY

May 2, 1967 L. D. BARR 3,316,911

INFANT GARMENT

Filed May 20, 1964 4 Sheets-Sheet 4

FIG. 8

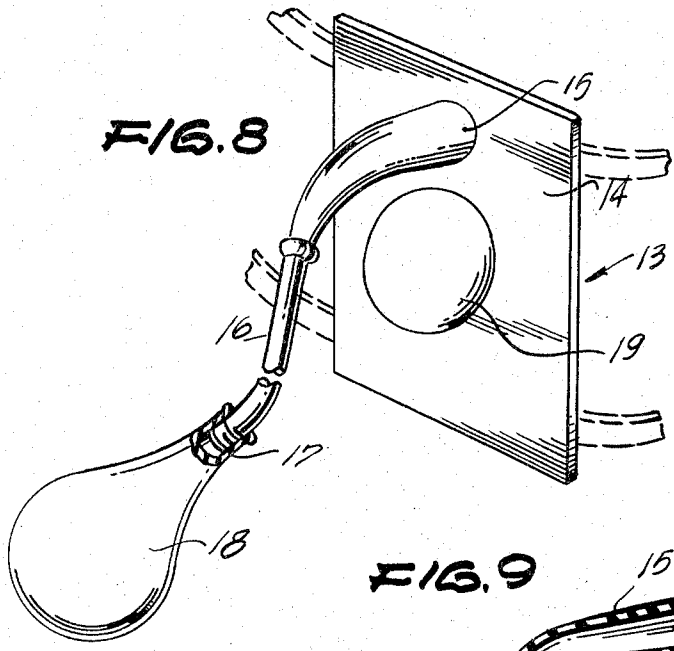

FIG. 9

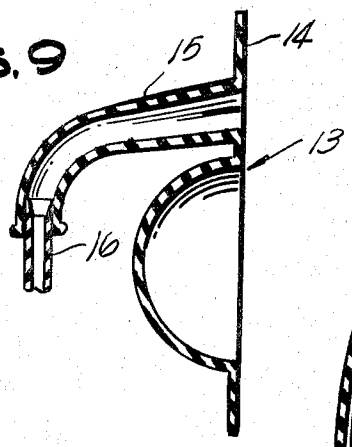

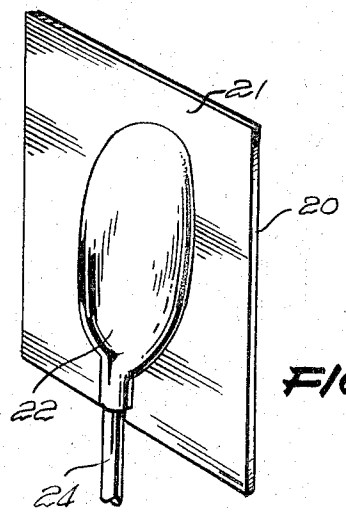

FIG. 10

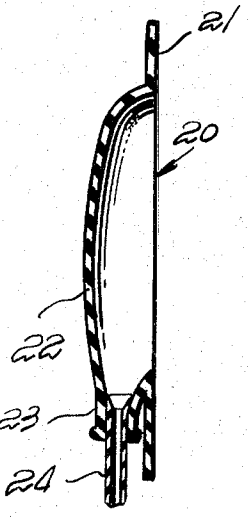

FIG. 11

INVENTOR.
LUIS DAVID BARR.
BY Otto John Munn
ATTORNEY.

United States Patent Office 3,316,911 Patented May 2, 1967

3,316,911

INFANT GARMENT

Luis D. Barr, Diagonal Roque Saenz Pena 1119, 7 piso, Buenos Aires, Argentina

Filed May 20, 1964, Ser. No. 368,789
3 Claims. (Cl. 128—286)

The instant invention is that of a device for infants, particularly babies in arms.

The need for the repeated "changing" of infants, especially when breast-fed, creates a troublesome duty due to the fact that they cannot control their bladder or bowel motions and consequently perform their evacuatory necessities at any and every moment.

The normal practice is to use diapers, which have to be changed in every opportunity, so as to protect the delicate skin of the infant from the formation of an irritating rash that can develop into painful sores, especially in warm weather.

This frequent changing of diapers, apart from being a tiring duty for the mother or nurse, calls for the possession of an appreciable number of these elements and the repeated washing and drying of same.

The instant invention solves this problem in an efficient and practical manner by means of a garment-like supporting body that has the following characteristics:

This garment consists of a supporting body of knicker type, preferably of elastic cloth, having open spaces in front and near central portions of the crotch.

One complementary body or panel of water-proof material, preferably of rubber or latex, is fitted and attached by straps to the front of the supporting body and another complementary body or panel is attached to the rear of same so as to cover the rear opening.

The front complementary panel, which is removable is molded alternately suitable for use by a male or female infant at the zone of the urinal organ so as to encompass said genital, said molding being in the shape of a small cup in the case of a female infant.

In both cases an outlet tube is provided for conducting the urine into a readily detachable receptacle.

For easier comprehension of this invention a set of drawings is attached to this specification wherein:

FIG. 1 shows the supporting body of the device viewed from the front.

FIG. 2 shows the supporting body of the device viewed from the rear.

FIG. 3 is a perspective elevation of the device for a male infant.

FIG. 4 is a side view, partially in section, of the device shown in FIG. 3.

FIG. 5 is a rear view of the supporting body of the device for a female infant.

FIG. 6 shows three absorbent pads, suitable for use in the rear portion of the device.

FIG. 7 is a sectional view of the pads shown in FIG. 6.

FIG. 8 shows the front complementary panel of the device for a male infant in detail.

FIG. 9 shows a side view of a portion of the front complementary panel shown in FIG. 8 in section.

FIG. 10 shows the front complementary panel of the device for a female infant.

FIG. 11 shows a side view of a portion of the front complementary panel in FIG. 10, shown in section.

From these illustrations it will be seen that the device of the instant invention consists of a supporting garment-like body **1**, similar in type to a pair of knickers or a boy's bathing drawers, having a lateral vertical closure of sliding fastener type.

The crotch of the body **1** has two openings, a front **3** and a rear **4**, and said body **1** has adequate free spaces **5** for the passage of the infant's legs.

The rear, window-like opening **4** is covered by the panel **6**, which is of the same material as that of the supporting body **1** to which it is sewn along the edge of the upper middle portion of the rear opening **4**.

This rear complementary panel **6** is of a substantially larger area than that of the opening **4** in the supporting body **1** and is provided with two straps **7** attached to its free lower edge, said straps **7** having means **8** at their ends adapted to be attached to corresponding hooks **9** provided on the front portion of the supporting body **1**.

Two more lateral straps **10** are provided, adjacent the free space attached to opposite lateral edges of the rear complementary panel **6** and **4**, having corresponding attachment means **11** and **12**.

The combination described above is the supporting body of the complementary panels that can be described as follows:

One complementary body **13** preferably of rubber, latex or similar water-proof material, consists of a panel having a central portion suitably molded so as to present a protruding tube **15** of gradually decreasing diameter, forming a housing for a male infant's penis.

The outer end of this tube **15** is fitted by means of a push connection to another tube **16**, having screw or similar connecting means of attachment **17** to a receptacle **18** of elastic, water-proof material.

The panel **14** furthermore has a molded salient **19** shaped so as to enclose a male infant's sex organs (FIGS. 8 and 9) and, as illustrated in FIGS. 10 and 11, a complementary panel **20** for use by a female infant consists of a sheet of rubber or similar, water-proof material **21** having a cup-shaped molded portion **22**, provided at its lower extremity with an outlet **23** adapted to make a push fit with a tube **24** the free further end of which is provided with a similar fitting as that described above **17** and a similar receptacle **18**.

At least two absorbent sheets or pads **25** and **26** are provided for covering the rear opening **4** in the body **6** for purposes that will be obvious.

The application of the complementary bodies or panels **13** and **20** is semi-permanent, as these panels remain adjusted and attached to the supporting body **1**.

It will be evident that, as the receptacle **18** is provided with a screw-fitting **17** for easy and rapid attachment and removal in order to empty same, it is unnecessary to remove the whole combination each time the infant has urinated.

The operation of discharging and changing the absorbent pads **25** and **26** is readily effected by unhooking the two straps **7** that attach the lower edge of the rear complementary panel **6** to the supporting body **1**.

Obviously, many modifications and variations of the invention as hereinabove set forth can be made without departing from the essence and scope thereof, and only such limitations should be applied as are indicated in the claims.

What I claim is:

1. Device for infants comprising a garment-like supporting body including panel holding means removably holding front and rear complementary panels in a position to enclose an infant's genitals, and front and rear complementary water-proof panels held in said panel holding means and having outlet fitting means for capturing and detachably retaining released urine and stool respectively, the rear complementary panel being permanently attached along the upper edge thereof to the supporting body, the front complementary panel having a molded genital enclosure means, and including tubular means having one end connected to the genital enclosure means and the other end detachably connected to a collapsible receptacle by a pressure fitting, and strap means attached to the supporting body for holding the panel

olding means in the position for holding the front and ear complementary panels, said strap means comprising first pair of straps having a first end attached to an opposite lateral edge of the rear complementary panel, the ther ends of the straps having means for attaching them ogether, whereby the straps can be passed around the espective sides of an infant and fastened together to hold he rear complementary panel in place.

2. Device for infants comprising a garment-like supporting body including panel holding means removably olding front and rear complementary panels in a position to enclose an infant's genitals, and front and rear omplementary water-proof panels held in said panel olding means and having outlet fitting means for capuring and detachably retaining released urine and stool espectively, the rear complementary panel being permanently attached along the upper edge thereof to the upporting body, the front complementary panel having molded genital enclosure means, and including tubular neans having one end connected to the genital enclosure neans and the other end detachably connected to a collapsible receptacle by a pressure fitting, and strap means ttached to the supporting body for holding the panel olding means in the position for holding the front and ear complementary panels, said strap means comprising ach of a second pair of straps having a first end attached o the lower edge of the rear complementary panel, the ther ends of the second pair of straps having attachment means, and means attached to the outer surface of

the front panel holding means for engagement with a respective one of the attachment means on the ends of the second pair of straps, whereby the second pair of straps can be passed between the legs of an infant and fastened to the front of the garment-supporting body to hold the panel holding means in the position for holding the front and rear complementary panels.

3. Device for infants comprising a garment-like supporting body including panel holding means removably holding front and rear complementary panels in a position to enclose an infant's genitals, and front and rear complementary water-proof panels held in said panel holding means and having outlet fitting means for capturing and detachably retaining released urine and stool respectively, said body defining an opening in the rear thereof, the rear complementary panel having an area larger than the opening and being permanently attached along the upper edge thereof to the outer surface of the supporting body and covering the opening, and at least two replaceably adsorbent napkins covering the rear opening.

References Cited by the Examiner

UNITED STATES PATENTS

3,161,198	12/1964	Moxley	128—295
3,182,661	5/1965	Riberio et al.	128—286

RICHARD A. GAUDET, *Primary Examiner.*

C. F. ROSENBAUM, *Assistant Examiner.*