Jan. 26, 1965 K. W. FOSTER 3,167,049

POSITION LOCATING DEVICE

Filed Dec. 28, 1962 2 Sheets-Sheet 1

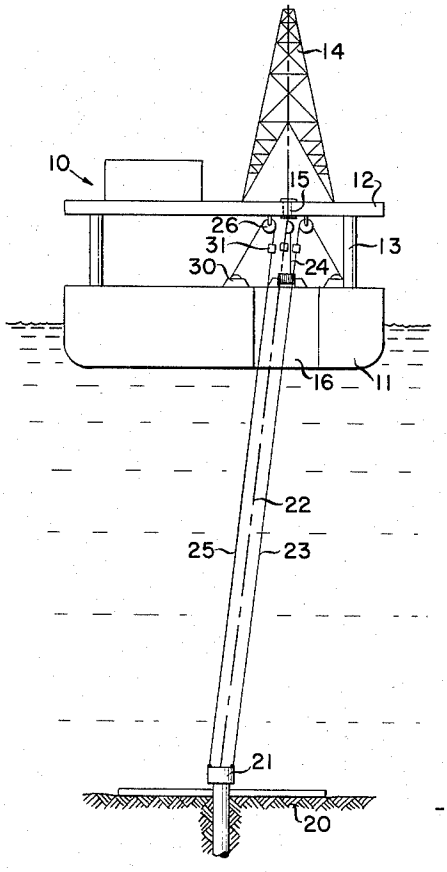

FIG. 1

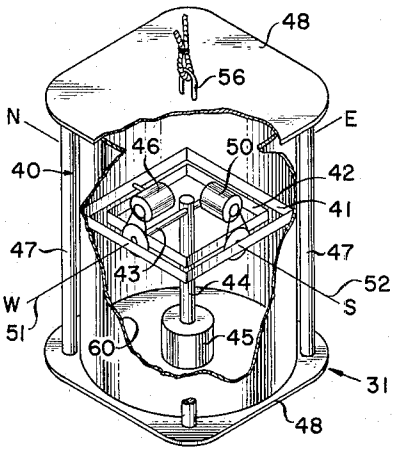

FIG. 2

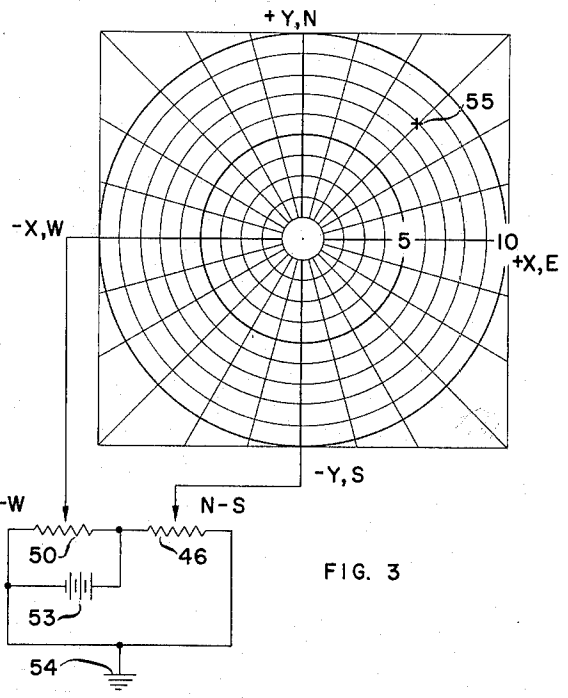

FIG. 3

INVENTOR:
K. W. FOSTER
BY: Maxine E. Bibb
HIS ATTORNEY

Jan. 26, 1965 K. W. FOSTER 3,167,049

POSITION LOCATING DEVICE

Filed Dec. 28, 1962 2 Sheets-Sheet 2

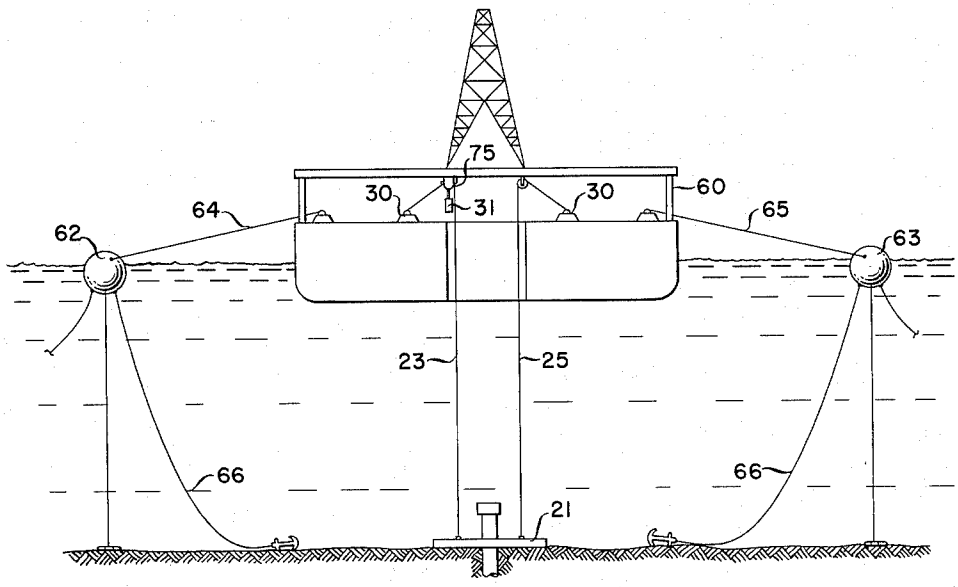

FIG. 4

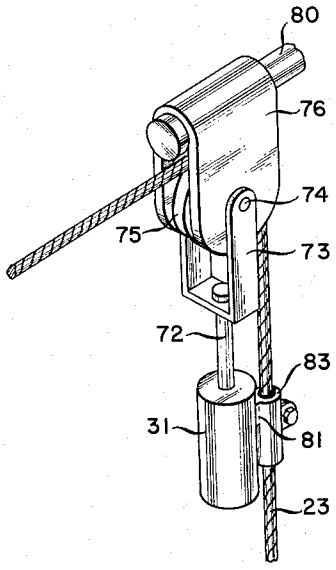

FIG. 5

INVENTOR:
K. W. FOSTER
BY: Thomas E. Beck
HIS ATTORNEY

United States Patent Office 3,167,049
Patented Jan. 26, 1965

3,167,049

POSITION LOCATING DEVICE

Kenneth W. Foster, Houston, Tex., assignor to Shell Oil Company, New York, N.Y., a corporation of Delaware

Filed Dec. 28, 1962, Ser. No. 248,042
2 Claims. (Cl. 114—144)

This invention pertains to oil well equipment and more particularly to a device for determining the location of a floating vessel with respect to the wellhead of an underwater or offshore oil well.

In the drilling of offshore oil wells two general types of equipment are used. One type of equipment utilizes a fixed platform which is firmly attached to the floor of the ocean or body of water and the other being a floating platform which is merely anchored over the position in which the well is to be drilled. When using a floating platform it is necessary to accurately locate the platform over the site of the well and maintain it in this position. Even after the floating platform is anchored in position it tends to shift a small amount with relation to the axis of the borehole of the underwater well. This shifting necessitates the bending of the drill string or casing as it is lowered into the borehole which causes considerable difficulty. When the angle between the axis of the drill string and the axis of the borehole becomes too large it is impossible to drill the well due to the increased stress placed on the drilling string.

In the past various methods and equipment have been used in an effort to determine the deviation of the drilling barge or vessel from the desired location. These prior methods utilized complicated electronic gear such as electronic fathometers to locate a triangular target placed on the bottom of the ocean at the location of the wellhead. Also, other types of electronic gear such as television cameras have been used for locating the wellhead and estimating the deviation of the drilling barge from the desired location. All of these methods are objectionable because they give inaccurate results and utilize complicated electronic gear that requires skilled personnel to operate.

Accordingly, the principal object of this invention is to provide a simple means for accurately positioning a floating vessel or drilling barge over an underwater wellhead.

A further object of this invention is to provide a novel system which indicates both the deviation and direction of the deviation of a floating vessel or drilling barge from the axis of an underwater well.

The above objects and advantages of this invention are achieved by providing a guide line connecting at one end of the wellhead and at the other end to a tension means on the drilling barge. The tension means on the drilling barge maintains sufficient tension on the guide line to draw it into a substantially straight line. A tiltmeter is secured to the guide line in an oriented position to measure the tilt or deviation of the guide line from a vertical position about the two axes at right angles to each other, The measured angular deviations of the guide line from the vertical are converted into electrical signals and used to energize the X and Y axes of an XY-type of plotter. Thus, the exact orientation of the drilling barge from the vertical axis of the well is accurately determined both as to magnitude and direction of displacement.

This invention will be more easily understood by those skilled in the art from the following detailed description of a preferred embodiment when taken in conjunction with the attached drawing in which:

FIGURE 1 is a view of the system attached to a floating drilling barge;

FIGURE 2 is an exploded pictorial view showing the construction of the tiltmeter used in FIGURE 1;

FIGURE 3 is a schematic drawing illustrating the plotting of the position of the floating drilling barge with relation to the underwater wellhead;

FIGURE 4 shows another embodiment of this invention that includes an anchoring means for the floating drilling barge; and

FIGURE 5 is a perspective view of the tiltmeter mounting shown in FIGURE 4.

Referring now particularly to FIGURE 1, there is shown a floating vessel or drilling barge **10** which is anchored over an underwater wellhead **21** by any desired means (not shown). The drilling barge consists of a supporting barge or floating member **11** and an elevated platform **12** which is supported from the top of the barge **11** by a plurality of columns **13**. Mounted on the elevated platform is a derrick or drilling rig **14** which is disposed over openings **15** and **16** in the elevated platform and barge, respectively. The drilling rig and derrick **14** may be a conventional rotary rig used on land for drilling oil wells and the like which is mounted on the elevated platform. In addition, the necessary machinery for operation of the rig may be mounted on the platform of the barge **10** as is well known in the art of offshore drilling barges.

A suitable wellhead or platform **21** is securely anchored or fastened to the bottom of the body of water **20** by any desirable means not shown. The wellhead **21** of course contains the necessary auxiliary equipment required in offshore drilling such an automatic shut-down devices and the like. Three guide lines **23**, **24** and **25** have their lower ends attached to the top of the wellhead **21** and are led upwardly through the bottom of the elevated platform where they pass over sheaves **26** secured to the underside of the platform **12**. The guide lines are oriented on the drilling barge in the same locations as their lower ends occupy on the wellhead. The guide lines **23**, **24** and **25** are normally utilized for guiding tools, equipment drill strings and the like from the bottom of the barge **11** to the wellhead **21**. The free ends of the guide lines are attached to a suitable tensioning means **30** to maintain sufficient tension on the guide lines to draw them into a substantially straight line. The tensioning means may be winches located on the drilling barge with the winches in turn being driven by prime movers through fluid couplings. In this manner the prime movers would maintain a predetermined tension on the guide lines through the slippage of the fluid coupling. The force required to draw the guide lines into a substantially straight line will vary but a force on the order of 5,000 pounds would be sufficient under most conditions.

As shown in FIGURE 1, the center line or axis of the drill string is displaced to the right of the axis of the underwater wellhead **21** with the dotted line **22** representing the axis of the drill string between the barge and the wellhead. From this representation it will be seen that the drill string must first be bent in one direction as it leaves the lower end of the opening **16** and then bent in the opposite direction as it enters the wellhead **21**. As the drill string rotates these bends will, of course, reverse, thus severely stressing the tubing forming the drill string.

In order to measure the angle between the guide lines **23**, **24** and **25** and the vertical axis of the wellhead **21**, tiltmeters **31** are attached to one or more of the guide lines at any convenient location above the surface of the water. The tiltmeter **31** is designed to measure the angle of deviation of the guide lines from the vertical in two planes which are substantially at right angles to each other and in addition are parallel to the vertical axis of the wellhead **21**.

The detailed construction of the tiltmeters **31** are shown in FIGURE 2 and consist of an outer frame work or cage **40**. The outer frame work or cage may assume any desired construction being shown as two end plates **48** which are held in a spaced relation and secured together by four

tubular members 47 located at the corners. The tubular members 47 may be fastened to the end plates 48 by any desired means such as welding or the like. A lifting ring 56 is attached to the center of both the upper and lower plates and is utilized for attaching the guide lines to the tiltmeter case 40. Of course, the rings 56 should be attached so that they are aligned with the vertical axis of the tiltmeter in order that the tiltmeter will accurately measure the desired angles.

The tiltmeter proper consists of a substantially sealed case 60 in which there is mounted a gimbal or outer frame 41. The frame 41 is secured to the case 60 by any desired means such as welding or the like. While the gimbal frame is shown as being square, of course, a round gimbal frame could also be used if one desired. Mounted within the gimbal frame 41 is the gimbal ring 42 which is pivoted on the gimbal frame 41 along an axis 52 which, for convenience, is designated the north-south axis. Pivoted within the gimbal ring 42 on a shaft 43 is a pendulum rod 44 having a pendulum weight 45 at its lower end. The pendulum rod 44 is pivoted at its upper end about an axis 51 which is disposed in the same plane and at right angles to the axis 52. The axis 51, for convenience, is designated as the east-west axis. Of course, the pivots for both the gimbal ring 42 and the pendulum shaft 44 should be as free of friction as possible so that the pendulum may move freely in both north-south and east-west directions. Two potentiometers 50 and 46 are disposed to be actuated by movement of the pendulum about either the east-west or north-south axis, respectively. The potentiometers 46 and 50 should be chosen so that they will provide an electrical output signal which is proportional to the angular displacement of the pendulum about the two axes.

The above tiltmeter is mounted in the sealed case 60 to protect it from the weather with the case 60 in turn being securely mounted in the frame or cage 40. When the sealed case 60 is mounted in the frame 40, care should be taken to orient both axes of the tiltmeter with the frame 40 and the axis of the pendulum with the mounting means used for attaching the guide lines to the frame 40. While the above describes a suitable design for the tiltmeter other well known tiltmeters may be used, the only requirement being that they accurately measure the deviation of the guide lines in two oriented planes. Of course, two tiltmeters could also be used on each guide line with one meter measuring the deviation angle in one plane and the second meter measuring the deviation angle in a plane at right angles to the first plane.

From the above description it will be appreciated that there has been provided a tiltmeter which is capable of measuring the angular deflection of a guide line in two planes which are at right angles to each other. Thus, if the tiltmeter is attached to the guide lines so that the axis of the guide line passes through the axis of the tiltmeter the tiltmeter will accurately measure the angular deflection of the guide line in the two planes. Furthermore, if the axis of the tiltmeter is geographically oriented with the wellhead it will accurately measure the direction and distance that the center line of the drill rig 14 has been displaced from the wellhead. Also, through this arrangement the orientation of a vessel may be determined with respect to the position of a reference point on the floor of a body of water, i.e., a wellhead.

Referring now to FIGURE 3, there is shown one means by which the information obtained from the tiltmeter may be utilized to plot the position of the drilling barge. In this figure the two potentiometers 46 and 50 are shown as being powered from a battery 53 which has its negative side connected to a ground 54. The output from the potentiometer 46 which measures the movement in a north-south direction is applied to the Y axis of an XY recorder so that it will move the recording mechanism in a Y direction. The output from the potentiometer 50 which measures the movement in the east-west direction is applied to the X axis of the recorder and thus moves the recording mechanism in an X direction. A combination of the two movements will displace the recording element of the recorder to a given location which is shown in FIGURE 3 at 55. If this is the point of the recording of the deflection of the guide line as measured by the tiltmeter it would indicate that the floating vessel is displaced in a north-east direction and that the angular deflection between the center line of the drill rig and the axis of the well bore is 8 degrees. While the deflection is given as an angular measurement it could easily be recorded as an actual distance if desired. Angular displacements are preferred since the stress on the drill string or other equipment lowered to the wellhead is a function of the angular displacement. Also, by recording the location of the floating vessel 10 as an angular deflection one need not compensate for varying water depths since the angular deflection of the vessel does not depend upon the water depth while the actual distance the vessel is displaced is a combination of the angular displacement and the water depth. Thus, to measure the actual displacement one would need to compensate the instrument for changing water depths or else calculate the displacement for each reading. Of course, the information from the tiltmeters disposed on the remaining guide lines must be recorded on a similar XY recorder or recorded on the same XY recorder on a time sharing basis.

Referring now to FIGURE 4, there is shown a drilling barge 60 positioned over a submerged wellhead 21 similar to the barge shown in FIGURE 1. The drilling barge is held in position by an anchoring system utilizing a plurality of moored spring buoys 62 and 63. The barge is attached to the moored buoys 62 and 63 by suitable mooring lines 64 and 65, respectively. The buoys 62 and 63 are held in position by a plurality of anchors 66 disposed in a suitable pattern. Thus, by lengthening or shortening of the mooring lines 64 and 65 the drilling barge 60 may be maneuvered and positioned over the wellhead 21. In some circumstances it may be desirable to eliminate the spring buoys and use anchors that have a long-scope anchor line to maneuver the vessel.

The drilling barge is provided with a plurality of guide lines 23 and 25 that are maintained in a taut condition by means of tensioning devices 30 and 31. The tiltmeter 31 is disposed to sense the deflection or tilt of the guide line 23 in two vertical planes at substantially right angles to each other as explained above with reference to FIGURE 1. The tiltmeter 31 is mounted in a mounting bracket shown in FIGURE 5 and described below that maintains the tiltmeter oriented with the drilling barge 60.

Referring now to FIGURE 5, the tiltmeter 31 is supported by a rod member 72 extending from the bottom of a U-shaped bracket 73. The U-shaped bracket 73 is pivoted on a pin 74 that also supports the sheave 75 over which the guide line 23 passes. The pin 74 is supported in a second U-shaped bracket 76 that is rotatably supported on a shaft 80. The tiltmeter is attached to the guide line 23 by means of a sleeve member 81 having a suitable opening 83 at its outer end through which the guide line 23 passes. The member 81 is preferably provided with hinged openings at its outer end having a suitable bearing for the guide line. A suitable bearing material would be lignum vitae wood which will provide a good bearing surface and resist the abrasion of the guide line 23.

From the above description of FIGURES 4 and 5, it can be appreciated that a means has been provided whereby the tiltmeter may freely pivot or rotate around two axes at substantially right angles to each other. Thus, the tiltmeter will be aligned with the direction or tilt of the guide line 23. In addition, the shaft 80 is fixed to the structure of the drilling barge 60 and thus the two axes of rotation of the tiltmeter 31 will be oriented with the drilling barge 60. In cases where the drilling barge 60 is in the form of a vessel having known axes as for example, athwartships and longitudinal axes, the axes of the

tiltmeter could be aligned with these axes of the vessel. In many cases the drilling barge 60 has no known axes and thus the tiltmeter is merely oriented with the drilling barge proper. In addition, the anchoring or mooring system shown in FIGURE 4 permits one to move the drilling barge to maneuver or position the drill rig over the submerged wellhead 21. While but two buoys are shown, a plurality will be required in order that the barge may be moved in any desired direction.

While but one embodiment of this invention has been described in detail it is susceptible to many modifications. As explained above, various types of known tiltmeters may be used. Also, while three guide lines are shown one will give usable information although the remainder may be used to check the results. Accordingly, this invention should not be limited to the above-described details but only to its broad spirit and scope.

This application is a continuation-in-part of a copending application of Kenneth W. Foster, Serial No. 830,604, filed July 30, 1959, and now Patent No. 3,121,954.

I claim as my invention:

1. A system for mounting a tiltmeter used to determine the position of a floating vessel with respect to a known underwater location, said system comprising:

a cable, one end of said cable being anchored in a position bearing a known relation to the underwater location, the other end of said cable extending to the vessel;

a U-shaped bracket, the bight of said U-shaped bracket being pivotally mounted on said vessel, the axis of said pivotal mounting being at a known orientation with respect to said vessel;

a sheave, said sheave being rotatably mounted between the legs of said U-shaped bracket for rotation about a second axis at right angles to the axis of said pivotal mounting;

a tensioning means, said cable passing upwardly from said anchored end over said sheave and coupled to said tensioning means;

a tiltmeter assembly, said tiltmeter assembly being rotatably supported on said second axis and extending downwardly therefrom adjacent the portion of the cable between said anchored end and said sheave;

an attachment member, said attachment member extending from said tiltmeter assembly and engaging said cable whereby said tiltmeter follows the movement of said cable.

2. The system of claim 1 wherein the pivotal axis of said U-shaped bracket is aligned with one of the major axes of said vessel.

References Cited in the file of this patent

UNITED STATES PATENTS

2,650,046	Vanderlip	Aug. 25, 1953
2,873,075	Mooers et al.	Feb. 10, 1959
3,010,214	Postlewaite	Nov. 28, 1961
3,105,453	Hayes	Oct. 1, 1963