Feb. 17, 1931. J. F. DEMPSEY 1,793,067

RECORDING DEVICE

Filed Aug. 6, 1926 6 Sheets-Sheet 1

Fig. 25.

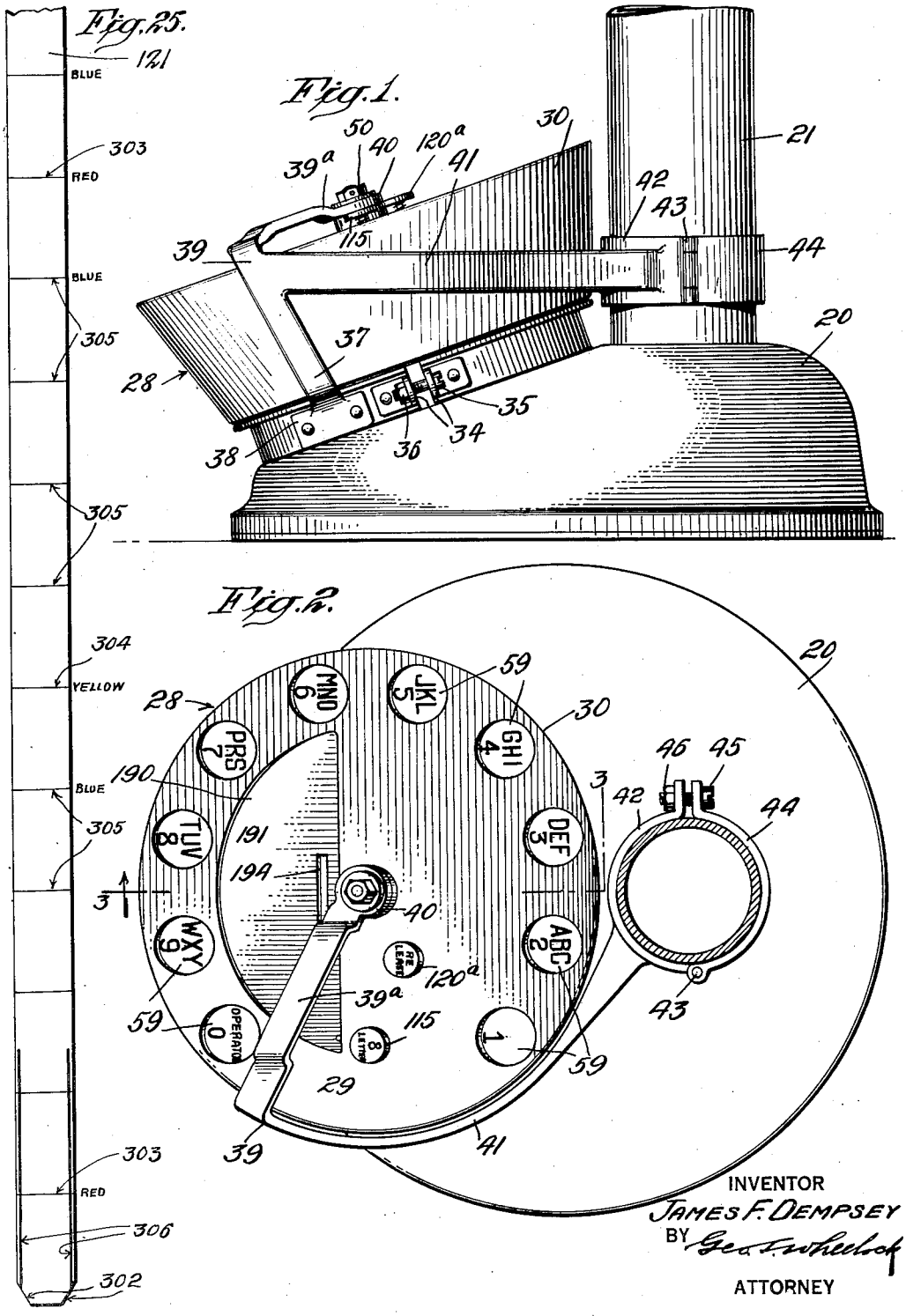

Fig. 1.

Fig. 2.

INVENTOR
JAMES F. DEMPSEY
BY Geo. Whitlock
ATTORNEY

Feb. 17, 1931. J. F. DEMPSEY 1,793,067

RECORDING DEVICE

Filed Aug. 6, 1926 6 Sheets-Sheet 2

Fig. 3.

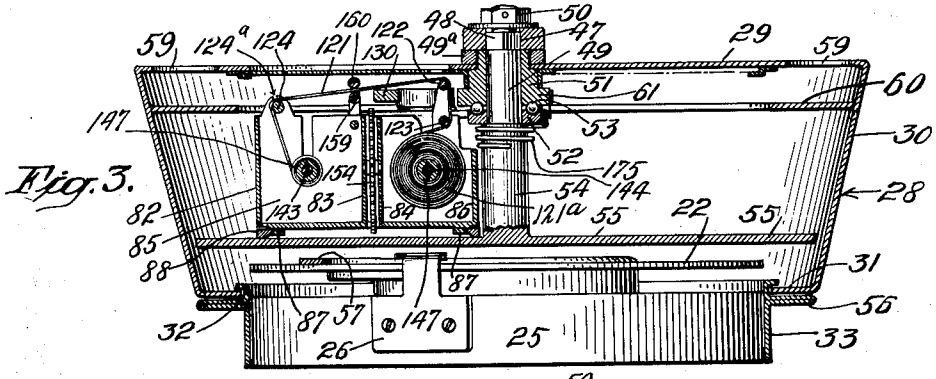

Fig. 4.

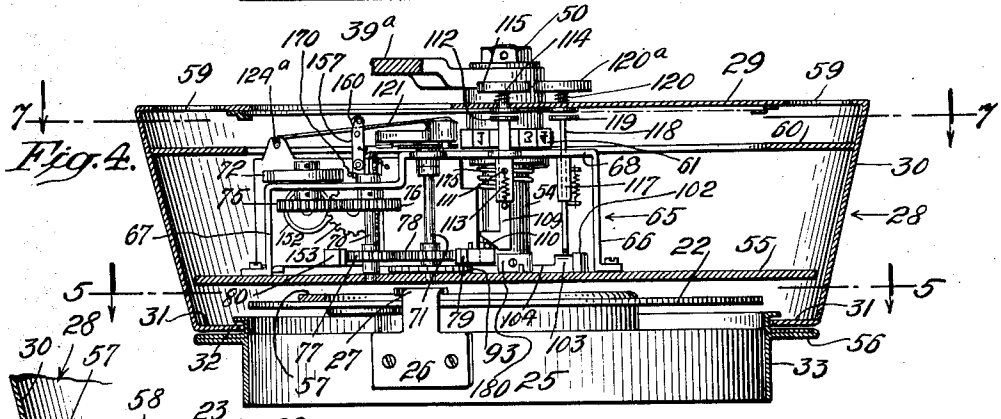

Fig. 6.

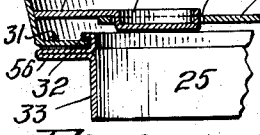

Fig. 5.

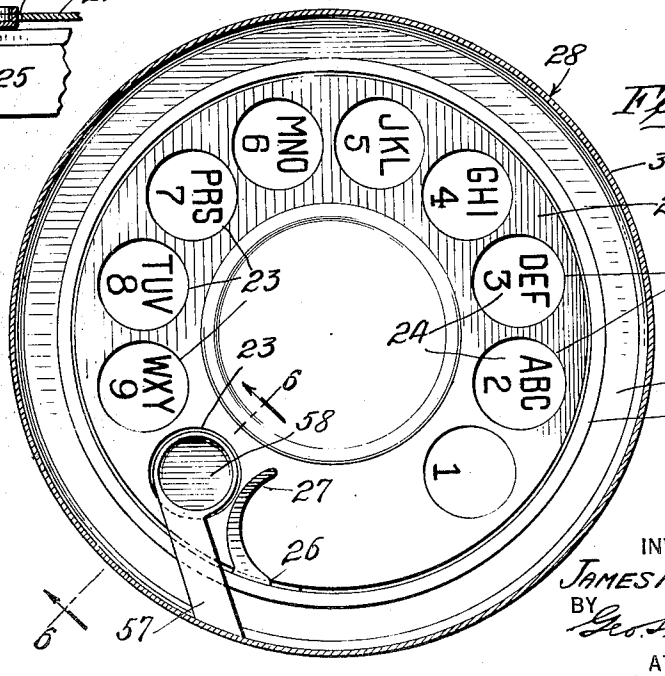

INVENTOR
JAMES F. DEMPSEY
BY Geo. S. Scheelock
ATTORNEY

Feb. 17, 1931. J. F. DEMPSEY 1,793,067

RECORDING DEVICE

Filed Aug. 6, 1926 6 Sheets-Sheet 3

Fig. 7.

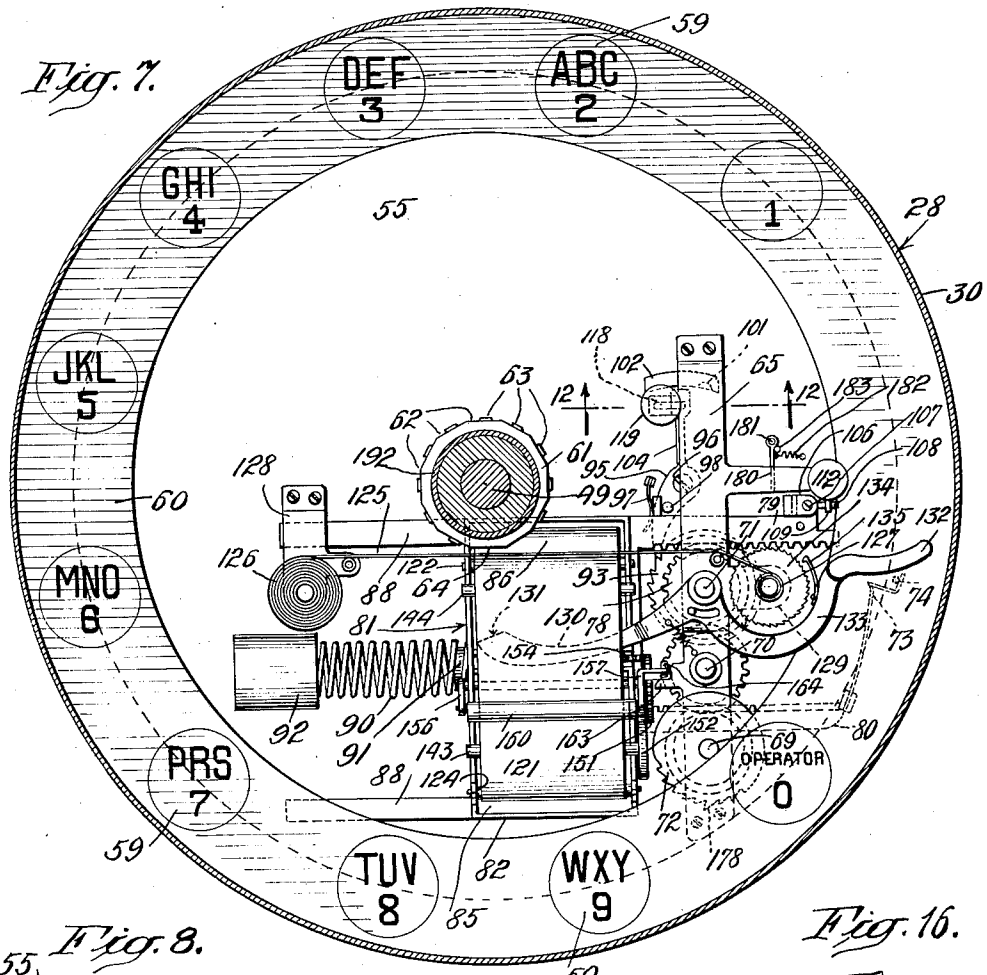

Fig. 8.

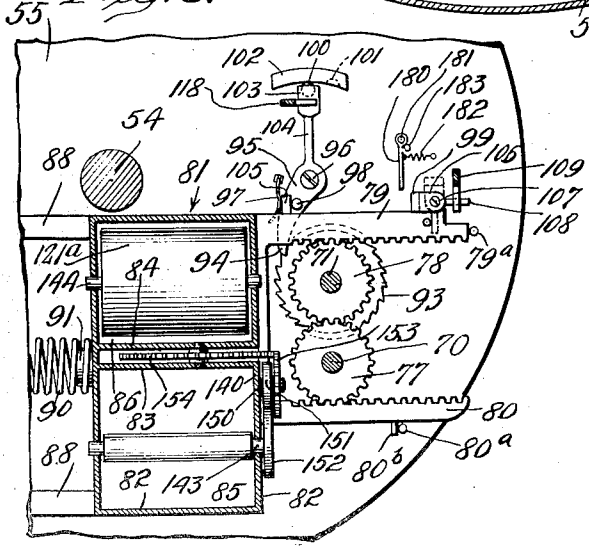

Fig. 16.

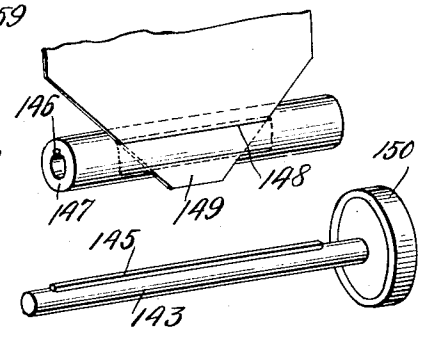

INVENTOR
JAMES F. DEMPSEY
BY Geo. L. Whelbock
ATTORNEY

Feb. 17, 1931. J. F. DEMPSEY 1,793,067

RECORDING DEVICE

Filed Aug. 6, 1926 6 Sheets-Sheet 4

Fig. 9.

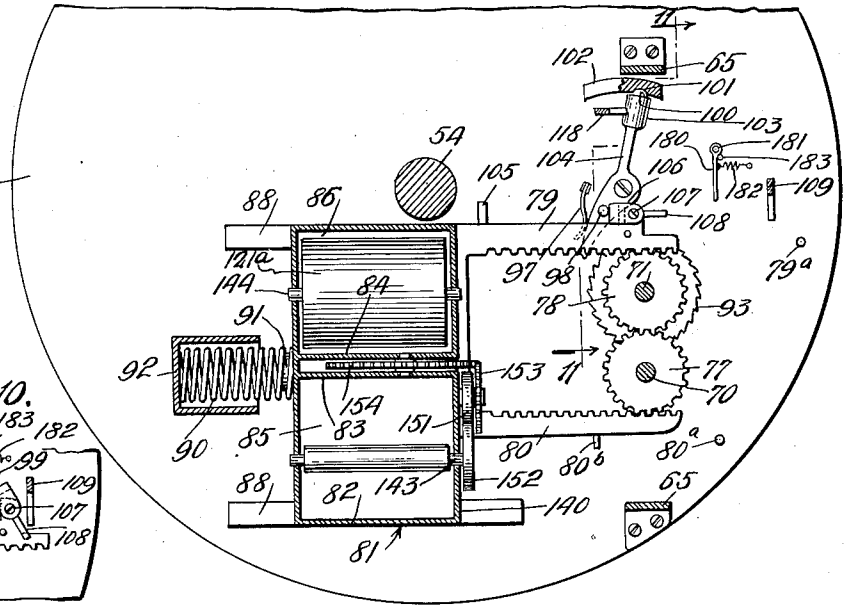

Fig. 10.

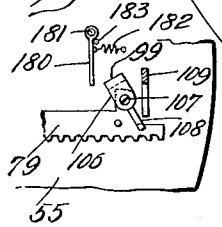

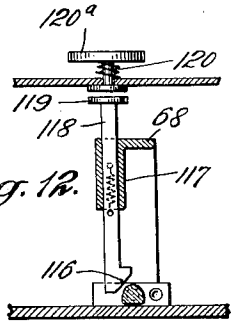

Fig. 12.

Fig. 11.

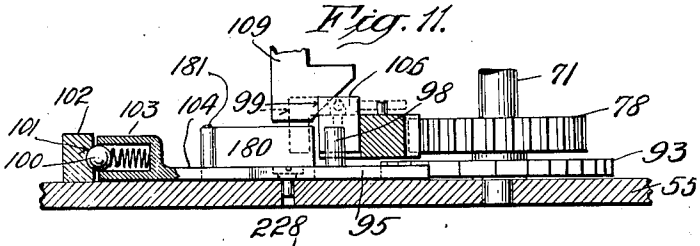

Fig. 18.

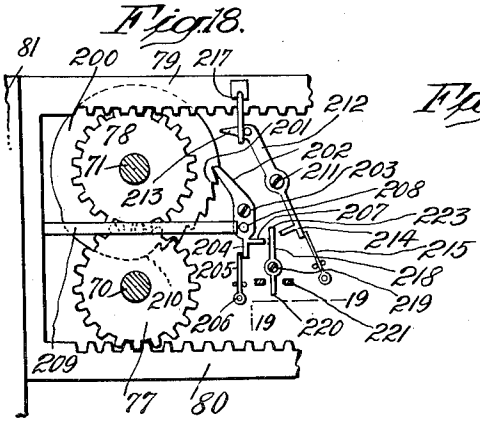

Fig. 19.

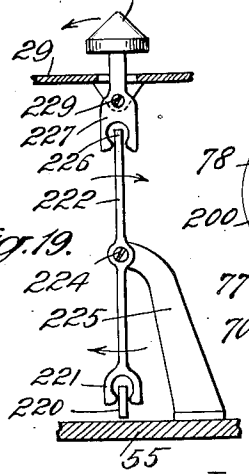

Fig. 20.

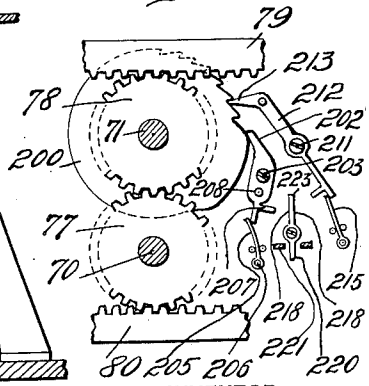

INVENTOR

JAMES F. DEMPSEY

BY

Geo. I. Wheelock

ATTORNEY

Feb. 17, 1931. J. F. DEMPSEY 1,793,067

RECORDING DEVICE

Filed Aug. 6, 1926 6 Sheets-Sheet 5

Fig. 13.

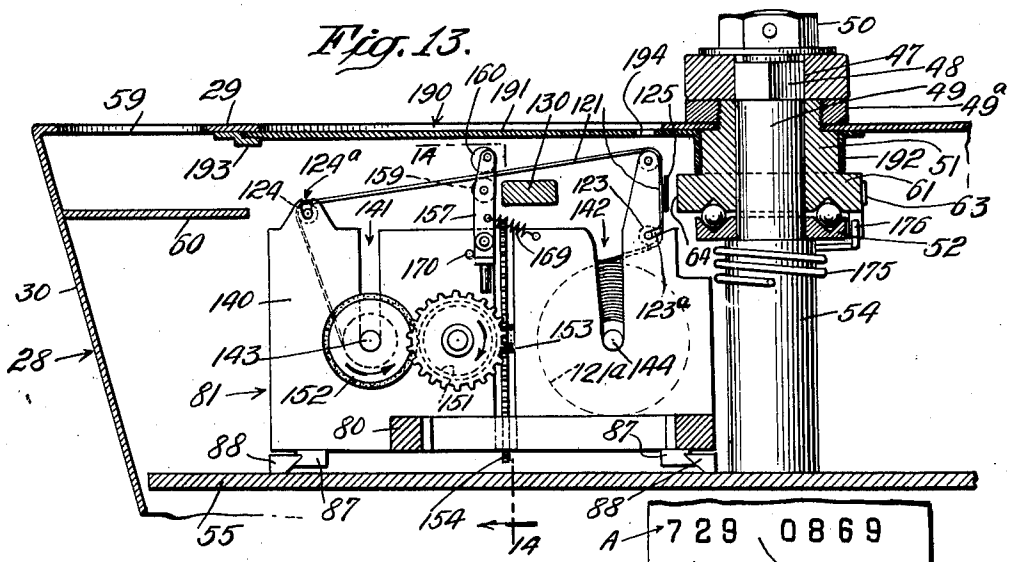

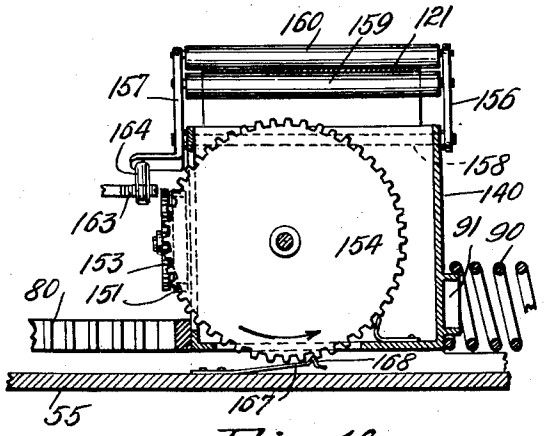

Fig. 14.

Fig. 17.

A →	7 2 9	0 8 6 9
B →	3 0	
C →	7 2 9	0 8 6 9
D →	7 2 4	5 8
E →	7 2 4	0 5 8 7
F →	5 3 5	0 8 6 9
G →	9 4 5	0 3 2 1 9
H →	4 6 8	9 8 9 1 5
I →	0 0 7	1 5
J →	7 2 9	0 8 6 9
K →	1	
L →	7 2 9	0 8 6 9
M →	2 0	
N →	2 1 1	

177

121

Fig. 15.

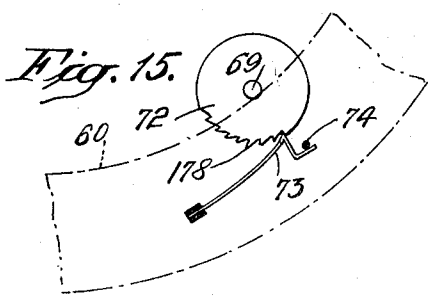

INVENTOR
JAMES F. DEMPSEY
BY
Geo. Inwheelock
ATTORNEY

Feb. 17, 1931. J. F. DEMPSEY 1,793,067

RECORDING DEVICE

Filed Aug. 6, 1926 6 Sheets-Sheet 6

Fig. 21.

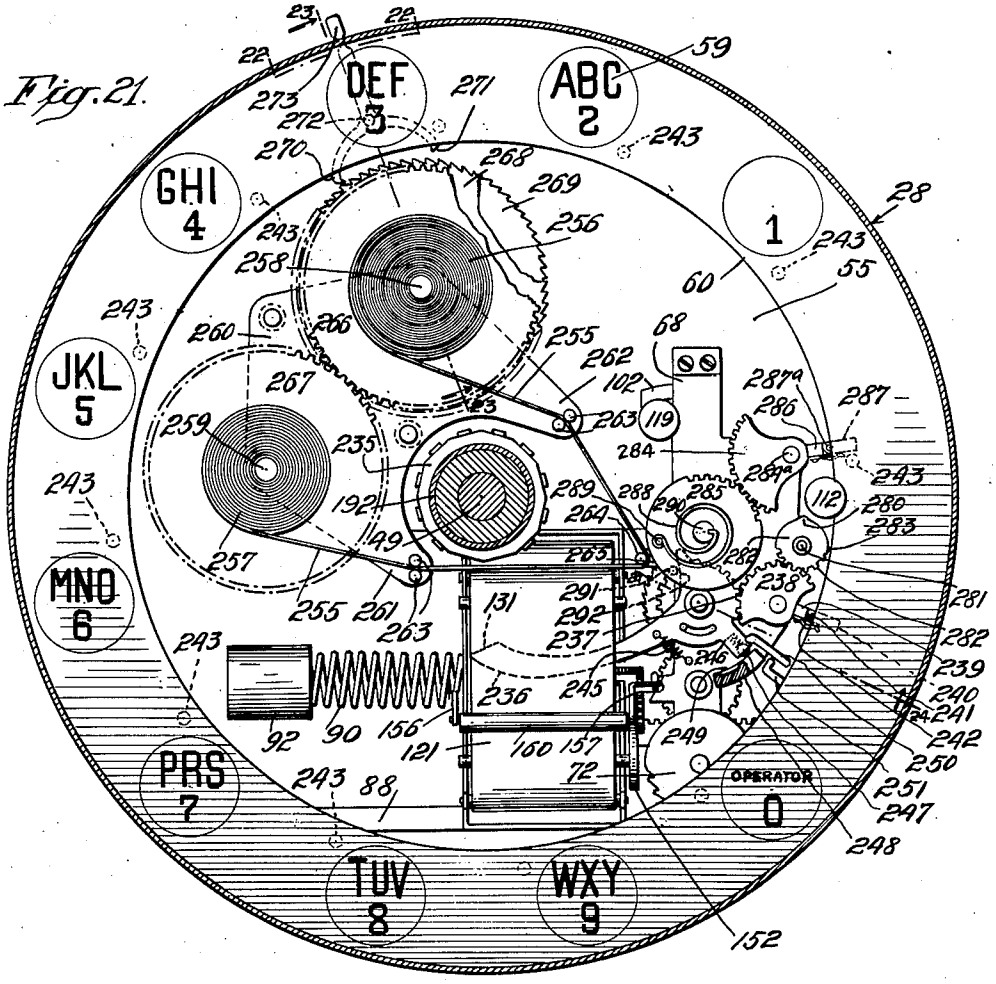

Fig. 22.

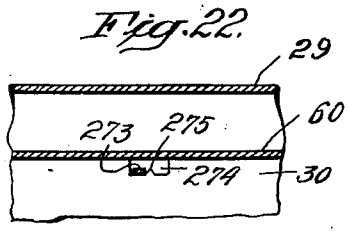

Fig. 23.

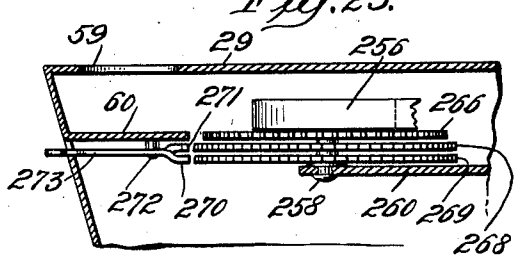

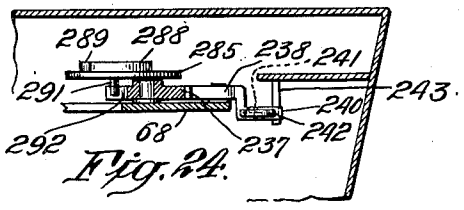

Fig. 24.

INVENTOR
JAMES F. DEMPSEY
BY Geo. S. Wheelock
ATTORNEY

Patented Feb. 17, 1931 1,793,067

UNITED STATES PATENT OFFICE

JAMES F. DEMPSEY, OF NEW YORK, N. Y.

RECORDING DEVICE

Application filed August 6, 1926. Serial No. 127,713.

This invention relates to improvements in recording devices, and has particular reference to such devices which are especially adapted for recording telephone service in connection with automatic telephones.

As is well known to those skilled in the art, automatic telephones are being extensively used, and such installations are increasing in number with prospects of supplanting the central switchboard operator. With such automatic telephones, the subscriber manipulates a suitable controlling switch mechanism which is mounted with or adjacent to his individual telephone, and thus he initiates the automatic signal for the party with whom he wishes to speak. The calls made are recorded or counted in the central station, but there has been no way for the subscriber to check up on bills rendered, and this condition has given rise to disputes. The present invention contemplates the provision of means associated with the subscriber's instrument for recording service on that particular telephone line, and it may be applied by the manufacturer as an integral portion of the instrument, or it may be furnished as a separate unit which may readily be attached to such instruments as are already in use.

An important object of the invention is to provide a recording mechanism for use with automatic telephones whereby a permanent record is obtained of the automatic calls made on that particular instrument.

Another object is to provide such a device which will be mechanically actuated as the desired number is called, and wherein the record may be marked by the subscriber to indicate a misconnection, or inability to get a call through.

Another object is to provide such a device with a printing mechanism and a strip of paper preferably in roll form, upon which successive calls may be recorded and wherein the paper will be automatically fed to a new position after each printing operation.

Another object is to provide such a device with a paper carriage which is intermittently movable as the successive digits of a number are printed, and wherein said carriage will be automatically returned to its original position after a record has been made.

Another object is to provide such a mechanism which will be enclosed in a casing whereby the parts are amply protected, yet readily accessible for purposes of inspection, adjustment or repairs.

Another object is to provide such a device with novel means for connecting a rolled strip of paper, whereby said paper may be easily removed and replaced as desired.

Another object is to provide such a device with a strip of paper whereon the successive operations of the telephone will be recorded, the paper having a plurality of spaced markings to facilitate counting the number of recorded calls.

Another object is to provide such a device wherein the operative mechanism is contained within a protective casing, a portion of which is so formed as to provide a vision slot, and wherein the end of the paper strip, and the ends of the ink ribbon are differentiated from their respective body portions and visible through said slot to warn the subscriber of the necessity for changing the paper or reversing the ribbon.

Another object is to provide such a device with a self-contained power member for returning the movable parts to original position after they have been manually actuated.

These and other objects and advantages will be readily apparent from the following description, reference being had to the accompanying drawings, wherein several embodiments of the invention are shown by way of illustration, and wherein

Fig. 1 is a side elevation of one form of the invention shown as applied to a telephone of the "desk" type;

Fig. 2 is a top plan view thereof;

Fig. 3 is a vertical transverse sectional view through the recording unit, per se, the section being taken on the line 3—3 of Fig. 2;

Fig. 4 is a vertical transverse sectional view through the unit casing and showing the internal mechanism in elevation;

Fig. 5 is a transverse sectional view looking downwardly on the line 5—5 of Fig. 4;

Fig. 6 is a fragmentary sectional view on

line 6—6 of Fig. 5, illustrating more clearly how the detachable recording unit may be related to the standard operating dial of an automatic telephone;

Fig. 7 is a transverse sectional view looking downwardly on line 7—7 of Fig. 4 and showing the parts in their positions of rest prior to a printing operation;

Fig. 8 is a fragmentary view similar to Fig. 7 with parts of the mechanism omitted and the paper carriage compartments shown in section;

Fig. 9 is a view similar to Fig. 8 and showing the paper carriage and its associated parts as fed over to the end of a printing line and immediately prior to its automatic return;

Fig. 10 is a fragmentary detail view of the cam mechanism for defining the position of the last digit of a printing line;

Fig. 11 is an enlarged detail view partly in elevation and partly in section on the line 11—11 of Fig. 9;

Fig. 12 is a vertical sectional detail view of the releasing mechanism for the carriage-returning pawl;

Fig. 13 is an enlarged vertical sectional view through the casing and its central bearing, and showing the paper feeding mechanism more clearly in side elevation;

Fig. 14 is a vertical longitudinal sectional view through the paper carriage on line 14—14 of Fig. 13, and showing the paper feeding mechanism in rear elevation;

Fig. 15 is a detail view of the ratchet and pawl whereby motion is intermittently communicated to the carriage feeding mechanism;

Fig. 16 is a detail perspective view of one of the paper-roll shafts and a paper spool adapted to be used therewith;

Fig. 17 is a fragmentary face view of a piece of paper having various records printed thereon;

Fig. 18 is a fragmentary view of a modified form of carriage feeding mechanism;

Fig. 19 is a detail view of an operating key and connections for controlling the last digit position in a line of printing;

Fig. 20 is a view similar to Fig. 18, showing the parts in position after the carriage has been letter-spaced and with the supplemental pawl in engagement with the ratchet;

Fig. 21 is a view similar to Fig. 7, illustrating a modified form of printing mechanism and ribbon reversing means;

Fig. 22 is a fragmentary sectional view on line 22—22 of Fig. 21;

Fig. 23 is a fragmentary sectional view on line 23—23 of Fig. 21;

Fig. 24 is a vertical transverse sectional view on a line 24—24 of Fig. 21 and

Fig. 25 is a fragmentary face view of a strip of paper.

By way of illustration the invention has been shown as embodied in a complete unit which may be readily attached to and detached from the operating mechanism of a standard automatic telephone, and more particularly has been shown as applied to an instrument of the desk type. Such a telephone instrument includes a base 20 and an upwardly extending transmitter post 21. Disposed upon or within the base 20, as is well known to those skilled in the art, is a switching mechanism (not shown) which initiates the automatic signal for the station or "number" being called, said switching mechanism being manually operable by means of a rotatable plate or impulse dial (Fig. 5) 22, having a plurality of finger holes 23 which normally register with suitable indicia 24 on a stationary dial. The plate 22 is concentrically mounted for rotation on a low cylindrical casing 25 which in turn is secured in any suitable manner to the base 20, and by way of limiting the movement of the plate 22, a stop member 26 is secured to the side of said cylindrical casing 25 and provided with a curved portion 27 which extends inwardly above the plate 22.

The mechanism of the improved recording device is disposed within a protective casing 28, the major portion of said casing being rotatably mounted and constituting a turntable by which the impulse dial 22 of the telephone may be operated. The rotatable portion of the casing 28 includes an upper wall 29 and a downwardly extending skirt portion or side wall 30, which terminates at its lower end in an inwardly extending flange 31, said flange being partially received in a groove 32 of a stationary clamping ring 33. The clamping ring 33 preferably surrounds the cylindrical casing 25 of the standard telephone switch mechanism, and may be in the form of a split ring, as clearly shown in Fig. 1, said ring having its meeting ends provided with lugs 34 for engagement by a screw 35 and cooperating nut 36, whereby the said clamping ring is firmly held in place. By way of supplementing the support of the recording device a bracket member 37 is secured in any suitable manner as at 38 to the clamping ring 33 and includes an upwardly extending arm 39 which is inwardly deflected as at 39*a* above the top wall 29 of the casing 28 and having its inner extremity enlarged as at 40 and centrally disposed with respect to the casing 28 and the impulse dial 22. The arm 39*a* constitutes an abutment for the finger or instrument by which the dial is operated, and thus limits the movement of the dial in the manual stroke in a manner and degree like the curved stop 27 of the standard instrument. Also, if desired, the arm 39*a* may be arched intermediate its ends to provide clearance for the passage of buttons 115 and 120*a* which will be more fully described hereinafter. A laterally extending arm 41 may preferably be

formed integrally with the arm 39 and suitably curved as shown in Fig. 2 to partially coextend with the curved side wall 30 of the casing 28 and terminating in a semicircular portion 42 for engaging the transmitter post 21 of the telephone. Hinged to the portion 42 as at 43 is another semicircular member 44 which engages the opposite side of the post 21 and is firmly clamped in opposition to the portion 42 by means of a screw 45 and nut 46.

The enlarged extremity 40 of the inwardly extending arm 39*a* is provided with a substantially square aperture 47 (Figs. 3 and 13) in which is fitted the square end 48 of a bearing post 49, said post being held in place by means of a lock nut 50 which is disposed above the enlarged end 40 of said arm. The post 49 forms a support for a ball race 51 which is carried by the turn-table 29 and secured thereto by a clamping nut 49*a*, said ball race 51 co-operating with a second and suitable ball race 52 and being separated therefrom by antifriction elements 53 as will be obvious. Below the ball race 52 the post 49 is of an enlarged diameter as indicated at 54 and it carries at its lower end a stationary platform 55 which forms a mounting base for certain portions of the mechanism as will hereinafter be described.

It will be evident from the foregoing that the casing 28 is mounted for free rotation coaxially with the impulse dial 22 and that the platform 55 is held in fixed position by virtue of the square portion 48 of the supporting post, the complete structure being such as to provide substantial mechanical support and at the same time being conducive to economical manufacture. If desired, the clamping ring 33 may be suitably formed with an annular flange 56 of substantial proportions, such as to assist in the support of the casing 28 by engagement with the lower wall or flange 31 as is best shown in Figs. 3 and 4.

Secured to the side wall 30 of the casing 28, as best shown in Figs. 5 and 6, is a yieldable arm 57 which is normally in radial alignment with the last finger hole 23 of the impulse dial 22 and said arm 57 is provided at its free end with a depressed portion 58 which constitutes a button for reception within said finger hole 23. In this manner, the casing 28 is held against rotation with respect to the impulse dial 22. The upper wall 29 of the casing 28 is provided with a plurality of finger holes 59 (Figs. 2, 7, 21) preferably ten such finger holes being used and they being spaced correspondingly with the finger holes 23 in the standard dial 22. Spaced below said top wall 29 and preferably secured to the side wall 30 of the casing 28 is an annular transverse wall 60 (Figs. 3, 4, 7, 13) upon which the suitable indicia for identification of the various finger holes 59 may be imprinted. It is, of course, understood that the finger holes 59 are adapted to define operative movements of different lengths of the impulse dial 22 and each of such finger holes having numerical values from 1 to 10, as well as alphabetical indicia. Thus, in using the device, a telephone number may be automatically transmitted to the central station and thence communicated to the party desired by successively moving the casing 28 and dial 22 through the proper arcuate strokes as defined by the digits in the number desired, and after each such operation, permitting the device to return to its original position of rest as shown in Fig. 2. This operation will be described in greater detail hereinafter.

The ball race 51 is provided with an enlarged portion 61 whose outer periphery is in the form of a regular polygon as best shown in Fig. 7, said polygon comprising a plurality of straight side portions 62, ten of which are formed with suitable type elements 63 which correspond with the numerals designating the various finger holes. These type elements 63 are not radially alined with their corresponding finger holes 59 but are necessarily angularly offset with relation thereto in such a manner that when the turn-table 29 is rotated to its stopped position as defined by the finger stops 27 and 39*a*, the type 63 which defines the extent of such movement will be in a position for printing. In the embodiment of the invention illustrated in the drawings, the printing position is directly in front of the post 49 as indicated by the reference character 64 in Fig. 7.

Secured to the platform 55 is a bracket member 65 (Fig. 4) which may be formed in any suitable manner and preferably comprises leg portions 66 and 67 which are connected by a bridging member 68. Journaled in said bridging member 68 are three shafts 69, 70 and 71, the shafts 70 and 71 extending downwardly to the platform 55 wherein their lower ends are journaled (Fig. 4). The shaft 69 is provided with a segmental ratchet member 72 (Figs. 4, 7 and 15) which is preferably disposed immediately below the annular transverse wall 60, the teeth of said ratchet being engageable by a yieldable pawl 73 which is carried by the side wall 30 of the casing 28 and being limited in its free movement by means of a pin 74 projecting downwardly from the annular wall 60. The pawl 73 is normally out of engagement with the ratchet 72 and the arrangement is such that when the turn-table 29 is rotated the pawl 73 is moved a slight distance beyond said ratchet and upon the return stroke, said pawl 73 engages a tooth of the ratchet 72 and partially rotates the shaft 69 through a predetermined angular distance. Also, secured to the shaft 69 and adapted for rotation with the ratchet 72 is a gear 75 which is preferably disposed below the bridging member 68 and meshing with a similar gear 76 on the shaft 70. In this manner, rotary motion of the ratchet 72 is trans-

mitted through the gears 75 and 76 to a second set of gears 77 and 78 which are respectively mounted upon the shafts 70 and 71. Each of the gears 77 and 78 (Fig. 8) is adapted to mesh with one of a pair of opposed rack members 79 and 80 (Figs. 4, 7 and 8) which are secured in any suitable manner to a paper supporting carriage 81 and by which said carriage is intermittently fed as the instrument is operated.

The carriage 81 preferably includes a sheet metal casing 82 (Figs. 3 and 8) which is centrally divided by partition walls 83 and 84 to provide a pair of paper roll compartments 85 and 86 and said casing may preferably be formed on its lower surface with dove-tail members 87 for engagement with suitable guiding strips 88 which are secured to the platform 55. The guides 88 are disposed parallel to each other as well as parallel to the plane of the printing surface 64 in such a manner as to guide the paper carriage longitudinally as it is propelled by the gears 77 and 78 and the racks 79 and 80. In such movement, the paper carriage 81 is propelled against the action of a compression spring 90, one end of which bears against the carriage as at 91 while its other end is fixed against or within a stationary block 92 mounted on the platform 55. In order to maintain the paper carriage in its successive printing positions, a ratchet 93 is mounted for rotation with the gear 78 on the shaft 71 and the teeth of said ratchet 93 are engaged by the nose 94 of a pawl 95 which is pivoted to the platform 55 at 96, and which is normally forced against the teeth of the ratchet by a flat spring 97 as best shown in Figs. 7 and 8. Thus the engagement of the pawl 95 with the ratchet 93 prevents reverse movement of the carriage under the action of the compression spring 90 until such time as it is desired to return the carriage to its initial position. In making an ordinary telephone call, the impulse dial 22 is usually operated seven times, the first three movements giving the combination which controls the central station called and the last four movements giving the particular number of the line desired in that central station. It is therefore necessary that the paper carriage 81 be successively moved seven times in order to complete a record of a call and at the end of the last operation the carriage 81 is automatically returned to its original position.

In order to accomplish said automatic return of the carriage 81, the pawl 95 is provided with an upstanding pin or projection 98 which is disposed in the path of movement of an abutment 99 carried adjacent to the outer end of the rack 79. As the carriage 81 is then progressively fed, the abutment 99 will, after the seventh operation of the impulse dial, come in contact with the projection 98 (Fig. 9) and thus move the pawl 95 about its pivot 96 in such a manner as to disengage the nose portion 94 from the teeth of the ratchet 93. When the pawl and ratchet are thus disengaged, the coil spring 90, which has been compressed, is free to return the carriage to its original position and during such return movement, the pawl 95 is maintained out of engagement with the ratchet 93 by means of a spring pressed detent 100 engaging within a recess 101 in an arcuate guide 102 which is secured to the platform 55. The detent 100 may preferably be in the form of a steel ball which is received in the socketed end 103 of an extension arm 104 carried by the pawl 95 (see particularly Figs. 8, 9 and 11). The rack 79 is further provided with a projecting pin 105 which is adapted to engage the projection 98 of the pawl upon the return stroke of the carriage 81 and to thereby return the pawl to its original position in engagement with the ratchet 93 and under the influence of the spring 97.

In some instances, it is necessary to operate the impulse dial eight times in calling a station, for example, when the party desired is one branch of a party line, in which instance the designating number is followed by a letter. In order therefore to be able to space the carriage 81 for an additional digit in the record, the abutment 99 may preferably be made adjustable. In the drawings, the abutment 99 has been shown as comprising a substantially rectangular block 106 which is shown in its normal position in full lines in Figs. 7, 8 and 9, it being rotatable about a pivotal center 107 and carrying a projecting arm 108 by means of which it may be selectively set to what may be termed the eighth-letter position. The block 106 is greater in length than in width, the difference between these two dimensions being equivalent to a letter space as required of the carriage 81, and from this it will be apparent that when the block 106 is turned through an angle of 90° to a position as indicated by dotted lines in Fig. 8, its abutment with the projection 98 of the pawl 95 will require the movement of the carriage 81 to an additional printing position. The movement of the block 106 to such adjusted position may be accomplished by means of a vertically movable cam rod 109 best shown in Fig. 4, said cam rod having an inclined cam surface 110 which is adapted to engage the projecting arm 108 of the block and thus upon depression of the cam, rotate the block 106 about its pivotal center 107. The cam rod 109 may be guided for vertical movement in a tubular guide 111 carried by the lower side of the bridging portion 68 and said cam rod extending above the bridging portion and preferably provided at its extremity with an enlarged flat head 112 which is slightly spaced below the upper wall 29 of the turn-table. A small coil spring 113 may be provided under tension for main-

taining the cam rod 109 in its normal uppermost position, said spring having one of its ends anchored to the tubular guide 111 and its other end secured to the cam rod 109. For the purpose of operating said cam, the upper wall 29 of the casing 28 is provided with a spring retracted plunger 114 which has at its upper extremity a finger engaging button 115 and which is normally in axial alignment with the cam rod 109 when the casing 28 is in its position of rest. When it is desired to use the instrument in calling a number with eight digits, the button 115 is first depressed in order to throw the block 106 to its adjusted position as previously explained, and thereafter, the automatic connection may be initiated by movement of the casing 28 in the usual manner.

In some instances, it is desirable to return the carriage to its initial position after it has been propelled through a portion of its stroke but prior to the completion of a call and for this purpose, a cam 116 (Fig. 12) of similar design to the cam 110 is also mounted for substantially vertical movement with a cam rod 118 in a tubular guide 117 of the bridging member 68. The cam 116 is adapted to engage the socket portion 103 of the pawl arm 104 and the upper extremity of the cam rod 118 is fitted with an enlarged head 119 and actuable by means of a spring retracted plunger 120 and finger piece 120[a] similar to the members 114 and 115 respectively. Thus the pawl 95 may be at any time manually disengaged from the ratchet 93 by depression of the finger piece 120[a] while the turn-table is in its normal position of rest and such depression of the button 120[a] will cause the cam 116 to operate against the socketed portion 103 of the pawl arm and cause the same to be moved about the pivotal center 96.

As the carriage returns, under the influence of spring 91, its movement is arrested by stop pins 79[a] and 80[a] (Fig. 8), the pin 79[a] being engaged by the end of the rack 79, while the pin 80[a] is engaged by a projection 80[b] carried by the rack 80. These stop members may be formed of suitable resilient material, or resiliently mounted, in such a manner as to absorb the shock of the impact.

A roll of paper 121[a] (Figs. 3, 9, 13) is mounted within the paper compartment 86 of the carriage 81 and from this roll a web of paper 121 is carried upwardly over a pair of spaced rollers 122 and 123 to a printing position in front of the type ring 61 and thence over another guide roller 124 from which it is rolled on a suitable core in the compartment 85. The ends of the roller 123 are disposed in slots 123[a] in the side walls of the casing 82, and the ends of the roller 124 are similarly mounted in slots 124[a], this arrangement facilitating insertion and removal of the paper. Disposed between the web 121 and the type ring 61 is an ink ribbon 125 which may be of any suitable form and diagrammatically shown in Fig. 7 as extending longitudinally from an unwinding reel 126 to a winding reel 127. Said reels 126 and 127 may be supported in any suitable manner upon the platform 55 such as by the use of a sheet metal bracket 128 for the reel 126 and of an extension ear 129 of the bracket 65 for the reel 127.

It will be evident from the foregoing that a strip of paper is positioned in close proximity to the printing point 64 of the type ring 61 and that impressions from said type surfaces may be made upon said paper by pressing the paper and the ink ribbon against said surfaces. To this end, a printing hammer 130 (Fig. 7) is pivoted concentrically with the shaft 71 and upon the upper side of the bridging member 68 said printing hammer being disposed in a plane above that of the annular flange or wall 60 of the casing 28. The inner extremity of the hammer 130 is formed with a substantially flat surface 131 which is adapted to engage the paper and press the same toward the printing surface while the opposite end of said hammer is formed with a finger piece 132 by which the hammer may be actuated as the turn-table is manually rotated. The finger piece 132 may be carried by a curved portion 133 which is so formed as to provide clearance for the winding reel 127 of the ink ribbon. If desired, automatic feeding means may be provided for progressively feeding the ink ribbon 125 from the reel 126 to the reel 127 and for this purpose, a ratchet 134 has been shown as concentrically mounted for rotation with the reel 127 and engageable by the extremity of a spring finger 135 which is carried by the curved portion 133 of the printing hammer. In this manner, the ratchet 134 is partially rotated during each printing stroke of the hammer 130 and thus a clean ink ribbon surface is assured at the printing position at all times.

Referring again to the structure of the paper carriage 81 and its associated parts, it is to be understood that the paper roll 121[a] must be capable of being easily removed and replaced. The opposite side walls 140 (Figs. 3 and 13) of the casing 82 are therefore preferably formed with a pair of downwardly extending notches 141 and 142. The bottoms of the notches 141 and 142 form bearings for a pair of shafts 143 and 144 respectively, one of said shafts being shown more clearly in detail in Fig. 16. In this figure the shaft 143 is shown as being cylindrical and of sufficient length to extend longitudinally through the casing 82 and may preferably be provided with a rectangular key 145 which is adapted for reception in a groove 146 of a tubular mandrel or bobbin 147. The mandrel 147 is preferably formed with a slot 148 which extends longitudinally through its material

at one side thereof in such a manner as to be capable of receiving the tapered end 149 of the strip of paper which constitutes the roll 120. Journaled in one of the side walls 140 of the paper compartment 85 is a stub shaft 150 (Figs. 8, 9) carrying a friction wheel 151 which is adapted to contact with a similar friction wheel 152 carried by the shaft 143, and mounted for rotation with the friction wheel 151 is a pinion 153 formed of relatively thin material and meshing with a gear 154, which is rotatably mounted perpendicular to the pinion 153 and between the partition members 83 and 84 of the casing 82. The edge of the gear 154 projects partially through a slot in the side wall of casing 82, and also through a similar slot in the bottom wall (Fig. 14).

It is obviously necessary that the paper web be fed or line spaced after each printing operation and to this end a paper feeding mechanism is provided as best shown in Figs. 7, 9, 13 and 14. Such a feeding mechanism preferably includes a pair of upwardly extending arms 156 and 157, which are disposed at opposite sides of the casing 82 and being pivotally mounted upon a shaft 158. A pair of paper engaging rollers 159 and 160 extend between the free ends of said arms 156 and 157, the roller 159 being of concentric cylindrical form and disposed immediately below the web portion 161 of the paper while the roll 160 is of cylindrical form but eccentrically mounted in said supporting arms. The construction and disposition of the paper feeding rolls is such that rocking movement of the arms 156 and 157 about the axis of the shaft 158 causes the eccentric roll 160 to exert a pressure upon the paper web 161 against the concentric roll 159, and such pressure being sufficiently great to pull the paper from the roll 120 on a shaft 144, and to feed it over the guide roll 124 toward the shaft 143. The desired rocking movement of the arms 156 and 157 may be obtained by means of an inclined cam surface 163 which is formed on the bridging portion 68 of the supporting bracket, said cam surface being disposed in the path of travel of an extension pin 164 which depends from the arm 157 as best shown in Figs. 13 and 14. Thus as the carriage 81 is returned to its normal position of rest after a printing operation, as has been previously described, the extension pin 164 strikes the cam surface 163 (Fig. 7) and causes the arm 157 to rock about the axis of the shaft 158, moving the rollers 159 and 160 in a direction away from the type ring 61. At the same time as the carriage returns and said cam action takes place, the gear 154 is engaged by a spring 167 having an off-set and yieldable extremity 168 which engages one of the teeth of said gear, causing partial rotation. The rotation of said gear 154 is communicated through the pinion 153 and friction wheels 151 and 152 to the shaft 143 by which the slack in the paper is taken up, it being wound about the tubular mandrel 147 on said shaft 143. After said paper feeding cam action has taken place, the supporting arms 156 and 157 are returned to their normal vertical position by the action of a tension spring 169, said arms being limited in such movement by abutments 170 extending from the side walls 140 of the casing.

It is thought that the operation of the recording mechanism will be entirely clear from the foregoing description but in order to prevent any ambiguity in the disclosure, the operation will be again gone over with specific reference to a plurality of records as indicated upon a strip of paper in Fig. 17.

On the first line of the record sheet in Fig. 17 appears the legend "729—0869" which is the printed record for a telephone call to "Raymond 0869". Such a call may be initiated through the instrument by first inserting a finger, pencil or other instrument in the finger hole 59 which is designated by the numeral 7 and rotating the casing 28 in a clockwise direction until such rotation is arrested by the proper stop mechanism. During such movement the finger or pencil disposed in the proper finger hole 59 comes in contact with the finger piece 132 of the printing hammer and moves it pivotally about its center 71 in such a manner that the substantially flat surface 131 of the hammer head presses the paper web 121 and the ink ribbon 125 against that type element 63 which is in the printing position 64. At that time the effective type element 63 is the numeral "7" which is imprinted upon the paper. The casing 28 is then permitted to return to its original position, said return movement being possible by virtue of the spring 175 which surrounds the post 54 and has one of its ends anchored to said post while its other end is attached to the print ring 61 as shown at 176 in Fig. 13. Simultaneous with the action of spring 175 in returning casing 28, the usual spring contained within the cylindrical casing 25, of the standard telephone switching mechanism, will return the rotatable plate 22 or impulse dial with its finger holes 23 into one of which, and preferably the last hole marked "0" and commonly known as No. 10, is depressed button 58. The operation is then repeated with the exception that the finger holes 59 which are designated by the numeral indicia 2 and 9 are successively used to define the lengths of the operative strokes desired. Preferably a blank space is left between the code designation of the station called and the number of the party line in that station, such space being indicated at 177 in Fig. 17, and being obtainable by virtue of a tooth 178 of greater length than the remaining teeth in the ratchet 72. Thereafter the proper finger holes 59 are successively

used in the well known manner in communicating the number "0869", and at each of these operations of the turn-table the corresponding impression is made upon the paper by the striking of the hammer 130. Also on each return movement of the turn-table the carriage 81 is progressively fed to present a new portion of the paper to the printing position for impression on the subsequent stroke of the hammer.

It is of course understood that only one central station can be called with a particular group of figures, and the subscriber may have a tabulation of the various central stations obtainable with his instrument, and their corresponding code symbols, whereby he may readily identify the records imprinted by the mechanism of the invention.

Thus, as the instrument is operated to initiate a telephone call a complete and readily legible record of the same is imprinted upon the paper. At the end of each of such printing operations the paper carriage 81 is automatically returned to its original position as has previously been described and at the same time the paper is line-spaced in order to present an unused portion thereof to the printing position in front of the type ring 61.

It is desirable that the subscriber should be able to readily distinguish the chargeable calls listed upon the record sheet from those for which he should not be charged, and for this purpose it is possible with the present mechanism to supplement a recorded number with a suitable code symbol indicating that the preceding call should not be charged to his account. For example, when a certain number is called and a connection is obtained with some other number which is not desired, the subscriber may hang up his receiver and partially rotate the turn-table using, for example, the third finger hole by means of which the numeral 3 is imprinted upon the record sheet immediately below the number called as shown in the line B in Fig. 17. The subscriber then removes the receiver and rotates the turn-table by means of the last finger hole which is designated by "0" and which is a standard call for the central operator. The operator may then be informed of the unsuccessful attempt to call "Raymond 0869" whereupon the said operator is requested to issue the usual credit for the subscriber's account. In this manner the line B contains the number "30" which is the code indicating that the preceding number was called but a misconnection with another number resulted. The paper carriage 81 may then be returned to its initial position thru the instrumentality of the button 120^a and plunger 120 actuating the cam 116 to release the pawl 95, in which event the carriage is returned by the action of the compression spring 90, and the paper again line spaced. Thereafter, the same number may be called again it being recorded on the third line C and in the event that the connection is obtained, the record thereof is complete. In other words, when a telephone number appears upon the record sheet followed by a code symbol it is not chargeable against the subscriber's account, but when a complete number appears without a subsequent code notation it designates a completed call for which the subscriber must pay.

In some instances a person operating the device starts to initiate a call, and after the dialing has been partially completed he realizes that he has made a mistake in the number. The record of such a condition appears in lines D and E in Fig. 17, the line D being incomplete, lacking two digits in the number, while the line E is for the corrected call which is chargeable to the subscriber, because it has the required 7 digits and no code symbol following it.

In line F of Fig. 17 a record of another complete and chargeable call is indicated by the number "535—0869" in which case "535" designates the name of the station "Kellog", (5 being dialed for K, 3 being dialed for E, 5 being dialed for L).

In lines G and H of Fig. 17 appear two chargeable records for party line calls, the numbers of such calls differing from the others by the additional digit at the end which corresponds with the letter designation of the party line called. In effecting such a connection the button 115 is first depressed while the turn-table is in its normal position of rest, and thereby the block 106 constituting the ratchet release is rotated thru an angle of 90° in such a manner as to permit the eighth-letter spacing of the carriage 81 prior to the release of the pawl 95 from the ratchet 93, thereafter the desired party line may be called and the record made in the usual way.

In order to reset the block 106 to its normal seven-letter position a finger 180 is pivoted at 181 to the platform 55 in such a manner that its free end is disposed in the path of movement of said block 106 (see Fig. 8). The finger 180 is under the influence of a tension spring 182 which normally tends to draw the free end of said finger in the direction of the block 106, said finger being restrained from movement past a stop pin 183, but free to move in a direction away from the same. When the block has been shifted to its eighth-letter position the free end of the finger 180 is engaged by said block 106 and forced out of its path as the carriage 81 is successively letter spaced, and upon the return stroke of the carriage the opposite side of the block 106 is engaged by the extremity of the finger 180 and swung about its pivot 107 by virtue of the fixed position of said finger 180 and the stop pin 183.

Referring again to Fig. 17 it will be seen that lines J and K respectively contain number "729—0869" and "1". This indicates

that the number of line J was called by the subscriber but that no answer was received or that the line was busy, and therefore a number followed by such a code designation immediately indicates that that call should not be charged for. And because no telephone connection was made with any other subscriber, it is not necessary to so inform the operator by an additional dialing of "0" so the code symbol remains just 1.

In lines L and M the number "729—0869" is followed by the code symbol "20" which will indicate that the number was called, that connection was obtained and that in the course of the conversation and prematurely, the subscriber was by error disconnected from his party. The code 20 therefore indicates that the operator's attention was called to the fact of a disconnection and that the preceding number should not be charged to subscriber's account.

If desired, the record may be dated, by suitably manipulating the impulse dial at the beginning of each day. For example, in line I of Fig. 17, the legend "007 15" appears. This record is made without removing the receiver from its hook, so no connection is made through the instrument with any central telephone station. The two ciphers have no special meaning, being used merely to space the numeral "7" which represents the month, at the left of the space 177, and at the other side of the space is the number "15" indicating the day of the month. The year "26" for example may also be added if desired.

As is well known, long distance calls cannot be dialed with the automatic phones at present in use, and in order to obtain such service it is necessary to call the long-distance operator, who is obtainable by dialing a special number such as "211". The record of such dialing will appear on the paper as in line N, from which the subscriber will know that he made a long-distance call on the date recorded above.

Similarly other code symbols may be adopted by the subscriber to distinguish between charges and credits, and also to designate the reasons for the credits. From this it will be apparent that a complete record may be obtained of the service performed by the instrument, the record being in compact form and readily legible for the purpose of checking up the bills presented by the Telephone Co. The length of the paper strip is arbitrary and may be governed by the average extent of use of the particular instrument in which it is applied, and the paper may be readily removed at desired intervals and replaced by a fresh roll 120.

In order to permit ready access to the interior of the casing 28 the top wall 29 may be provided with a substantially segmental shaped opening 190 (Fig. 2) which is preferably disposed above the major portion of the mechanism within the casing 28 and provided with a suitable door or closure plate 191, which as best shown in Figs. 2 and 13, may be disposed against the inner surface of the top wall 29 and having a central bearing portion 192 adapted to encircle a portion of the ball race 51. In this manner, the closure plate 191 is selectively movable into and out of registration with the opening 190, the outer edge of the plate being supported by one or more angular supporting members 193 which may be secured in any suitable manner to the top wall 29 of the casing. If desired the closure plate 191 may be provided with a longitudinal sight opening 194 positioned as shown in Figs. 2, 3 and 13 above the guide roll 123; and the proportions of the parts and the resultant line spacing of the paper are such that after a number has been called and the carriage 81 returned to its original position the typewritten record last made upon the paper will be visible thru said sight opening 194. Obviously, it will be necessary to reverse the ribbon reels after the ink ribbon 125 has been unwound from the reel 126 onto the reel 127 and in order to give notice to the subscriber that the end of the ribbon is approaching the printing point the extremities of the ribbon may be inked with a different color from that of the main body of the ribbon. In this way, when the subscriber notices a different colored record, for example red, appearing below the sight opening 194, he will understand that the ribbon 125 requires reversal and will govern himself accordingly. Such reversal of the ribbon may be automatically or semi-automatically effected in numerous ways; one of which will be hereinafter set forth.

In Figs. 18 to 20 inclusive, a modified form of "eighth" letter control is illustrated. The paper carriage is partially indicated at 81 and includes the spaced parallel racks 79 and 80 as in the previous embodiment, said racks respectively meshing with the gears 78 and 77, which are operated in the same manner by a ratchet 72 and pawl 73. Mounted for rotation with the gear 78 is a segmental ratchet 200 which is formed with seven teeth 201 normally engageable by a pawl 202 which is pivoted to the platform 55 by means of a screw 203. The end of the pawl 202 which is most remote from the ratchet teeth 201 is provided with an extension 204, one side of which is adapted to be engaged by the free end of a flat spring 205 secured to the platform 55 at 206. Extending at substantially right angles to the portion 204 is an arm 207 by means of which the ratchet may be manually controlled and extending upwardly from the ratchet is a pin 208 which is disposed in the path of movement of an actuating bar 209 carried by the carriage 81. As the carriage is progressively letter-spaced during the dialing of the instrument, the pawl 202

successively engages the ratchet teeth 201 until the "seventh" letter position is reached and at the next movement of the carriage, the nose of the pawl 202 engages a cam surface 210 which forces said pawl outwardly about its pivot 203. In such movement the extension 204 passes beyond the end of the spring 205 and immediately thereafter said spring 205 exerts its influence against the opposite side of said extension 204 to maintain the pawl in disengaged position. Also pivoted to the platform 55 by means of a screw 211 is a supplementary pawl 212 having a ratchet engaging nose 213 at one end and an extension 214 at its other end adapted for engagement with the free end of a spring 215 similar to the spring 205. The rack 78 carries a depending looped portion 217, which is adapted to engage the nose portion 213 of said supplemental pawl and maintain the same out of engagement with the ratchet 200 when the carriage is in its normal position of rest.

Disposed between the springs 205 and 215 is a lever 218 which is pivoted to the platform 55 at 219 and having one of its ends 220 adapted for engagement by the yoked end 221 (Fig. 19) of an actuating lever 222, while its other end 223 is disposed between and adapted to selectively engage either the annular extension 207 of the pawl 202 or 207^a of pawl 212. The actuating lever 222 is pivoted at 224 to a suitable bracket 225 and extends upwardly toward the top wall 29 of the casing 28, its upper extremity 226 being engageable by the bifurcated lower end 227 of a finger button 228, the button 228 is disposed above the top plate 29 and can be tilted about its pivotal center 229 in order to rock the actuating lever 222 to one side or the other.

It will be obvious from the foregoing that as the button 228 is rocked in the direction of the arrow in Fig. 20, the actuating lever 222 will also be rocked in the direction of its arrows and at the same time the lever 218 is rocked about its pivotal center 219 to force the extension 214 of the supplemental pawl against the spring 215 with such force as to cause extension 214 to pass beyond spring 215. As the carriage is thereafter letter-spaced during the dialing operation, the spring 215 exerts its influence upon the opposite side of the extension 214 forcing the nose 213 of the supplemental pawl into engagement with the ratchet teeth 201. The advantage of this modification of the "eighth" letter control resides in the fact that the necessary adjustments can be made at any time during the dialing operation and need not necessarily be made before the dialing is commenced. By rocking the lever 222 and associated parts in the opposite direction, the lever 218 will similarly act against the projection 207, to disengage the pawl 202 from the ratchet 200, and causing the spring 205 to exert its influence on the opposite side of extension 204. In place of the extensions 204 and 214 and the springs 205 and 215, the pawls 202 and 213 may be fitted with spring-pressed detents similar to the ball 100 if desired.

In Figs. 21 to 24 inclusive, another modified form of the instrument has been illustrated, the modification including a ribbon reversing mechanism and a different form of hammer actuating mechanism. The casing 28 is of substantially the same form as that already described and has mounted with it a type ring 235 which is of the same general character as the type ring 61 but is angularly advanced with respect to the various finger holes 59. This angular advancement is necessary because the printing is accomplished as the turn-table begins its return stroke rather than at the end of its manual stroke.

In these views similar reference characters designate parts corresponding with those used in the first embodiment. The bridging member 68 of the supporting bracket 65, which is secured to the platform 55, is fitted with the ratchet 72 and paper carriage feeding mechanism in the usual manner. The printing hammer 236 is, however, of different form from the hammer 130, it being characterized by a segmental gear 237 in place of the finger piece 132, said segmental gear being meshed with another segmental gear 238 which is mounted in any suitable manner between the hammer and the shelf or transverse wall 60 of the casing 28. Extending outwardly from the segmental gear 238 and toward the side wall 30 of the main casing is a radial arm 239 which carries a swinging extension 240 pivoted at 241 and normally held in the position shown in Fig. 21 by means of a spring 242. The extension 240 is disposed in the paths of movement of a plurality of depending pins 243 which are definitely related to the finger holes 59 in such a manner that they will effect the operation of the segmental gear 238 as the turn-table automatically returns to its position of rest after a dialing operation. In other words, as the turn-table is manually rotated in a clockwise direction, the pins 243 strike the projection 240 and deflects it out of their paths and upon the return movement of the turn-table, the first pin 243 coming in engagement with the extension 240 strikes the said extension and rotates the gear 238 by virtue of the fact that said extension 240 is restrained from reverse movement with respect to the arm 239.

It is desirable that the turn-table be temporarily stopped in its return movement at the instant that the hammer strikes the paper. For this purpose, a clutch cam 280 may be employed, said cam being rotatably mounted upon a shaft 281 and actuated by a segmental gear 282 which meshes with the segmental

gear 238. Preferably, the cam 280 may be integrally formed with the segmental gear 282 and of such proportions as to frictionally engage against the inner edge of the turn-table shelf or transverse wall 60 at 283. Another pair of segmental gears 284 pivoted at 284[a] and 285 pivoted at 290 are rotatably mounted as shown in Fig. 21 and constantly meshing with each other, the gear 284 being provided with an arm 286 and an extension 287 pivoted at 287[a] similar to the arm 239 and its extension 240. The pivoted extension 287 is also disposed in the path of movement of the pins 243, it being engageable by the next pin above that which engages the arm 240 in the return stroke of the turn-table. Preferably, the pivoted arm 287 is engaged slightly before the arm 240 is engaged and as a result said arm 287 will be the first one released. A spiral spring 288 is mounted with the gear 285, said spring having one of its ends secured at 289 to the gear while its other end is secured to the shaft 290. As the gear 285 is rotated by the gear 284, the spring 288 is wound up and immediately that the pin passes beyond engagement with the arm 287, the spring 288 returns the gear to its original position. In so doing, a downwardly projecting pin 291 which is carried by the gear 285 strikes against the edge 292 of the segmental gear 237 forcing the hammer 236 through the remainder of its path of movement to strike the paper while the turn-table is stopped by the clutch cam 280. Immediately following the striking of the paper by the hammer the turn-table 28 resumes its return movement by virtue of the fact that the force actuating the cam 280 has ceased to function when the actuating pin 243 which has been in engagement with the arm 240 has passed beyond the point of engagement permitting the spring 175 of the instrument to overcome the binding effect of the clutch cam 280 at the same time that the turn-table 28 resumes its return movement, the impulse dial 22 being fastened to turn-table 28 by depressed button 58 in finger hole 23, the said impulse dial actuated by its own spring power contained in its casing 25 resumes its return movement and hence it will be seen that the impulse dial 22 and the turn-table 28 move simultaneously stopping or starting a movement instantly one with the other. The movements of the various parts can of course be so synchronized as to produce a clear impression of the type upon the paper.

The annular advance of the type ring 235 with respect to the finger hole 59 is such that when the hammer strikes to present the paper to the printing point, the effective type surface will be in a plane parallel to the striking surface of said hammer. As the return movement of the turn-table proceeds, the said pin 243, which has effected rotation of the gear 238, will pass out of engagement with the extension 240 and thereafter the hammer 236 will tend to return to its former position of rest as shown in Fig. 21 by virtue of the tension of a spring 245. Extending radially from the segmental gear 237 is a boss 246 which is socketed similar to the portion 103 of the ratchet control mechanism illustrated in Figs. 9 and 11, for the reception of a spring pressed ball 247 which rides against an arcuate guide member 248. The guide member 248 is provided with an aspherical recess 249 which is adapted to receive the spring pressed ball 247 immediately after the hammer 236 has printed and slightly returned by the pulling force of spring 245. Thus the spring pressed ball 247 serves as a detent to prevent the complete return of the hammer 236 until the turn-table has finished its return stroke. An extension 250 is carried by the boss 246 as clearly shown in Fig. 21 and is adapted to be engaged by an abutment 251 carried by the turn-table wall 60, the proportions being such that the abutment 251 engages the extension 250 immediately before the end of the return stroke of the turn-table and after the last pin 243 has passed the extension 240. In this manner the hammer 236 is returned to its normal position of rest ready for the next operation.

With the hammer operating mechanism just described, it is always possible to obtain a correct record of the telephone number actually called regardless of what finger holes are used in making such a call.

The ribbon reversing mechanism illustrated in Fig. 21 is similar to some of such devices used in connection with typewriting machines. In this form of the invention, the ink ribbon 255 is successively fed between a pair of spools 256 and 257 which may be of any desirable form and rotatably mounted on shafts 258 and 259 respectively. The shafts 258 and 259 may be mounted by means of a bracket 260 which may preferably include arm portion 261 and 262 disposed at opposite sides of the type ring 235 and each of said arms being provided with a pair of ribbon guiding rolls 263. An additional guide roll 264 may be mounted as on an extension 265 of the bridging member 68 and the ink ribbon 255 may extend in front of the printing point between the guide roll 264 and the rolls 263 of the arm 261.

The ribbon spools 256 and 257 are preferably provided with similar gears 266 and 267 said gears being normally in mesh with each other, whereby the two spools are synchronously rotatable in opposite direction and such rotation may be effected automatically as the turn-table is dialed. To this end the spool 256 may be provided with a pair of superimposed ratchets 268 and 269, the teeth of which are disposed in opposite directions as clearly shown in the drawings and said ratchets may

be selectively engaged by pawls 270 and 271 respectively which are connected together and pivoted to the shelf 60 as at 272. Extending outwardly in a radial direction from the pivot 272 is a handle member 273 by means of which the pawls 270 and 271 may be moved into or out of engagement with their respective ratchets only one of said pawls being in engagement at any time. The side wall 30 of the casing 28 is suitably provided with an aperture 274 (Fig. 22) for the passage of the handle 273, said aperture being of sufficient width to permit the rocking movement of the handle and being preferably provided with a slight projecting portion 275 over which said handle is adapted to be sprung in its movement from one extreme position to the other where it is adapted to remain until again manually sprung into the opposite extreme position.

In this form of the invention as with the previous embodiment, it may be desirable to have the ends of the ribbon 255 formed of different color from the main body portion thereof in order to warn the subscriber when reversal of the ribbon will be necessary. In that event, the subscriber merely shifts the handle 273 from the extreme position in which it has been operating to the opposite extreme after which the spool 256 will be rotated in the opposite direction. When the pawl 270 is in engagement with the ratchet 268, the ribbon feed will take place during the manual stroke of the turn-table and when the pawl 271 is in engagement with the ratchet 269, said ribbon feed will take place on the automatic return stroke of the turn-table. It is of course to be understood that the two pawls 270 and 271 must necessarily be deflected in order to lie in different planes corresponding to those of their respective ratchets, said deflection being clearly shown in Fig. 23.

In Fig. 25 is illustrated a preferred form of paper strip which is provided with markings whereby to facilitate counting the number of records printed thereon. The strip 121 preferably has its extremities beveled as at 302 for the purpose of conveniently engaging in the spool or bobbin 147, as has previously been explained, and may be of any desirable length. At suitable intervals in its length, the paper strip may be provided with markings or graduations 303, 304 and 305 respectively. The spacing of these graduations is such that, due to the co-ordination of the line-spacing mechanism, a predetermined and preferably even number of records may be made between them. For example, the lines 303, which may be of a red color, are so spaced as to accommodate one hundred lines of printing between them, and half-way between each pair of lines 303 is a line 304, of another distinctive color such as yellow which designates fifty lines of printing. The spaces between the lines 303 and 304 are further divided by blue lines 305 so spaced as to include between them ten lines of printing. It will be clear from the foregoing that the number of records on the strip 121 can be easily and quickly counted by means of the uniform grouping between the various graduations.

In order to give warning that the end of the roll will soon be reached, and that therefore it needs replacement with a new roll, black lines 306 may be applied to the surface of the paper near its side edges and at the extremity of the strip. The lines 306 become visible through the vision slot in the top of the casing, giving the subscriber due notice of the approaching need for replacement.

It will be evident from the foregoing description that a simple and efficient mechanism has been provided for recording service used by a telephone subscriber, the record being complete and accessible to the subscriber for the purpose of comparison with bills rendered by the telephone company. It is of course to be understood that the specific forms of the invention herein described and illustrated in the drawings are merely illustrative and that changes may be resorted to in the details of construction, combinations and arrangements of parts within the scope of the appended claims without departing from the spirit of the invention. Nor is the invention restricted to use in the specific type of desk telephone illustrated, since it may be equally well adapted to other forms of telephone instruments.

Having thus described my invention, what I claim is:

1. In a recording mechanism for automatic telephones having a rotatable actuating member, the combination of a casing and a turn table, means for coupling the table with the rotatable actuating member, in a position above it, and means arranged in the casing, comprising a type ring rotatable with said actuating member, means for positioning a piece of paper adjacent to the type ring, an ink ribbon disposed between the paper and the type ring, and means for printing a record on the paper as the actuating member is rotated.

2. In a recording mechanism for automatic telephones having a rotatable actuating member, a type ring rotatable with said actuating member, a stationary support, a paper carriage slidable on said support and presenting a roll of paper to a printing position adjacent the type ring, means for effecting printing on the paper by the type ring after the completion of each forward rotation of said actuating member, and means for moving the carriage laterally with respect to the printing position after each printing operation.

3. In a recording mechanism for automatic

telephones having a rotatable actuating member, a type ring rotatable with said actuating member, a stationary support, a paper carriage slidable on said support and carrying a roll of paper, means for presenting a web of paper from said roll to a printing position adjacent the type ring, means for effecting printing on the paper by the type ring after the completion of each forward movement of said actuating member and means for moving the carriage laterally with respect to the printing position after each printing operation.

4. In a recording mechanism for automatic telephones having a rotatable actuating member, a type ring rotatable with said actuating member, a stationary support, a paper carriage slidable on said support and carrying a roll of paper, means for presenting a web of paper from said roll to a printing position adjacent the type ring, means for effecting printing on the paper by the type ring after the completion of each forward movement of said actuating member, means for progressively feeding the carriage laterally with respect to the printing position after each printing operation, and means for returning the carriage to its initial position.

5. In a recording mechanism for automatic telephones having a rotatable actuating member, a type ring rotatable with said actuating member, a stationary support, a paper carriage slidable in said support and carrying a roll of paper, means for presenting a web of paper from said roll to a printing position adjacent the type ring, means for effecting printing on the paper by the type ring after the completion of each forward movement of said actuating member, means for progressively feeding the carriage laterally with respect to the printing position after each printing operation, and means for automatically returning the carriage to its initial position after it has been fed a predetermined number of steps.

6. In combination with an automatic telephone having a manual actuating member, the combination of a casing and a turn table, means for coupling the table with the rotatable actuating member, in a position above it, and means arranged in the casing, comprising a recording mechanism including a set of type mounted for movement with said actuating member, a base plate mounted in fixed position adjacent to said actuating member, and mechanism mounted on the plate for cooperation with the set of type for recording the movements of said actuating member, said mechanism including a paper-supporting carriage with means for supporting a web of paper in printing position adjacent the set of type, an ink ribbon disposed between the paper and the set of type, and a printing hammer pivoted with respect to the stationary plate, said printing hammer being adapted to strike the paper and force it with the ink ribbon against the type as the actuating member operates.

7. A service-recording device for automatic telephones including an impulse dial for initiating connection with a station called, a stationary platform mounted above said dial, a turn-table rotatable above said platform and having means for connection to said dial, said turn-table having its axis of rotation coinciding with the axis of the dial and being divided to define operating strokes of different lengths, a print ring carried by the turn-table above the platform, said print ring having a plurality of type elements for designating the operating strokes of the turn-table, and means for printing a record with said print ring as the turn-table is actuated.

8. In a recording mechanism for automatic telephones having a rotatable actuating member, a type ring rotatable with said actuating member, a stationary support, a paper carriage slidable on said support and presenting a roll of paper to a printing position adjacent the type ring, means for effecting printing on the paper by the type ring after each manual rotation of said actuating member, and means for moving the carriage laterally with respect to the printing position after each printing operation, said rotatable actuating member being in the form of a casing for enclosing the other mechanism.

9. A service-recording device for automatic telephones including an impulse dial for initiating connection with a station called, a stationary platform mounted above said dial, a turn-table rotatable above said platform and having means for connection to said dial, said turn-table being divided to define operating strokes of different lengths, a print-ring carried by the turn-table above the platform, said print-ring having a plurality of type elements for designating the operating strokes of the turn-table, and a spring mounted with the turn-table for returning the same to its original position after each manual operation.

10. In a service-recording device for automatic telephones including an impulse dial for initiating connection with a station called, a supporting post concentrically mounted with respect to the impulse dial, a bracket for mounting said supporting post in fixed position, a platform carried by the supporting post, said platform being also held in fixed position with respect to the impulse dial, a turn-table rotatable above said platform and having means for connection to said impulse dial, a print-ring surrounding a portion of the supporting post and rotatable with the turn-table, a paper carriage slidably mounted and guided upon the platform, a roll of paper detachably held in the carriage, means for presenting a web of paper from the roll to a printing position adjacent to the print-ring,

an ink-ribbon disposed between the web of paper and the print-ring, a printing hammer adapted to cause impressions of the print-ring to be made upon the paper, means for moving the hammer to cause such impression once for each actuation of the impulse dial, gearing means for letter-spacing the carriage and the paper once for each printing stroke of the hammer, and means for automatically returning the carriage to its original position after a predetermined number of impressions have been made upon the paper.

11. In a recording mechanism for automatic telephones having a manually controlled actuating member, the combination of a casing and a turn table, means for coupling the table with the rotatable actuating member, in a position above it, and means arranged in the casing, comprising a type ring rotatable through the medium of said actuating member, means for positioning a piece of paper adjacent to the type ring, and means for printing on the paper with the type ring as the actuating member operates.

12. In a recording mechanism for automatic telephones having a manual actuating member, the combination of a casing and a turn table, means for coupling the table with the rotatable actuating member, in a position above it, and means arranged in the casing, comprising a set of type mounted for movement with said actuating member, a base plate mounted in fixed position adjacent to said actuating member, and mechanism mounted on the plate for cooperation with the set of type to record movements of the actuating member, said mechanism including means for presenting a web of paper from a roll to a printing position adjacent the set of type, inking means, and a printing hammer pivoted with reference to the stationary plate, said printing hammer being adapted to strike the paper and force it against the type as the actuating member operates.

13. In a recording mechanism for automatic telephones having a manual actuating member, the combination of a casing and a turn table, means for coupling the table with the rotatable actuating member, in a position above it, and means arranged in the casing, comprising a set of type mounted for movement with said actuating member, a base mounted in fixed position adjacent to said actuating member, and mechanism mounted on the base for cooperation with the set of type to record movements of the actuating member, said mechanism including means for presenting a web of paper from a stock supply to a printing position adjacent to the set of type for the printing of successive digits of a single record as a group.

14. In a recording mechanism for automatic telephones having a rotatable actuating member, the combination of a casing and a turn table, means for coupling the table with the rotatable actuating member, in a position above it, and means arranged in the casing, comprising a set of type rotatable with said actuating member, a stationary support, a paper carriage slidable on said support and presenting a web of paper from a stock roll to a printing position adjacent the set of type, gearing means for the letter or digit spacing of the carriage after each printing operation, and means for effecting printing of successive digits of a single record as a group on the paper by the set of type during each cycle of operation of the actuating member.

15. In a recording mechanism for automatic telephones having a rotatable actuating member, the combination of a casing and a turn table, means for coupling the table with the rotatable actuating member, in a position above it, and means arranged in the casing, comprising a set of type movable with said actuating member, means for positioning a piece of paper in printing position adjacent the set of type, ink means, a hammer mounted for movement toward and away from the printing position, and means including a spring for operating said hammer with a quick impact against the paper and set of type at a predetermined point in the rotation of the actuating member.

16. In a recording mechanism for automatic telephones having a rotatable actuating member, the combination of a casing and a turn table, means for coupling the table with the rotatable actuating member, in a position above it, and means arranged in the casing, comprising a set of type movable with said actuating member, means for positioning a web of paper from a stock roll to a printing position adjacent the set of type, an ink ribbon adjacent the printing position, a hammer pivoted for movement of its free end toward and away from the printing position, and mechanism for operating the hammer to effect printing on the paper by the set of type and ink ribbon, said mechanism including a spring for storing energy during part of the movement of the actuating member, and means for releasing the hammer at a predetermined point in the cycle whereby the spring will produce a quick impact of the hammer against the paper and set of type.

17. In a recording mechanism for automatic telephones having a rotatable actuating member, a set of type rotatable with said member, a stationary support, a paper carriage slidable on said support and carrying a roll of paper, means for presenting a web of paper from said roll to a printing position adjacent the set of type, means for effecting printing on the paper by the set of type after the completion of each forward movement of said actuating member, means for progressively feeding the carriage laterally with respect to the printing position after each printing operation, and means for effecting

the return of the carriage at any intermediate position in its travel.

18. In a recording mechanism for automatic telephones having a manually actuating member, the combination of a casing and a turn-table, means for coupling the table with the rotatable actuating member in a position above it, and means arranged in the casing, comprising a set of type mounted for movement with said actuating member, a base mounted in fixed position adjacent to said actuating member, and mechanism on the base for cooperation with the set of type to record movement of the actuating member, said mechanism including means for presenting a web of paper from a stock supply to a printing position adjacent to the set of type for the printing of successive digits of a single record as a group, and means for storing the web of paper at a point past the printing position and set of type after printing upon the web of paper.

JAMES F. DEMPSEY.