June 26, 1945. C. N. GILLESPIE 2,378,999

COMPENSATION AMPLIFIER SYSTEM

Filed June 15, 1943 2 Sheets-Sheet 1

Fig. 1.

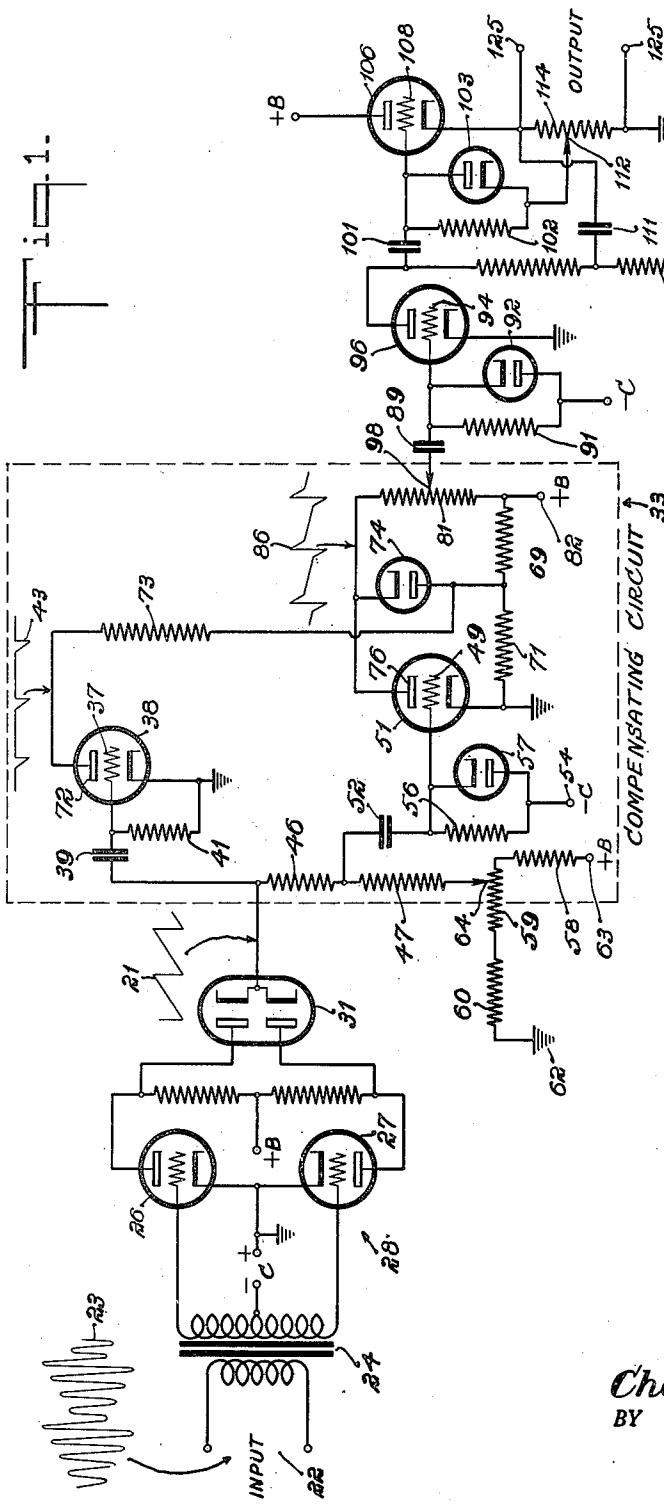

Fig. 2.

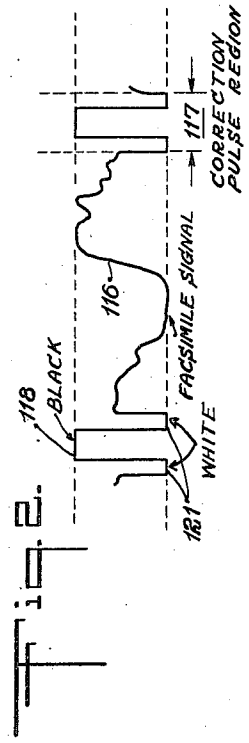

INVENTOR.
Charles N. Gillespie
BY
H. B. Brown.
ATTORNEY.

June 26, 1945. C. N. GILLESPIE 2,378,999

COMPENSATION AMPLIFIER SYSTEM

Filed June 15, 1943 2 Sheets-Sheet 2

Fig. 3.

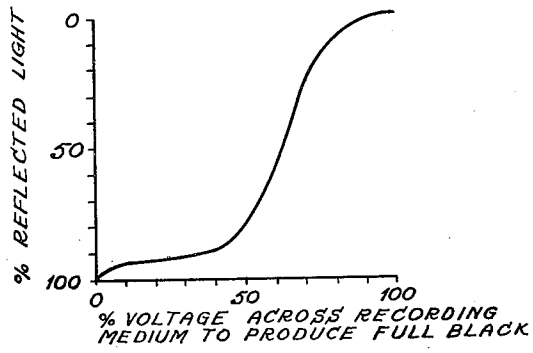

Fig. 4.

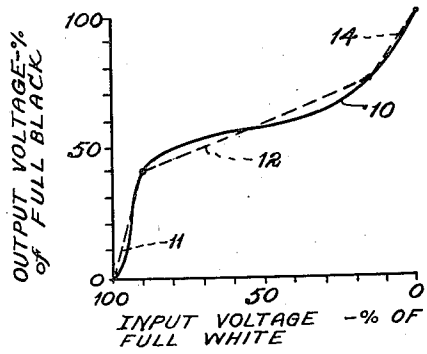

Fig. 5.

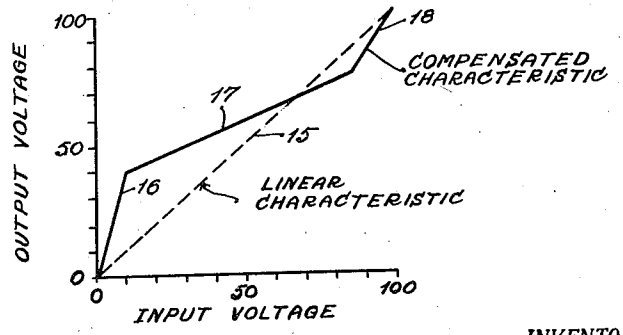

INVENTOR.
Charles N. Gillespie
BY
H. G. Grover,
ATTORNEY.

Patented June 26, 1945 2,378,999

UNITED STATES PATENT OFFICE

2,378,999

COMPENSATION AMPLIFIER SYSTEM

Charles N. Gillespie, Brooklyn, N. Y., assignor to Radio Corporation of America, a corporation of Delaware

Application June 15, 1943, Serial No. 490,865

8 Claims. (Cl. 179—171)

This invention relates to an amplifier system wherein it is possible to compensate for undesirable conditions in response devices or elements of response devices in order that a linear output or linear final response may be obtained. The system also affords a means whereby peculiarities in the general response characteristic of an electrical translating apparatus or the response characteristic of an element associated with a translating apparatus may be compensated to produce a desired overall response or end result.

More specifically, the present system is applicable to facsimile recording systems and may be used to amplify signals having a varying characteristic, such as a varying amplitude as produced by a facsimile scanner with means to compensate for any deficiencies in effectiveness of a recording apparatus or recording medium in order that the reproduced copy at the facsimile receiver may be a faithful reproduction of the original subject being transmitted.

In facsimile systems it is seldom possible to have all of the parts and elements of the system operate in such a manner as to maintain strict linear amplification and response characteristics. In the recording of true half-tones certain errors are generally present, which, if not compensated, would produce an undesirable recording and to compensate for such errors it is desirable to introduce a corrective or compensation device. The linearity of half-tone reproduction in the usual facsimile system is almost entirely dependent on the recording mechanism as it is relatively easy to make the associated electrical circuits linear. In a photographic recording method the linearity of the light sensitive medium such as a photographic film and the light varying means such as a galvanometer mirror mechanism determine the linearity of half-tone reproduction. Carbon impression and chemical recordings have peculiar characteristics of their own. Specially treated recording papers also have different half-tone characteristics. A practical method of and apparatus for overcoming these inherent difficulties is described in this disclosure.

This invention therefore relates to a compensation system in which the slope of the correcting curve may be changed at different preset points to compensate for the non-linear response of one or more parts of the entire transmitting and receiving system. This is accomplished in a novel manner by taking advantage of the fact that the gain obtainable from a tube can be varied with variations in the tube load resistance. Special circuits have been devised and are disclosed herein to vary the load resistance in a predetermined manner.

It is, therefore, an object of the present invention to provide a novel amplifier system wherein an apparatus or a part of such apparatus having inherently non-linear response may be so controlled as to produce a corrected response which is linear with respect to the originating variations.

A further object of the present invention resides in the provision of novel means whereby variations in the response of a recording medium in a facsimile receiver may be compensated to permit the true reproduction of tone variations, for example uniformly from black to white.

Additional objects and advantages of the present invention will become more apparent to those skilled in the art from a reading of the following specification and claims, particularly when considered with the drawings, wherein like figures represent like parts, and wherein:

Fig. 1 illustrates a demodulating and an amplifying system embodying the invention in a preferred form.

Fig. 2 shows, by way of example, an assumed facsimile signal.

Figs. 3 to 5 inclusive show various curves referred to in explaining the invention.

Referring for the present to Fig. 3 of the drawings, there is shown a characteristic curve of the color change or the change in light reflecting properties of an electrically sensitive recording medium upon application of recording voltage or current thereto. The recording medium selected by way of example for illustrating the invention is a chemically treated recording paper which changes color upon application of recording electrical voltage to it by a recorder such as a facsimile recorder. The curve of Fig. 3 is the characteristic of this paper and it is illustrative only. For the purpose of illustrating the compensation methods of the invention the length of the abscissa scale indicates the voltage to be produced across the paper to obtain the maximum color change. The length of the ordinate scale indicates the change, such as a color change, in the recording paper which makes the record visible, or the related light reflective condition of the recording paper in the recorded areas.

Fig. 4 of the drawings shows approximately the characteristic shape 10 of the recording electrode voltage which will produce a linear recording on

a recording paper having the characteristic of Fig. 3. By inspection, it will be seen from Fig. 4 that a close approximation of the desired curve can be obtained by straight lines of the proper slope. The dashed lines 11, 12, and 14 of Fig. 4 show an approximation which may readily be provided by the invention to be described. The illustrative example of Fig. 1 of the drawings is designed to provide the correction curve 11, 12, and 14. On Fig. 5 reference character 15 indicates a linear voltage characteristic such as may be obtained from a signal pickup device and an amplifier or amplifiers operating linearly. Lines 16, 17, and 18 show the desired change in this characteristic. From the curve 16, 17, and 18 of Fig. 5, it will be seen that the gain of an amplifier compensated in accordance with the invention as compared with a linear system giving the curve 15 must be of the general order of four times the gain of the linear system for the first 10 per cent of input voltage increase. For the next 75 per cent of increase, the gain must be approximately half that of the linear system. For the last 15 per cent of increase the gain must be one and one-half or two times that of the linear system. Then, if a linear sawtooth wave were applied to the compensated amplifier for the time of one scanning line in a facsimile recording system, for example, the density of the recording would vary linearly from beginning to end of the scanning stroke.

Fig. 1 of the drawings will be described and its operation explained by assuming that a carrier tone 23, amplitude modulated by a saw tooth wave 21 in any known manner, is applied to input terminals 22. The saw tooth wave 21 appears as the envelope of the tone 23.

This modulated tone signal is applied to the primary of a transformer 24 and the output from the secondary of this transformer is connected to the grids of tubes 26 and 27, constituting an amplifier of the usual type 28. The amplifier 28 feeds a rectifier-demodulator 31, the output of which is applied to the compensating circuit 33 included within the dashed line rectangle. If the carrier 23 is frequency or phase modulated by the signal 21, the signal 21 may be recovered by the usual discriminator circuit or other demodulation arrangement. The demodulated signal 21 is applied directly to the grid 37 of a tube 38 through a capacitor 39. The grid 37 is initially driven positive and the resulting current flow charges the capacitor 39. The grid resistor 41 and the capacitor 39 are made quite large so that the accumulated charge does not leak off appreciably between successive cycles of the signals 21 and the accumulated charge in capacitor 39 biases grid 37 far beyond cut-off. Accordingly, only the peaks of the input wave 21 are amplified by the discharge tube 38, as indicated by the wave form 43 which appears on the plate 72 of the tube 38. These peaks, by driving the grid 37 slightly positive, sustain the charge on the capacitor 39 normally to keep the tube 38 at a cut-off.

A voltage divider composed of resistors 46 and 47 in the positive side of the circuit of the rectifier 31 is employed to apply a low level signal input to the grid 49 of a tube 51. This is accomplished by connecting the point between the resistors 46 and 47 to the grid 49 through a capacitor 52. The grid 49 is also connected to the source of "C" bias voltage 54 (derived in any known manner and not shown) through a grid resistor 56. A diode 57 connected between the grid 49 and the "C" bias source (not shown) connected to terminal 54 prevents the grid 49 from ever being driven more negative than the grid bias supply voltage. Thus, if the signal 21 applied by way of the capacitor 52 tends to drive the grid 49 negative by an amount greater than the bias voltage of the "C" bias source connected at 54, the diode 57 will become conducting and the capacitor 52 is charged to some positive value which will establish a predetermined desired average bias for the tube 51. A voltage divider comprising resistors 58, 59, and 60 is connected between the reference point of the system such as ground at 62 and the terminal 63 of the usual source of positive potential (not shown) for supplying plate voltages. A movable contact 64 provides means for applying a variable threshold bias for the demodulator 31.

A pair of resistors 69 and 71 is connected between the positive terminal of the plate supply source connected at 82 and ground in order to operate as a voltage divider for supplying plate voltage to the plate 72 of the tube 38 by way of a load resistor 73. A diode 74 is connected between the plate 76 of the tube 51 and the more positive terminal of the load resistor 73. A plate load resistor 81 is connected in the circuit between the plate 76 of the tube 51 and the terminal 82 of the plate supply source. In accordance with the usual practice, a single plate voltage supply source with the usual filters and voltage dividers may be employed for supplying plate voltage to all tubes in contrast to separate elements shown for illustration.

The lowest or most negative part of the input voltage signal appearing on grid 49 of the tube 51 is fixed by the diode 57 so that any increase from this value in the positive direction will be amplified by the tube 51 in the conventional manner. If, however, the voltage appearing on the grid 49 is more positive than a predetermined value, the plate voltage of the tube 51, and consequently the cathode voltage of the diode 74, will become negative with respect to the bias voltage on the plate of the diode 74 as provided by the voltage divider 69 and 71, so that this diode will begin to conduct and effectively reduce the load resistance of the tube 51 and thereby reduce its gain.

The signal can then increase still further until the tube 38 begins to conduct. The plate current of the tube 38 effectively makes the plate of the diode 74 more negative and thereby increases the load resistance of the tube 51, consequently increasing its gain. It is evident from this explanation of the operation of the compensating circuit 33 so far described, that with proper choice of circuit values, the characteristic voltage input vs. voltage output curve of the compensator 33 can be made to substantially correspond to curves 16, 17, and 18 shown in Fig. 5 of the drawings, which corresponds to the wave 86 which is indicated as appearing in the output circuit of the tube 51 across the load resistor 81 with the input wave 21 applied to the compensating circuit 33.

Capacitor 89, resistor 91, and diode 92 in the circuit of the grid 94 of a tube 96 are for the purpose of coupling the voltage from the output of a compensating circuit and establishing a fixed reference level on the grid 94. The amount of voltage applied to the capacitor 89 is variable by an adjustable connection 98 to the load resistor 81 of the tube 51.

Capacitor 101, resistor 102, and diode 103 in the grid circuit of a tube 106 are also for the purpose of coupling voltage from the output of

the tube 96 and establishing a fixed reference level on the grid 108 of the tube 106. A resistor 109 and a capacitor 111 prevent undue degeneration in the output tube 106. The initial or reference bias of the tube 106 can be adjusted by the adjustable connection 112 to the cathode output resistor 114 of the tube 106. Where high output power capacity is desired, several identical tubes connected in parallel may replace the single tube 106.

The operation of the system will now be explained for the recording of a facsimile signal 116, the shape of which is assumed to be, for illustrative purposes, shown in Fig. 2. This signal is of the general character obtained by modulating the transmitted or reflected beam of light by subject copy in a facsimile transmitter scanner. The signal can, if necessary, be inverted at the transmitter where a mark is to be obtained at the recorder by a black level signal. At a receiving station the signal 116 is usually recovered by demodulating a transmitted carrier. Peaks corresponding to full black and full white are shown as occurring at regular intervals. These regularly recurring peaks or irregularly recurring pulses picked up in scanning the subject copy are utilized in the operation of the compensator and following amplifiers. The peaks as shown by way of example are usually obtained by a mark on a movable part of the scanner or by a black portion in the underlap region of the scanner drum. The peaks are usually employed for control purposes as indicated at 117 on the drawings marked "correction pulse region." If the signal shown by Fig. 2 is applied to the grid 37 of the tube 38, the "black" pulses 118 establish the high negative bias required for operation of this tube and only the black peaks of the signal are amplified by this tube. The actual amount of black peak amplified by the tube 38 will depend on the input level; therefore, it is important that the peak-to-peak input voltage be held at the value required by the design of the compensator. This same voltage, reduced in amplitude, is applied to the grid 49 of the tube 51. The negative white pulses 121 (Fig. 2) cause the diode 57 to conduct and establish a bias about which the signal operates. In operation of this part of the circuit, the actual voltage on grid 49 and consequently on the plate 76 of the tube 51 for "white" is fixed. This fixed white level must be retained in all following stages. The output voltage which is derived across cathode load resistor 114 and appears at terminals 125 is the voltage that is applied to the recording medium such as a recording paper or to the input circuit of a percussion or pressure recorder, and should be fixed for white recording as well as for black and for all intermediate density steps. This means that in all stages of amplification the voltage from the black peak 110 or the white peak 121 must vary from a fixed value and not about a fixed value, as would be the case if the diodes 57, 92, and 103 were removed.

The output of the compensator circuit 33 is applied to the tube 96, through the capacitor 89, the resistor 91, and the diode 92 for establishing the black level at this point. The diode 103 establishes the black level on the output grid.

The volume or gain control 98 varies the signal level which in effect changes the background or white level of the output, the black level remaining fixed at this point because of the diode 103. The control 112 varies the fixed bias on the tube 106 which controls the "blackness" of recording.

Having now described the invention, what is claimed and desired to be secured by Letters Patent is the following:

1. Apparatus for producing a linear recording on a recording medium having a non-linear response characteristic comprising an amplifier, means comprising a vacuum tube to alter the gain of said amplifier, and means operating under control of input signals to said amplifier to control said amplifier gain altering means, said first named means effectively altering the load resistance of said amplifier by said vacuum tube becoming conductive.

2. Apparatus for producing a linear recording on a recording medium having a non-linear response characteristic comprising an amplifier having a cathode, a control electrode, and an output electrode, means to alter the gain of said amplifier comprising a discharge tube connected in circuit between said cathode and said output electrode, and means operating under control of input signals to said amplifier to control said amplifier gain altering means, said first named means effectively altering the load resistance of said amplifier.

3. A compensated amplifier comprising thermionic discharge means having a control electrode, means including a demodulator for maintaining a cut-off bias on said thermionic discharge means, a second thermionic discharge means having a control electrode, means to apply signals from said demodulator to said control electrode of said second thermionic discharge means, and space discharge means under control of said first thermionic discharge means for varying the load resistance of said second thermionic means whereby to vary the gain of said second thermionic discharge means.

4. A compensated amplifier comprising thermionic discharge means having a control electrode, means including a demodulator for maintaining a cut-off bias on said thermionic discharge means, a second thermionic discharge means having a control electrode, means to apply signals from said demodulator to said control electrode of said second thermionic discharge means, a diode for varying the load resistance of said second thermionic means, and means to apply a bias to said diode from said first thermionic discharge means whereby to vary the gain of said second thermionic discharge means.

5. An amplifying system comprising an electron discharge device having a cathode and a pair of anodes, means for applying a threshold bias to said electron discharge device, means for applying a signal source of variable potential between said anodes and said cathode, a pair of thermionic discharge means associated with the output circuit of said electron discharge device each of the thermionic discharge means having different operating biases, means whereby said thermionic discharge means will respond to the presence of and amount of current in said output circuit of said electron discharge device, and means for combining the outputs from said thermionic discharge means.

6. An amplifying system comprising an electron discharge device having a cathode and a pair of anodes, means for applying a threshold bias to said electron discharge device, means for applying a signal source of variable potential between said anodes and said cathode, a pair of

thermionic discharge means associated with the output circuit of said electron discharge device, one of said thermionic discharge means being biased to serve as a peak amplifier, the other of said thermionic discharge means being biased to serve as a normal amplifier, means associated with said other discharge means to alter its gain under control of said thermionic discharge means serving as a peak amplifier, and means whereby said pair of thermionic discharge means will respond to the presence of and amount of current in said output circuit of said electron discharge device.

7. An amplifying system comprising an electron discharge device serving as a demodulator, means for applying a signal source of variable potential to said electron discharge device, a thermionic discharge means having an input circuit and an output circuit, biasing means in the input circuit of thermionic discharge means to cause said thermionic discharge means to operate as a peak amplifier, a second thermionic discharge means having an input circuit and an output circuit, a diode associated with said output circuit of said second thermionic discharge means to vary the load resistance thereof under control of said first named thermionic discharge means, and means whereby said first and second named thermionic discharge means will respond to the presence of and amount of current in said output circuit of said electron discharge device.

8. A compensated amplifier for a facsimile recorder comprising a signal responsive demodulator, a discharge tube having a control electrode, biasing means comprising a resistance and a capacitance connecting said control electrode to said demodulator for biasing said discharge tube to serve as a peak amplifier, a second discharge tube having a control electrode, biasing means comprising a capacitance and a diode connecting said control electrode of said second discharge tube to said demodulator, and means for varying the load resistance of said second discharge tube under control of said first named discharge tube.

CHARLES N. GILLESPIE.