May 22, 1923. 1,456,454

W. LINDENMAYER

TOILET CASE

Filed Dec. 13, 1922

Fig. 1.

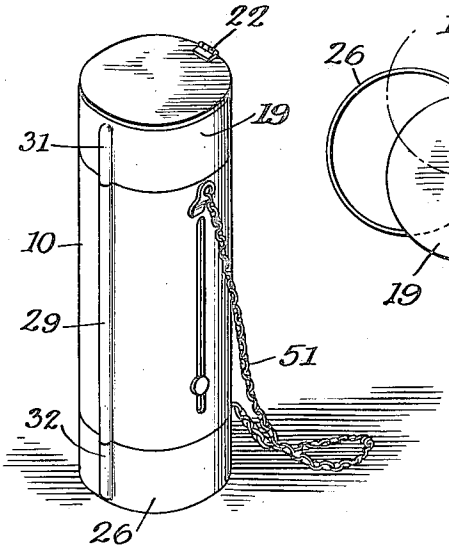

Fig. 2.

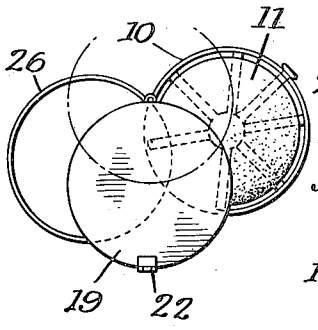

Fig. 3.

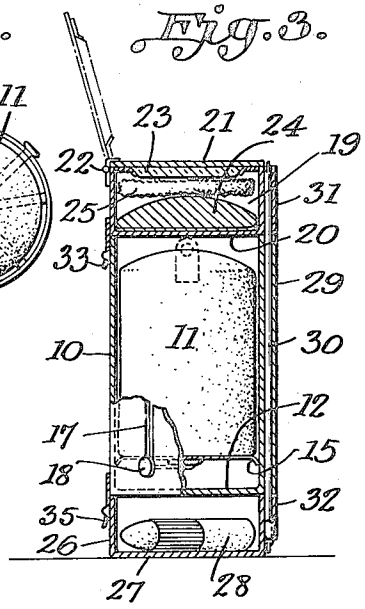

Fig. 5.

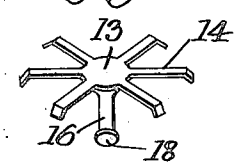

Fig. 6.

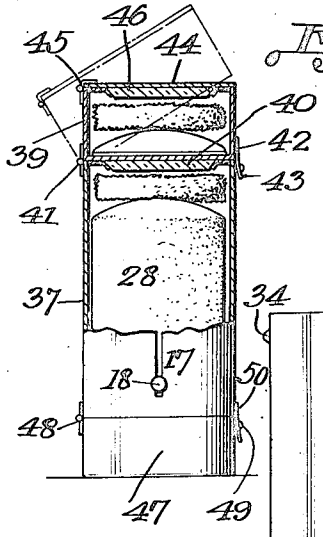

Fig. 4.

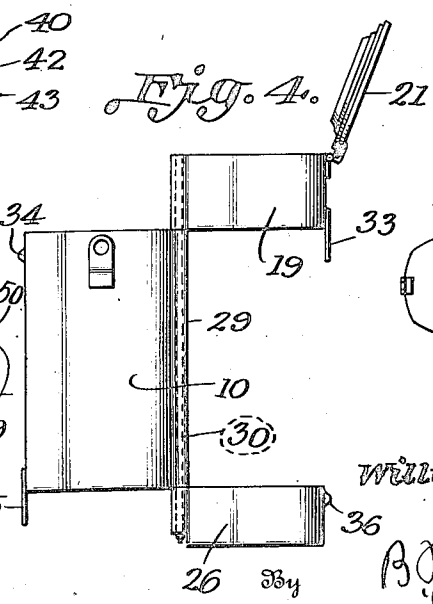

Fig. 7.

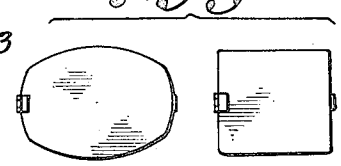

Inventor
William Lindenmayer

By B. P. Fulbrune

Attorney

Patented May 22, 1923. 1,456,454

UNITED STATES PATENT OFFICE.

WILLIAM LINDENMAYER, OF NEW YORK, N. Y.

TOILET CASE.

Application filed December 13, 1922. Serial No. 606,614.

To all whom it may concern:

Be it known that I, WILLIAM LINDENMAYER, a citizen of the United States, residing at New York, in the county of New York and State of New York, have invented certain new and useful Improvements in Toilet Cases, of which the following is a specification.

My invention relates to toilet cases, of the type ordinarily known as "vanity cases."

An important object of the invention is to provide a toilet case of the above mentioned character, so constructed that a relatively large powder compact may be used, and fed forwardly as it is used, with a rouge compact of suitable size, and a mirror, all combined in a single device.

A further object of the invention is to provide a toilet case of the above mentioned character, having means for holding a lip stick, so that access may be readily had thereto.

A further object of the invention is to provide means whereby the powder compact, rouge compact, and mirror, may be thrown into a peculiar relation, in use, whereby the mirror may be employed in applying either the powder or rouge, in a highly convenient manner.

A further object of the invention is to provide a device of the above mentioned character, which is a simple construction, neat and attractive in appearance, strong and durable.

Other objects and advantages of the invention will be apparent during the course of the following description.

In the accompanying drawings forming a part of this specification, and in which like numerals are employed to designate like parts throughout the same,

Figure 1 is a perspective view of a toilet case embodying my invention,

Figure 2 is a plan view of the same, parts being shifted to the open position,

Figure 3 is a side elevation of the case, parts in central longitudinal section,

Figure 4 is a side elevation of the device, with the parts in the open position, showing the body portion, rouge receptacle, and mirror in stepped relation,

Figure 5 is a perspective view of the feed spider,

Figure 6 is a side elevation, parts in section, of a modified form of toilet case, and,

Figure 7 is a plan view of two toilet cases, showing different shapes.

In the drawings, wherein for the purpose of illustration are shown preferred embodiments of my invention, attention being called to Figures 1 to 5 inclusive, the numeral 10 designates the body portion of the toilet case, serving as a chamber or compartment for receiving and holding a powder compact 11. This body portion is shown as cylindrical, for the purpose of illustration, but may be made in any desired shape. The tubular body portion 10 is provided with a closed bottom 12, as clearly shown in Figure 3 while its top is open. The powder compact 11 rests upon a feed spider 13, having resilient arms 14, the ends of which are preferably bent downwardly into angular portions 15, which frictionally engage the inner wall of the tubular body portion 10. The feed spider 13 is provided with a radial arm 16, preferably rigid, projecting through a longitudinal slot 17, and carrying a button 18. By forcing the button 18 upwardly, the powder compact 17 will be elevated. The angular portions 15 are adapted to more readily slide upwardly upon the inner wall of the tubular body portion 10 than downwardly, and hence the powder compact may be advanced upwardly, but will not move downwardly, unless subjected to excessive pressure. The usual powder puff may be carried within the tubular body portion 10, upon the upper end of the powder compact.

The numeral 19 designates a rouge compartment or receptacle, which is shown as cylindrical, and corresponding in shape and diameter to the tubular body portion 10. The receptacle 19 has a closed bottom 20, while its top is open, and is adapted to be covered by a lid 21 hinged thereto as shown at 22. This lid may be held closed by any suitable form of latch (not shown) if it should be desired to use the same. The lid 21 carries upon its inner face a mirror 23, secured thereto by any suitable means. The numeral 24 designates a rouge compact, removably held within the compartment 19, with a rouge puff 25 upon its top, as shown.

The numeral 26 designates a lip stick compartment or receptacle, with its bottom 27

closed and its top open. 28 is a lip stick. The compartment or receptacle 26 is shown as cylindrical, thereby corresponding in shape and diameter to the tubular body portion 10.

Extending longitudinally of the tubular body portion 10, and exteriorly thereof, is a tube 29, rigidly formed or mounted thereon, by any suitable means. This tube extends for the entire length of the body portion and serves to reinforce and stiffen the same. The tube 29 receives a longitudinal pivot pin 30, which projects downwardly beyond the opposite ends of the tube and has its ends pivotally mounted within tubes 31 and 32 which are carried by or formed upon the compartments or receptacles 19 and 26, respectively. It is thus seen that the compartments or receptacles 19 and 26 are adapted to turn upon the pin 30, in planes, at a right angle to the central longitudinal axis of the tubular body portion 10. The tubes 31 and 32 are free to turn upon the pin 30, but cannot partake of perceptible longitudinal movement thereon. The compartment or receptacle 19 carries a resilient latch 33, apertured for receiving a stud 34, formed upon the tubular body portion 10. This latch and stud serves to lock the compartment or receptacle 19 in the closed position. The tubular body portion 10 is provided near its lower end with an apertured latch 35, for receiving a stud 36, formed upon the compartment or receptacle 26, and adapted to lock it in the closed position.

As shown in Figure 4, the compartments or receptacles 19 and 26 are in the open position, with the lid 21 open. The tubular body portion 10, the compartment 19, and lid 21 are thus arranged in a stepped relation, and the user may conveniently use the mirror in applying either the powder or rouge.

In Figure 6 I have shown a modification of the device. In this figure a tubular body portion 37 is provided for the powder compact 28, which is supported by a feed spider 13, and advanced upwardly in the manner as described in connection with the first form of the invention. The bottom of the tubular body portion 37 is closed and the top open, as described in connection with the tubular body portion 10.

The numeral 39 designates a rouge compartment or receptacle, having its bottom closed and its top open. This receptacle is provided upon its bottom with a mirror 40. The receptacle 39 serves to close the upper end of the tubular body portion 37 and is hinged thereto at 41 to swing vertically with relation to the same. The receptacle is equipped with a resilient apertured catch 42, for receiving a stud 43, secured to the tubular body portion 37. Secured to the top of the receptacle 39 is a lid 44, by means of a hinge 45, and this lid is provided upon its inner surface with a mirror 46, as shown.

The numeral 47 designates a lip stick compartment or receptacle, hinged to the closed end of the tubular body portion 37, as shown at 48, and having a lug 49 to coact with an apertured spring catch 50, rigidly secured to the tubular body portion 37.

In the use of this form of the device, the rouge may be used by swinging the lid 44 to the open position whereby the mirror 46 may be viewed. To use the powder, the lid 44 may remain closed, while the rouge compartment or receptacle 39 is shifted to the open position whereby the mirror 40 will be visible, and access may be had to the powder compact.

While I have shown the two forms of the device as cylindrical, the invention is in no sense restricted to this particular shape, as they may be formed in various other shapes. In Figure 7 I have illustrated, in plan view, the devices formed elliptical and square in cross section. The invention is not restricted to the employment of any particular shape.

It is desired that the case be suspended by a chain or flexible element, and in Figure 1 the numeral 51 designates a chain, the opposite ends of which are suitably attached to the tubular body portion 10. Of course this chain may be dispensed with, if desired.

It is to be understood that the forms of my invention herewith shown and described are to be taken as preferred examples of the same, and that various changes in the shape, size, and arrangement of parts may be resorted to without departing from the spirit of my invention or the scope of the subjoined claims.

Having thus described my invention, I claim:

1. A toilet case comprising a relatively long tubular body portion adapted for receiving a relatively long powder compact and having its forward end open, a feeding element mounted at the rear end of the powder compact within the tubular body portion to advance the same forwardly and having angularly arranged resilient extensions which are inclined rearwardly and have frictional engagement with the inner wall of said tubular body portion, said angularly arranged extensions permitting of the forward movement of the feeding device while opposing its rearward movement with respect to the tubular body portion, means extending exteriorly of the tubular body portion, to move the feed device forwardly within the tubular body portion, a rouge compact receiving receptacle pivotally connected with the forward open end of the tubular body portion and having its bottom adapted to cover the same, and a lid pivotally connected with the open end of the

rouge receptacle to cover the same and provided upon its inner side with a mirror.

2. A toilet case comprising a relatively long tubular body portion for receiving a relatively long powder compact, said tubular body portion being provided with a longitudinal slot, a feeding spider mounted within the tubular body portion and having radial resilient arms provided at their ends with rearwardly extending angularly disposed ends, said angularly disposed ends having frictional engagement with the walls of the tubular body portion to permit of the free forward movement of the feed spider and to retard its rearward movement within the tubular body portion, a radial arm secured to the feed spider and extending through the longitudinal slot and provided with an exterior element by means of which the feed spider may be manually shifted longitudinally forwardly within the tubular body portion, a rouge receptacle pivotally mounted upon the forward open end of the tubular body portion and adapted to cover the same, a lid pivotally connected with the rouge receptacle and provided upon its inner side with a mirror.

In testimony whereof I affix my signature.

WILLIAM LINDENMAYER.