United States Patent [19]

Stipek, Jr.

[11] **3,914,483**

[45] **Oct. 21, 1975**

[54] **DOUBLE DIE-CUT LABEL**

[75] Inventor: **Charles J. Stipek, Jr.**, Riverside, Ill.

[73] Assignee: **Bates Printing Specialties, Inc.**, Cicero, Ill.

[22] Filed: **Feb. 8, 1974**

[21] Appl. No.: **440,825**

[52] **U.S. Cl.** ..... **428/42**; 40/2 R; 283/18; 283/21

[51] **Int. Cl.**[2] **G09F 3/10**

[58] **Field of Search** ..... 161/38, 36; 40/2, 125 A; 283/21, 18

[56] **References Cited**

UNITED STATES PATENTS

814,592	3/1906	Duane	283/18
2,936,540	5/1960	Power	40/125 A
3,638,340	2/1972	Gottschalk	283/21
3,750,317	8/1973	Morgan	283/21
3,799,829	3/1974	Heatwole	161/406

Primary Examiner—William E. Schulz

Attorney, Agent, or Firm—Kinzer, Plyer, Dorn & McEachran

[57] **ABSTRACT**

A multiple part label including a main portion which may be adhered to a package or container and inner removable label portions which are also separately adherable to a label or container. The inner removable portions may be in the nature of coupons or may have decorations or information imprinted thereon.

6 Claims, 6 Drawing Figures

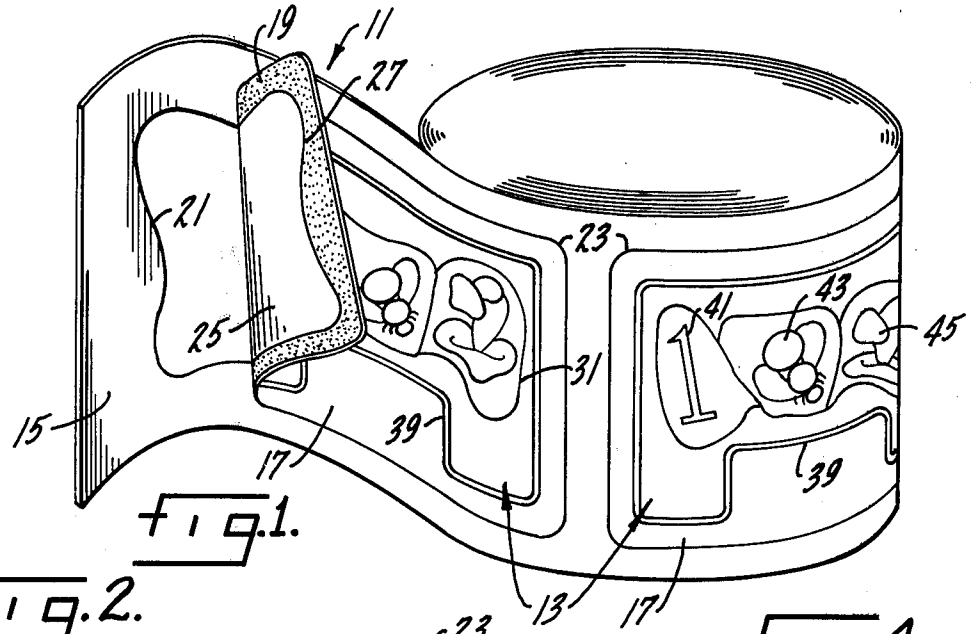

Fig. 1.

Fig. 2.

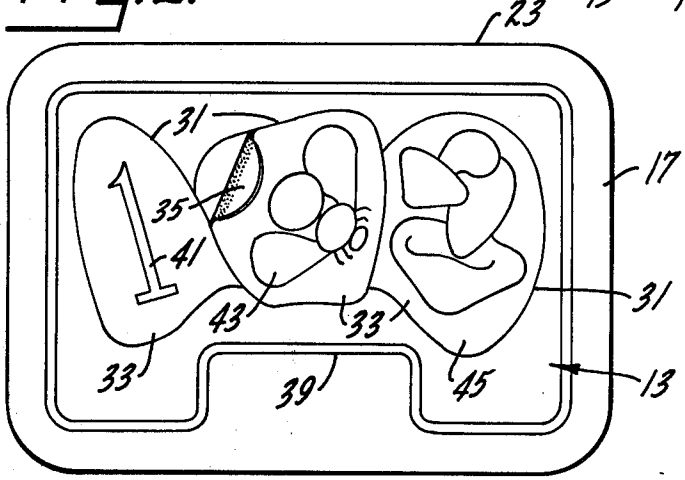

Fig. 4.

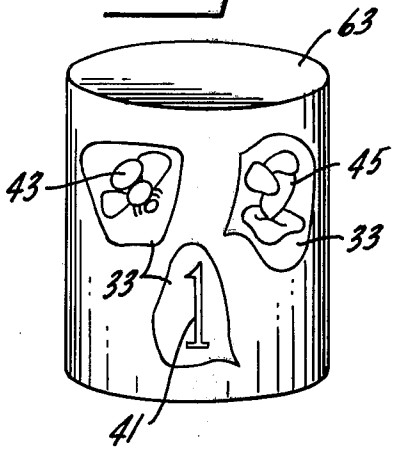

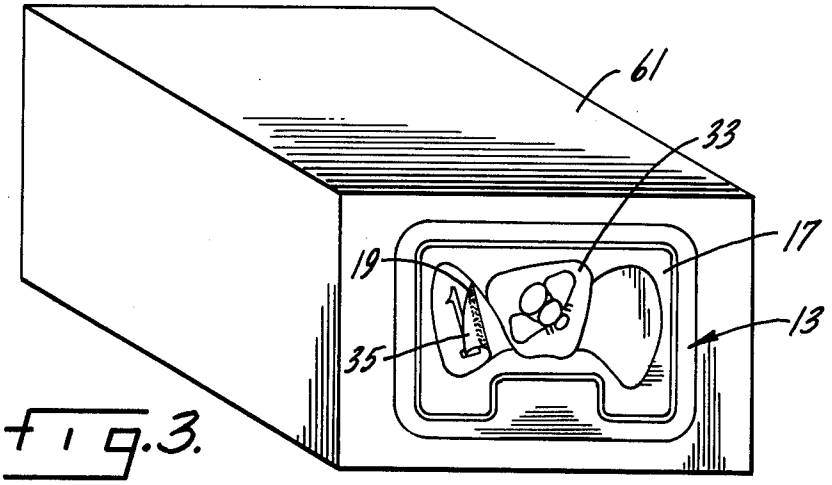

Fig. 3.

Fig. 5.

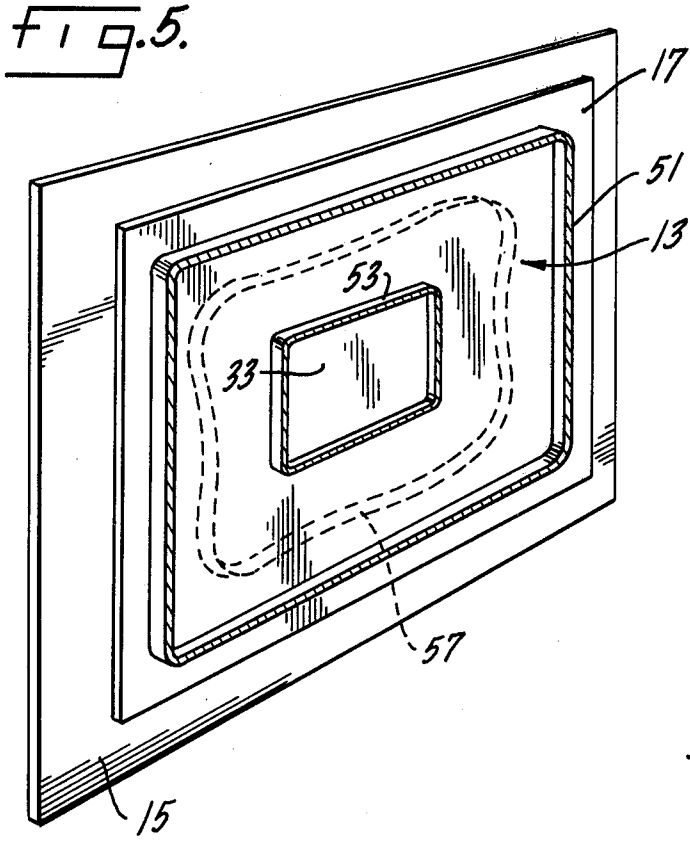

Fig. 6.

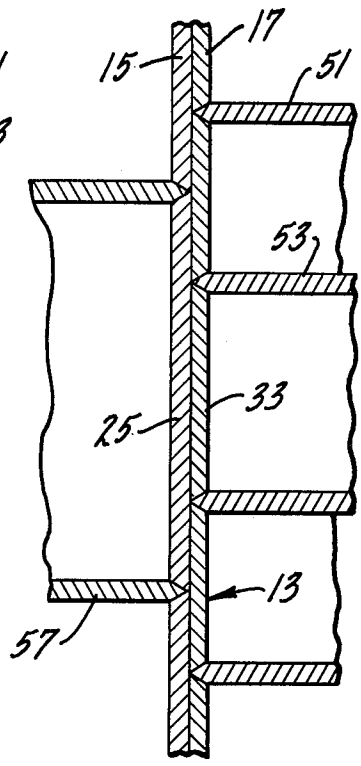

DOUBLE DIE-CUT LABEL

SUMMARY OF THE INVENTION

This invention is concerned with a multi-part label which may be adhered to packages or containers. The label has inner portions which can be removed from the main label even after it is adhered to a package or container and separately adhered to other packages or containers. The inner removable labels may be imprinted with indicia designating them as coupons or may be imprinted with material of a decorative or informative nature.

An object of this invention is a label having a number of inner labels which can be easily removed from the main label after it is affixed to a package or container with the inner labels also being easily attachable to packages or containers.

Another object is a label of the type described which may be easily manufactured.

Another object is a label of the type described having inner or dependent labels which may easily be removed from the main label.

Other objects may be found in the following specification, drawings and claims.

BRIEF DESCRIPTION OF THE DRAWINGS

The invention is illustrated more or less diagrammatically in the following drawings wherein:

FIG. **1** is a perspective view of a roll or labels of this invention showing a main label partially removed from its backing sheet;

FIG. **2** is a top plan view of a main label;

FIG. **3** is a perspective view showing a main label applied to a package or container;

FIG. **4** is a perspective view showing the inner or dependent labels of this invention affixed to a container;

FIG. **5** is a perspective view showing the label forming dies of this invention; and

FIG. **6** is a partial cross sectional view showing the label forming dies cutting a label of this invention.

DESCRIPTION OF THE PREFERRED EMBODIMENT

FIG. **1** of the drawing shows a roll **11** of labels **13** manufactured in accordance with the teachings of this invention. The labels are attached to a backing sheet **15.** The surface of the backing sheet facing the labels is coated with a suitable release agent such as silicone. Each label **13** includes an indicia carrying sheet **17** generally formed of paper and having a layer **19** of a pressure sensitive adhesive formed on the rear surface thereof.

As can be best seen in FIG. **1,** the labels **13** are not as wide as the backing sheet **15** and a spacing is provided between adjacent labels. Directly behind each label, the backing sheet is cut along a closed line **21** which is located inwardly of the periphery **23** of the label. The closed cut line **21** defines a backing portion **25** located entirely within the boundaries of the label **13.** While the backing portion **25** is shown in this embodiment of the invention having its entire periphery **27** spaced inwardly of the periphery **23** of the label, it should be understood that on one or more sides the periphery of the backing portion and the periphery of the label may be coextensive.

The indicia carrying sheet **17** is cut completely through along one or more closed lines **31** thereby forming configurations **33.** The configurations **33** may be abutting one another as shown in the drawings or may be spaced apart according to the size of the configurations desired and the number of configurations formed as part of each label **13.** However, the configurations **33** must be located within the periphery of the backing portion **25** formed by the boundary line **21** cut through the backing sheet **15.** The layer of pressure sensitive adhesive **19** may be omitted from one edge portion **35** of each interior configuration **33** to facilitate easy removal of the interior configurations from the main label **13.** The adhesive may be omitted on vertical edges of the interior labels **33** as shown in the drawings or may be omitted along horizontal edges of the interior labels.

The indicia carrying sheet **17** of each label **13** may have indicia **39** imprinted or otherwise affixed to the face or front surface thereof. Additionally the inner labels or configurations **33** may have indicia **41, 43** and **45** imprinted or otherwise affixed thereto. The indicia of each inner label **33** may be similar to that of each other inner label or may be different as indicated in the drawings. For example, one of the configurations **33** may be in the nature of a coupon as shown by the indicia **41.** The other inner labels or configurations **33** may have decorative designs imprinted thereon as indicated by the indicia **43** and **45.**

The dies used in forming the labels **13** of this invention are shown in FIGS. **5** and **6** of the drawings. A main label cutting die **51** cuts the indicia carrying sheet **17** which may conveninetly be a self-adhesive label stock. This die may be part of a compound label die having an inner cutting portion **53** which also cuts the label stock to form the inner labels or configurations **33.** A backing sheet die **57** is positioned on the opposite side of the backing sheet **15** and cuts completely through this sheet. The outer periphery of the die **57** is located within the outer periphery of the cutting die portion **51** and surrounds the outer periphery of the inner cutting die **53.** Although the dies shown in FIGS. **5** and **6** provide only one inner label or configuration **33** it should be understood that showing is for clarity of illustration and that multiple inner cutting dies **53** may be provided.

The use, operation and function of this invention are as follows:

A label **13** of this invention is particularly useful when the inner labels or configurations **33** are to be used for coupons or for labeling components or subparts of the package or container to which the main label is affixed. When a label **13** is removed from the backing sheet **15** is separates along closed line **21** leaving a backing portion **25** affixed to the rear surface of the label indicia carrying sheet **17.** The only adhesive on this sheet that is then exposed for adhering the label **13** to a package **61** is that located between the outer periphery **23** of the label and the boundary or periphery **27** of the backing portion **25** still affixed to the label **13.** The label may then be adhered to a package using this border of adhesive in the manner shown in FIG. **3.**

In the event it is desired to remove one of the inner labels or configurations **33** from the label **13,** this can easily be accomplished by grasping an edge of an inner label **33** along an edge portion **35** which does not have a layer of adhesive applied to the rear surface thereon.

The inner label **33** is then peeled from the main label **13** and may be applied to a container **63** in the manner shown in FIG. **4**.

Whereas three inner labels **33** are shown affixed to the container **63**, it may be and usually will be desirable that only one of the inner labels **33** be affixed to each container. However, as shown in this embodiment of the invention, the inner label **33** having the configuration indicia **41** thereon may be a coupon while the inner labels **33** having decorative indicia **43** and **45** thereon may be attached to a container **63** for other purposes such as identification or pricing. Although not shown in these drawings, it should be understood that the main label **13** may carry other indicia such as the name of the manufacturer, distributor, packer, etc., or other information identifying the container or package to which the label is affixed. Also, it should be kept in mind that the disclosure herein is of a preferred embodiment of the invention only and that the scope of invention should be limited only by a liberal interpretation of the claims attached hereto.

I claim:

1. A multiple part label including:

a sheet of paper having indicia on one side thereof,

a coating of a pressure sensitive adhesive on the other side of said sheet of paper,

a backing sheet positioned in contact with said adhesive and having a silicone release agent on its surface contacting said adhesive,

said backing sheet being wholly severed in a configuration having a periphery none of which is located outwardly of the periphery of said sheet of paper, and

at least one inner label formed in said sheet of paper by wholly severing said sheet of paper with said inner label having its periphery located within the periphery of said backing sheet configuration.

2. The label of claim **1** in which the portion of the backing sheet located outwardly of the configuration is removable and extends around the periphery of said sheet of paper.

3. The label of claim **1** in which said backing sheet extends outwardly beyond the periphery of said sheet of paper.

4. The label of claim **1** in which at least one edge portion of said inner label is without a coating of adhesive to facilitate separation of said inner label from said sheet of paper.

5. A multiple part label including:

a sheet of paper having indicia on one side thereof to form a label,

a coating of adhesive on the other side of said label,

a backing sheet positioned in contact with a portion of said adhesive leaving a portion of said adhesive exposed around at least a part of the periphery of said label with said backing sheet having a release agent on its surface contacting said adhesive, and

at least one inner label formed in said first label by wholly severing said first label with said inner label being located within the periphery of said first label.

6. The label of claim **5** in which at least one edge of said inner label is without a coating of adhesive to facilitate removal of said inner label from said first label.

* * * * *