Jan. 9, 1973 B. CHANDLER 3,709,762

PRESS FOR A WOODEN TRUSS

Filed Sept. 1, 1970 5 Sheets-Sheet 1

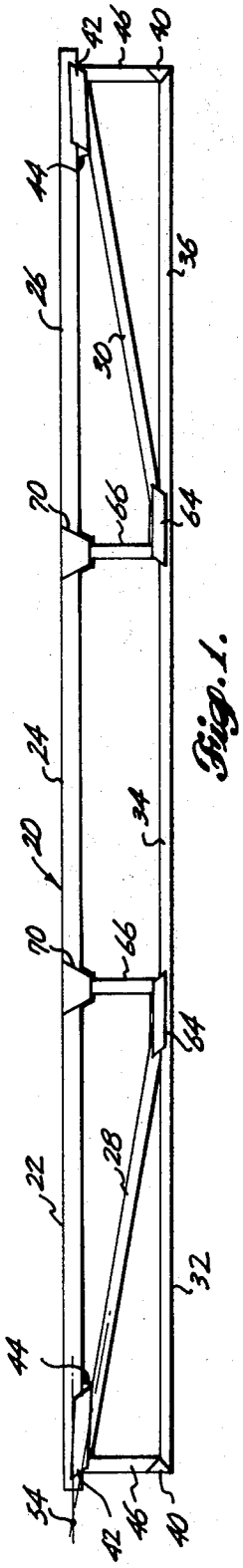

Fig. 1.

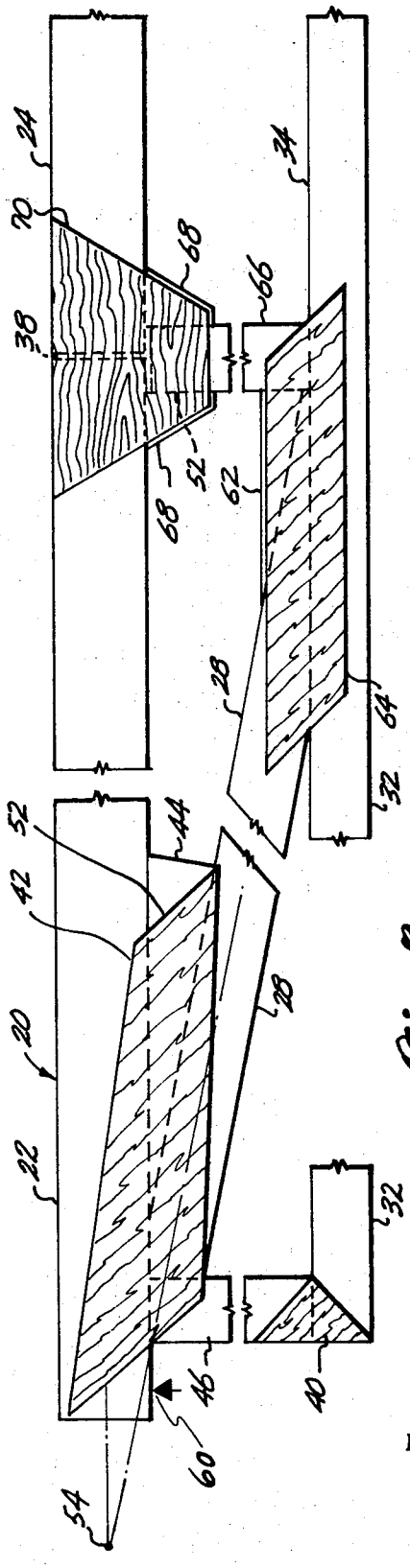

Fig. 2.

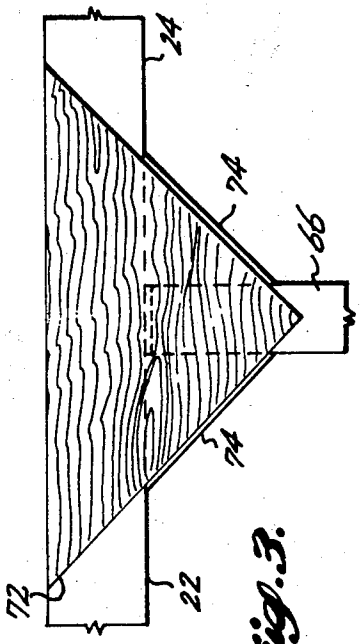

Fig. 3.

INVENTOR.
BENSON CHANDLER
BY
Roy Mattern Jr.
ATTORNEY

Jan. 9, 1973 B. CHANDLER 3,709,762

PRESS FOR A WOODEN TRUSS

Filed Sept. 1, 1970 5 Sheets-Sheet 2

Fig. 4.

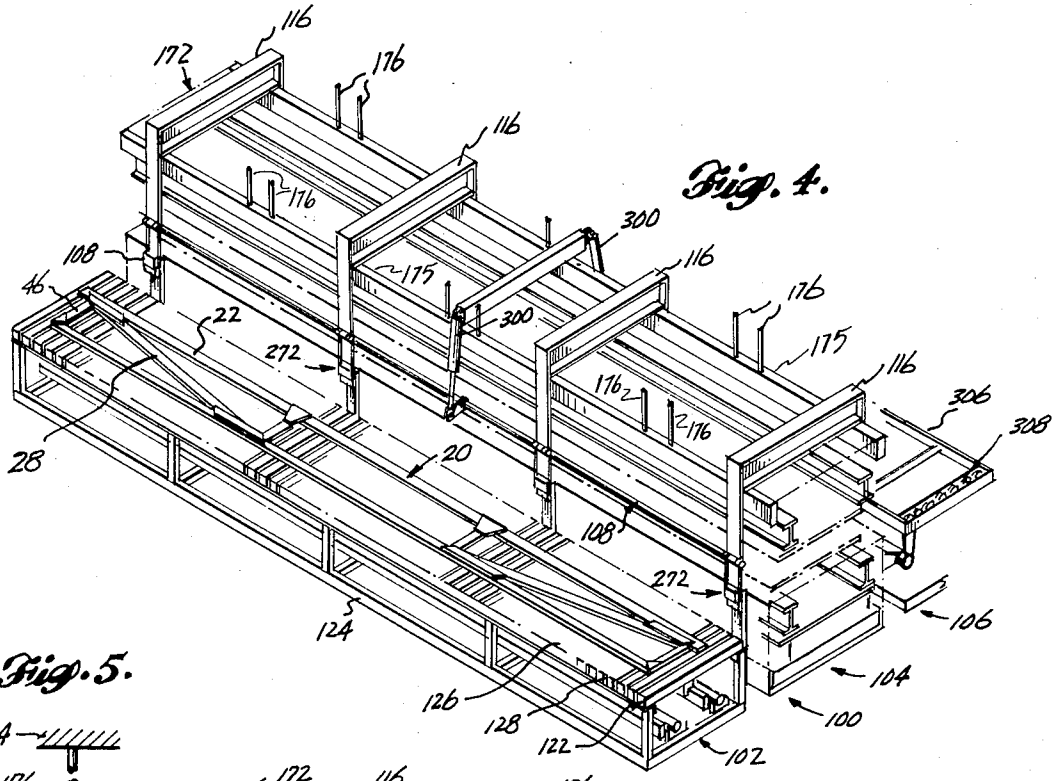

Fig. 5.

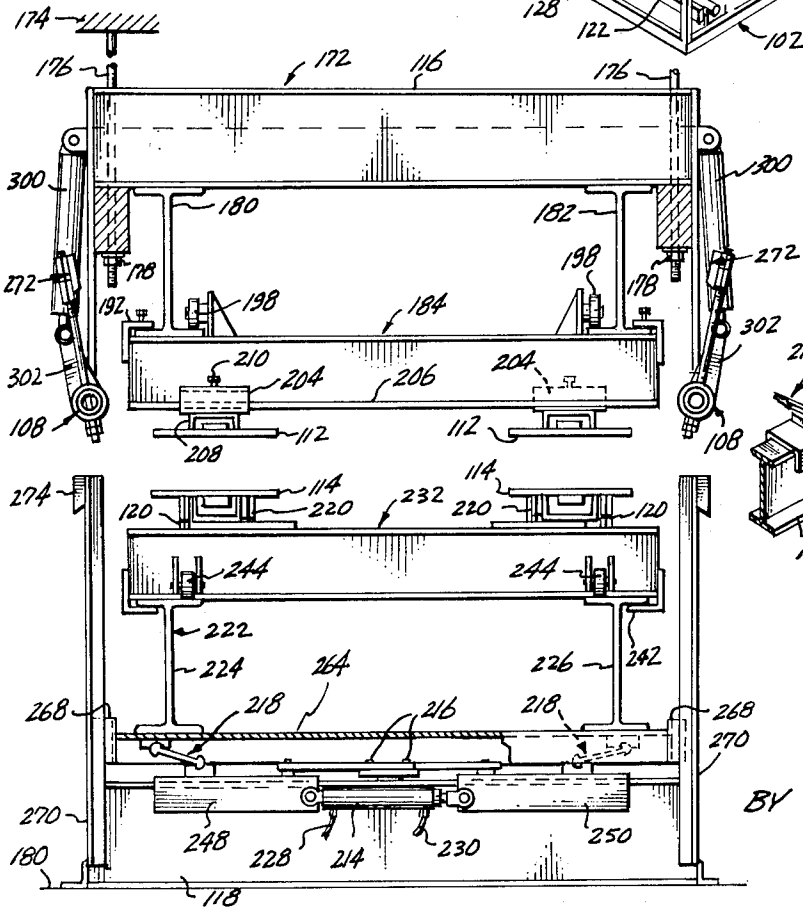

Fig. 6.

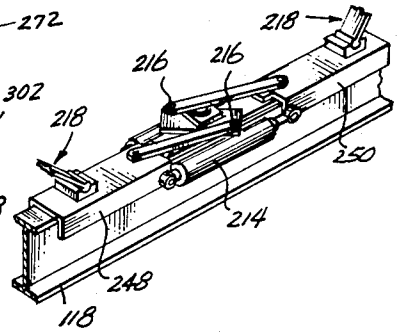

INVENTOR
BENSON CHANDLER
BY Roy Mattern Jr.
ATTORNEY

Jan. 9, 1973 B. CHANDLER 3,709,762

PRESS FOR A WOODEN TRUSS

Filed Sept. 1, 1970 5 Sheets-Sheet 3

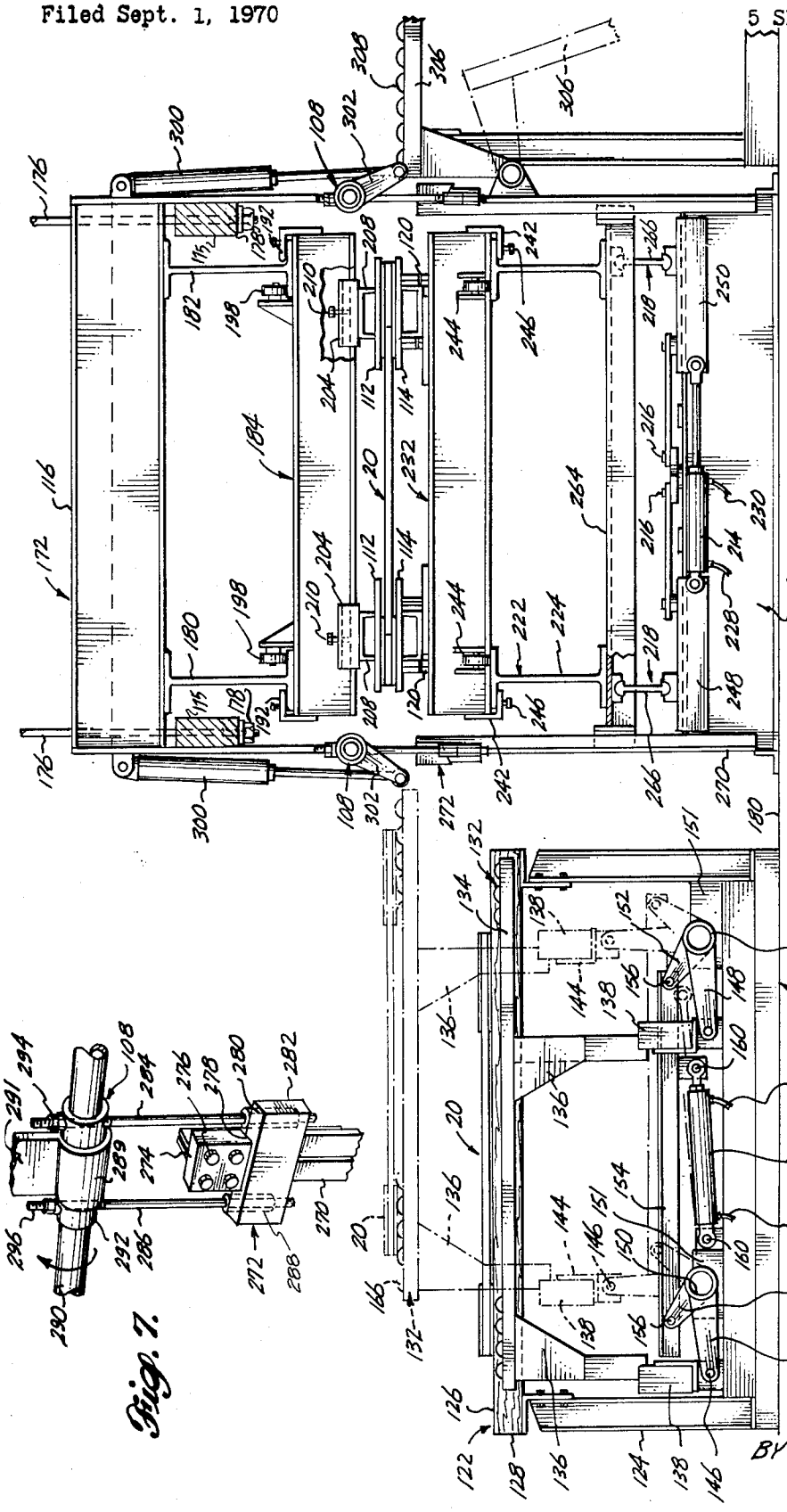

Fig. 8.

Fig. 7.

INVENTOR
BENSON CHANDLER
BY Roy Mattemp.
ATTORNEY

Jan. 9, 1973 B. CHANDLER 3,709,762

PRESS FOR A WOODEN TRUSS

Filed Sept. 1, 1970 5 Sheets-Sheet 4

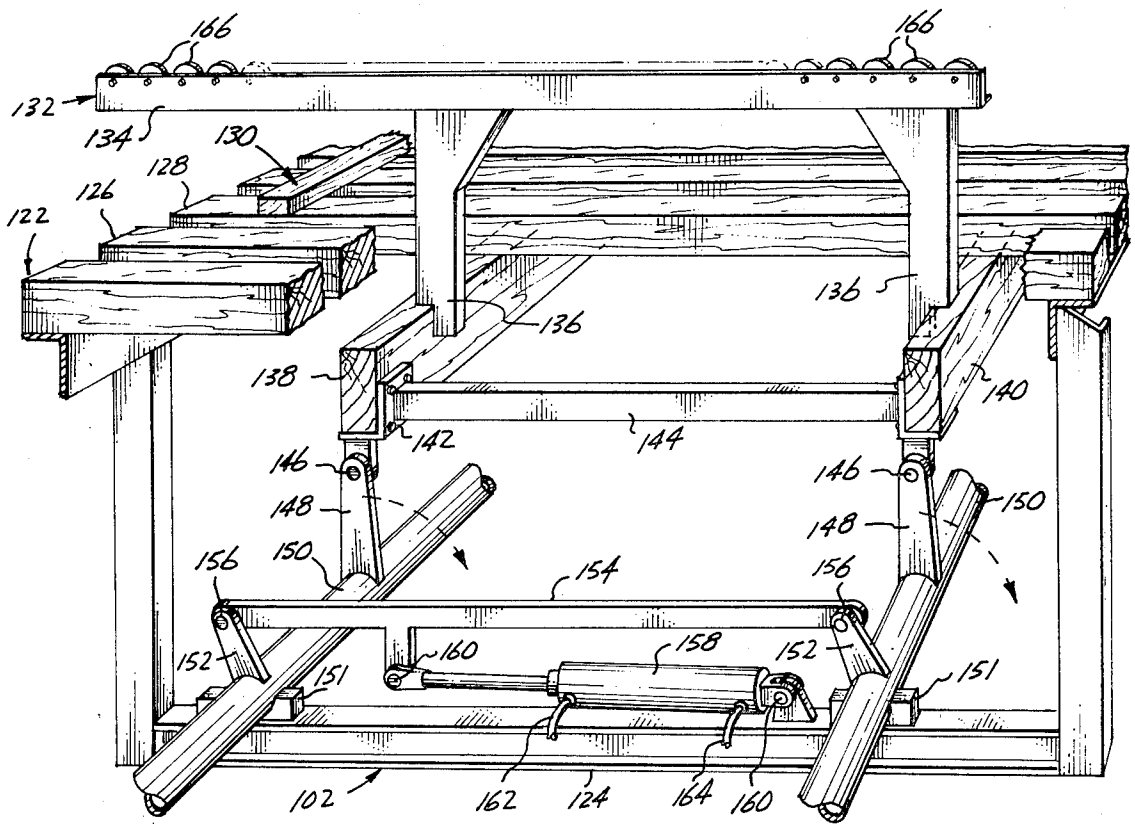

Fig. 9.

INVENTOR
BENSON CHANDLER

BY Roy Mattern Jr.

ATTORNEY

Jan. 9, 1973 B. CHANDLER 3,709,762

PRESS FOR A WOODEN TRUSS

Filed Sept. 1, 1970 5 Sheets-Sheet 5

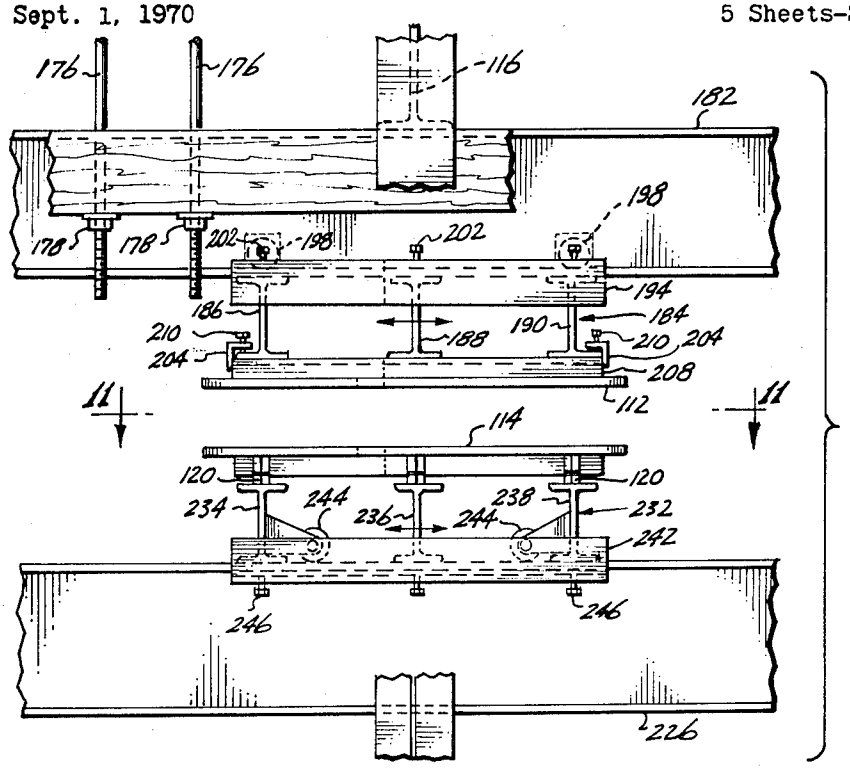

Fig. 10.

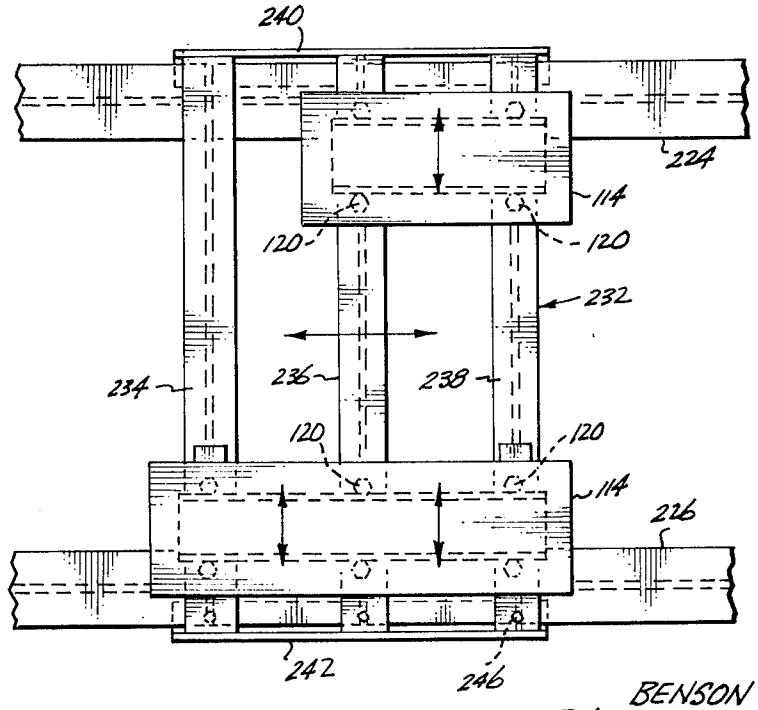

Fig. 11.

INVENTOR
BENSON CHANDLER
BY
Roy Mattern Jr.
ATTORNEY

United States Patent Office 3,709,762 Patented Jan. 9, 1973

3,709,762

PRESS FOR A WOODEN TRUSS

Benson Chandler, P.O. Box 224, Medina, Wash. 98039

Filed Sept. 1, 1970, Ser. No. 68,715
Int. Cl. B32b 31/00; B30b 1/10
U.S. Cl. 156—580 11 Claims

ABSTRACT OF THE DISCLOSURE

To create and to meet a new wood products market for factory fabricated all wood structural components, such as joists and trusses, new methods and apparatus are made available. Whole wood boards are positioned to include spaces to form an overall contour of a larger structural sub-assembly. Thereafter, their fitted and/or near abutment portions are overlaid first with glue and then with selectively formed and grain orientated plywood reinforcements, which may either in the alternative or in addition be overlaid with glue before their placement.

All the joining surfaces between all whole wood and plywood components are secured together, by utilizing methods and apparatus, wherein glue alone, as a fastening agent, is thoroughly and uniformly distributed under controlled forces created by new apparatus. During fabrication of these new wood products, high contact pressures are maintained while both environmental and glue temperatures are closely controlled, whereby, strong joints and resulting overall all wood structures of great strength are produced.

Moreover, the methods employed and the apparatus utilized make it possible to produce these all wood products more efficiently within a comparatively shorter factory building, as transverse rather than longitudinal movements of the all wood products are undertaken during their production.

BACKGROUND OF THE INVENTION

As set forth in the United States patents of others, such as 2,520,333; 3,067,544; and 3,170,198, and in the applicant's patent 3,345,792, wood built construction of principal structural components of buildings have been indicated wherein no or little reliance was placed on metallic fasteners. However, there remained requirements for stronger all wood principal structural components, secured together with glue without reliance upon metallic fasteners, which could be fabricated and sold in competition with combined wood and metal, and all metal principal structural components, such as joists, trusses, etc.

Therefore an integrated analysis, was undertaken of: embodiments of all wood structural products; available adhesives, fillers and combinations and mixtures thereof; embodiments of apparatus and of related factory layouts. The initial analysis indicated past and current designs, development, and inventions were not meeting the competition of combined wood and metal, and all metal principal structural components, because the resultant overall strengths were not to be realized while still providing a competitive product. As a consequence, new embodiments of products, new manufacturing apparatus, and new methods of fabrication were all relatedly invented together to offer, competitively these all wood principal structural components.

SUMMARY

All wood fabricated principal structural components for erection in overall structures are offered in competition with combined wood and metal and all metal structural components. They are secured together without any inclusion of metallic fasteners. Sole reliance is placed upon strengths of controlled glue lines and surfaces. Whole wood components are arranged to form a selected fabricated structural member, such as a joist or truss, and then they are positioned and held by gluing grain orientated, overlying, plywood components at their joining locations. Throughout all whole wood and plywood components, their best strengths, based on their respective directional orientation of their wood grains, are relied upon to obtain the maximum overall resultant strength of any selected embodiment of these all wood fabricated principal structural components.

The methods of fabrication and apparatus utilized in producing them center on their transverse movements throughout assembly, pressing and finishing stations, wherein, at all times minimum overall handling is necessary and only minimum fabrication areas are needed. The repeating production results are all wood fabricated structural components, such as joists and trusses, which are stronger than any heretofore known all wood components ever produced, with the purpose in mind of being able to competitively price them in competition with other types of structural components comprising either all metal members or combined metal and wood members.

DRAWINGS OF PREFERRED EMBODIMENTS

Selected embodiments of both an all wood fabricated principal structure components and of production apparatus are illustrated in the drawings, wherein:

FIG. 1 is an elevational view of a selected all wood fabricated principal structure component designated as a rigid frame joist with an eccentric end configuration;

FIG. 2 is a partial enlarged view, with portions removed for illustrative purposes, showing in particular the overlaid plywood components at joints of whole wood components of the rigid frame joist shown in FIG. 1;

FIG. 3 is a partial elevational view of only one locale of overlaid plywood components at joints of whole wood components showing another positioning of the overlaid plywood, filler whole wood components, and filling grout than that shown in FIGS. 1 and 2;

FIG. 4 is a perspective view of an overall embodiment of production apparatus wherein transverse fabrication stations are efficiently and conveniently arranged, with a fitting jig table, press platens and final inspection or delivery table which are all arranged adjacent one another;

FIG. 5 is a partial end view of the production apparatus illustrating the pivotal and retractable holddown reaction subassemblies providing for the transverse quick entry and exit of fabricated joists with respect to the press station;

FIG. 6 is a partial perspective view of some of the hydraulic and mechanical actuator parts, also shown in FIGS. 4, 5, and 8, which move opposed motion components of the press relative to one another;

FIG. 7 is a partial perspective view of one pivotal, interlocking, assembly of the overall frame of the press to complete the press load reaction structures;

FIG. 8 is a substantially complete end view of the production apparatus, illustrating with dotted lines and directional arrows, how hydraulically actuated transfer linkages are used to remove an assembled joist from its assembly station, raise it and transfer it to its pressing station, how opposed motion components of the press are relatively moved to press an assembled joist, and how a released assembled joist is directed to an inspection station and loaded onto a conveyance;

FIG. 9 is a partial enlarged view with portions broken away and modified and simplified in part and also using motion arrows, to illustrate how one of several transverse lifters are simultaneously moved to raise an assem-

bled joist from horizontally positioned jig and to translate this assembled joist for its loading into the adjacent press station;

FIG. 10 is a partial side elevation of the press station, with portions broken away and motion arrows used to illustrate the adjustable and relocatable pressure application platen subassemblies that are selectively positioned over overlying plywood reinforcements located at all joints of whole wood members to fully transfer the press loads to each joint in its entirety and while so doing optionally heating the joints as heat is applied from within the platens; and

FIG. 11 is a partial sectional view taken along line **11—11** of FIG. 10 of the press station, with portions broken away and motion arrows being used to further illustrate the adjustable and relocatable pressure application platen subassemblies.

DESCRIPTION OF PREFERRED EMBODIMENTS

Introduction to entire description

Throughout this description of preferred embodiments of a new product, new method and new apparatus resulting from commencement of an overall integrated analysis, the interrelationships of the requirements of product, method and apparatus are set forth with references being made to the drawings. The description commences first with a presentation of a preferred embodiment of the product which is fulfilling a competitive position in the marketplace. Then, a preferred embodiment of the method is described which insures the strength and quality of all products. In conclusion, a preferred embodiment of apparatus is explained which offers an economically operated facility for performing the method to create the strong, high quality, and competitively offered all-wood principal structural components.

Introduction to all wood principal structural component

In FIGS. 1, 2, and 3, a preferred embodiment of the product is shown. It is an all wood principal structural component **20**, best referred to as a truss and shown in a configuration to be used as a roof and/or floor joist. All of its various composite pieces are secured together with glue. No fasteners are used.

To indicate the efficient utilization of wood that is possible, a three panel truss **20** is illustrated in FIG. 1. Always top or loading bearing chords **22, 24, 26** diagonal end members **28, 30** and lower chords **32, 34, 36** are of the same transverse thickness. These whole wood prime members are glued together and, only in compression joints, flowable and hardening filler is used as necessary. Then they are, in addition, connected together by gluing plywood supplemental members such as gusset and/or haunch plates **40, 42** located selectively at the whole wood joints. In some locations, smaller whole wood blocks serve as wood filler members. They are fitted and glued between converging whole wood members **22, 28** and adjacent the overlying plywood gusset or haunch plates **40, 42**. All of these composite members of all wood principal structural components **20**, such as the illustrated three panel truss **20**, serve one or more load carrying functions and/or load distribution requirements to create a stronger overall product **20**.

Commencing with an understanding of current research findings, based on structural whole wood and structural plywood tests, each of these composite members of an all wood structural component **20**, has been sized and placed to create an overall beneficial distribution of an entire resultant loading that is expected to occur upon the installation of such component **20** in an overall structure, such as a factory and/or office building, not shown. In summary, these research results are: in comparison to other structural building materials, wood, in reference to its weight and cost, has a comparatively high tensile and compressive strength; the bending strength of wood is 25% to 33% greater than either its tensile or compressive strength; the tensile strength of wood in comparison to its compressive strength ranges down to about 80% of its direct compression strength; the ratio for wood is 1 to 16 with respect to its horizontal shear strength when compared to its bending strength; moreover, wood has nominal bearing strength transverse to its grain.

Therefore, these research results indicate how this all wood structural product **20** has been developed to selectively acquire the maximum utilization of bending strength of each respective composite member of these particular trusses, etc., positioned in their overall combined configuration, when such bending strength is known to be advantageous in reducing, tensile stresses, compressive stresses, and/or shear stresses. Moreover, this all wood structural product **20** has been developed by utilizing a glue, only, fastening method which is compatible with acquiring this maximum utilization of the bending strength while keeping both the shear stresses and bearing stresses at a reduced level.

Further, to acquire this new all wood structural product **20** of greater strength, while comparatively reducing the overall weight of the wood in each truss **20**, etc., its joints have been made essentially rigid to thereby make the entire truss **20** essentially rigid. In so doing, each joint, as necessary is capable of fully developing the bending strength of the related transversely loaded members. Each truss of joist **20**, has wide spaces between joints, i.e. wide panels. As illustrated in FIG. 1, truss or joist **20** has a 3 panel configuration with a rigid frame which comprises in effect a loop of chords and diagonals. Its top chord **22, 24, 26** is subjected to a compressive stress that is comparatively lower than chord stresses occurring in less rigid trusses of other designs.

The rigidity is obtained by not using penetrating, tearing and/or cutting fasteners, but instead by utilizing glue **52**, with wood fillers **44**, wood-like softened fillers **38** that harden, and overlying thin plywood pieces, that are specially shaped and grain orientated to become gussets **40** and haunches **42**.

Glue line integrity is enhanced by using a glue **52** selected from one of several proven elastic adhesives. Preferably those which are moisture resistant are used, such as melamine formaldehyde and resorcinal formaldehyde. To the latter, a phenolic compound may be added for economy. These glues are easily cured during short heating periods under sufficient pressures so high production rates are possible. The utilization of the this plywood overlays **42, 44**, does not unduly hinder the transfer of curing heat during press operations.

At all times the thinness of the plywood gussets **40** and haunches **42** is compatible with prime requirements of load distribution. Each plywood overlay **40, 42**, especially the very long ones have sufficient reserve strength to avoid tearing while fully developing the maximum compression and tension in the adjoining whole wood composite members of a truss **20**, etc. Moreover, the thinness of the plywood overlays **40, 42** insures the wanted development of shear strength across contacting faces of whole wood to plywood throughout their narrow overlapping portions.

The plywood gussets **40** or haunches **42** are shaped and positioned so their wood grain fibers are arranged at about 45° to the joint line between the whole wood members such as a top chord section **22** and diagonal end member **28** covered by haunch **42**. Also, the haunches **42** have their important overall edge contour shapes. These gussets **40** and haunches **42**, although made of thin plywood, meet the overall specifications, for example, for a truss **20** designed for a sixty foot span to carry the roof load, yet the plywood material is made of plys totalling from ¼ to ⅜ inch in thickness.

To further develop, the entire continuity of wood and compatible wood gluing and wood filling products **38**, all the intended designed spaces between the near joining compression butt ends of whole wood composite truss mem-

bers are filled with a nonshrinkable high strength grout, Such a product is known by the trade name of "Por-rock" which is believed to be a starting mixture of portland cement and a filler, and at the time of use a catalyst is added. However, any non-shrinking grout that is water setting may be used.

As indicated previously, the best strength properties of whole wood and plywood are utilized in these trusses **20**. In this regard, to obtain the efficient utilization of the minimum wood and plywood composite truss members with corresponding reduction in factory production times, bending stresses are uniquely redistributed as already shown and described in conjunction with the utilization of gussets **40** and haunches **42**. Moreover, where a more beneficial distribution of all stresses, expecially through redistribution of bending stresses, is needed to reduce the material and fabrication time costs, then bending stress resistance is enhanced at the places of support for respective truss ends. Such buildup of this resistance is undertaken by providing a very rigid end truss connection to a support, not shown, in an eccentric configuration as illustrated in FIGS. 1 and 2. The truss **20** is secured to such a support, wall or column, not shown, as top chord **22** rests on the support. In such position, a haunch **42** overlay is used with, preferably, a whole wood filler block **44** and these components are secured by glue **52**.

The effective eccentric configuration is further observed by noting in FIGS. 1 and 2, for example, that when the respective centerlines of top chord section **22** and diagonal end member **28** are imaginarily extended transversely, they meet at a point **54** which is beyond the location of an eventual support, such as a wall or column, that is schematically symbolized by the support arrow **60**. This illustrates how this eccentricity at the time of the truss design may be calculated so the exact required bending moment will be transmitted to the respective end of a top chord section **22** and beyond to the middle top chord section **24** through their rigid overall connection **70**. By applying this bending moment into top chord **22**, the bending moment in diagonal **28** is simultaneously reduced by an amount proportionate to its stiffness, relative to the stiffness of chord **22**. Bending is thereby removed from diagonal **28**, where it is undesirable, and placed into chord **22**, where it is needed to reduce overall bending, transferred through rigid connection to chord **24**.

Such relocation, modification and/or redistribution of bending forces through such transmission of forces is only undertaken when it is beneficial in modifying tensile and compressive forces at various locations throughout truss **20**. A design and stress analysis followed by the manufacture of a truss **20** in accordance with the design using the method and apparatus of this invention, results in the production of a truss **20** which carries comparatively larger loads while requiring a smaller overall mass of wood.

In regard to the embodiment illustrated, the redistribution of bending forces is undertaken at each truss end at the joint of top chord section **22** or **26**, and diagonal end member **28** or **30**, by using a whole wood filler block **44** and a long plywood haunch **42** in a glued assembly. The upper, outer points of haunch **42** are required to be extended to strengthen the end of top chord **22**, which must resist entire load, and also to resist pealing haunch **42** caused by large rotational forces. The rigidity of these end joints is enhanced as the respective opposite ends of diagonal end members **28** or **30** are joined to central vertical strut or leg **66**, and lower chord sections **32**, **34** and/or **36** by employing whole wood filler blocks **62** and plywood haunches **64** with glue being evenly distributed throughout the joining surfaces.

At the joining of top chord section **24**, at its respective ends, to respective chord sections **22** and **26** and to central vertical struts or legs **66**, the joints are filled in part with a flowable hardening filler **38** which elastically compensates for contraction of whole wood composite members, thereby avoiding unwanted and unnecessary internal stresses. The filler **38** also forms a T, which bears against wood filler **68** and forms a larger section for bending resistance. Also, glue **52** is used throughout between the joining surfaces of either wood to wood or wood filler. Whole wood fillers **68** and a plywood central gusset **70** continue the redistribution of the bending loads.

For further enhancement of the overall rigidity of truss **20**, gussets **40** are used where respective lower chord sections **32** and **36** join respective end leg or struts **46**.

Wherever a plywood gusset or haunch is employed to play its role in maintaining rigidity and/or in transferring, redistributing, and modifying bending forces, or in carrying other forces such as those which would otherwise cause tearing, the grain patterns are always arranged in a designated direction, as illustrated throughout the FIGS. 1, 2, and 3 with shading lines indicating such grain arrangements in the outer layer or ply of plywood. For example, haunch **42** has its outer plywood grain running on a forty-five degree angle pattern.

However, as indicated, where bending and compression only are to be transferred, as through haunches **70** and **72**, the outer plywood grain is always parallel to top chord sections **22**, **24**, **26**.

By comparing FIGS. 2 and 3, with respect to the joining of top chord sections **22**, **24**, **26** to central vertical struts or legs **66**, modifications of the plywood gusset or haunches **70**, **72** with slight changes of whole wood fillers **68**, **74** are possible within a range of specified bending stresses that are to be utilized beneficially to create a truss **20** of comparatively greater strength from an assembly of wood of the same or lower overall weight. T plug of grout **38** and haunch-shaped parallel plywood **70** is specifically required, unless bending is too great, and then a continuous member replaces chord portions **22**, **24**, **26**.

INTRODUCTION TO METHOD OF MAKING AN ALL WOOD PRINCIPAL STRUCTURAL COMPONENT

The all wood principal structural component **20** in the illustrated embodiment or in its other embodiments, not shown, will only serve its designed load function if all of its components are, in every joint, sufficiently secured together. In this truss **20** glued together and not held by other fastening means, the contact of adjoined components through the glue must be thorough and strong. Lack of glue and/or too much glue must be avoided. Wherever glue is specified it must be there in the right quantity and be in thorough contact with adjoining components. This method of this invention insures that all the glued joints will be so constituted. Stated in another way, there will be adequate and uniform glue line contact throughout, which is often referred to as glueline integrity.

THE METHOD OF MAKING AN ALL WOOD PRINCIPAL STRUCTURAL COMPONENT

The method comprises the following steps to create a designed principal structural component **20** composed entirely of wood:

(1) Cutting whole wood members from specified cross sectional shaped lumber having grain running longitudinally to serve as the principal members of a principal structural component such as a truss;

(2) Cutting whole wood filler members;

(3) Cutting plywood gusset and haunch members with grains running on a bias with respect to both principal members being joined;

(4) Arranging all the components of whole wood on a level layout support placing them in near contact with each other;

(5) Coating all whole wood surfaces to be joined with glue such as phenol resorcinol formaldehyde at a temperature of 70° F.;

(6) Filling butt voids in top chord with a nonshrinking filler such as "Por-rock" at a temperature of 70° F.;

(7) Arranging jig members to transversely hold all the components of whole wood in their level layout positions with glue lines in full contact;

(8) Coating with glue such as phenol resorcinol formaldehyde at a temperature of 70° F. all plywood to whole wood engaging surfaces at the component joints;

(9) Placing the plywood over at least one side of each joint of components;

(10) Compressing the whole wood and plywood together uniformly under a pressure in the range of 100 p.s.i. to 600 p.s.i., while maintaining the temperature in and about the joint between 150 and 400 degrees Fahrenheit for a period of 30 seconds to 30 minutes;

(11) Removing the compression forces and the transverse holding forces freeing the completed principal structural component; and

(12) Allowing the temperature to drop to the environmental temperature of 50 to 70 degrees Fahrenheit.

These are steps, with some withdrawals and/or additions which are followed to create an all wood principal structural component such as truss **20**, of comparatively greater strength than previously fabricated wood components yet using an assembly of wood of the same or lower overall weight.

INTRODUCTION TO APPARATUS USED IN FABRICATING ALL WOOD PRINCIPAL STRUCTURAL COMPONENTS

An all wood principal structural component such as truss **20** made by following a method which assures glueline integrity is best made economically by using apparatus which is easily adjusted and controlled with respect to temperatures and pressures and requires a minimum of processing space. The overall apparatus or machine **100**, illustrated in FIGS. 4 through 11, is the preferred embodiment in which viable all glued comparatively light, low density, open space, trusses, joists, etc., may be economically manufactured. In such manufacture excellent glueline integrity is obtained at all times to maximize the benefits of these rigid frame designs wherein secondary, rotational stresses are developed to redistribute stresses throughout an all wood principal structural component, such as truss **20**, resulting in its economical and quality production.

To reduce space requirements, machine **100** is arranged for transverse movement of the truss **20** from its layout and assembly work area **102** to its press portion **104** and onto its inspection and stacking and/or transporting area **106**. This material flow direction is accommodated by having unique quick opening side members **108** on the press **104** which during compression are carrying the reactive forces.

Throughout the encompassing space surrounding the machine **100**, the environmental temperature is controlled at a selected temperature, within a preferred range of 50 to 70 degrees Fahrenheit. Beyond this controlled temperature, heat source units **110** are utilized in conjunction with pressure application platens **112** and **114** at all joint fabrication locales. Such overall temperature controls insure that no glue will cure too soon before glue line securing contacts are finalized and conversely all glue will cure within an economical processing time limit.

To insure that uniform pressures will be applied throughout each joint at the same level as all other joints of each all wood principal structural component **20**, the principal top and bottom pressing members **116**, **118** of the press **104** of machine **100** are always moved together through a finite distance, so no unwanted excessive crushing of a truss **20** will occur anywhere throughout its length. Such overall finite travel limitation, however, requires that selective preadjustments or settings of commencing clearance spaces be undertaken at the various joints of a truss **20** that are being glued under the specified controlled pressures applied within localized and overall environments kept at specified temperatures. These localized pre-adjustments or settings of commencing clearance spaces existing before top and bottom press member **116**, **118** are moved together through their finite travel, are made by adjusting one or more of many leveling screws **120** that are preferably positioned with lower platens **114**.

All these features are supplemented by using various unique subassemblies of both stationary and moving components which are preferred to increase the speed of production while at all times maintaining the quality of a product **20** which quality centers on insuring glueline integrity. Descriptions of these subassemblies follow in the order of their utilization in the respective layout area **102**, press area **104**, and inspection area **106**, shown in FIG. 4, which is an overall perspective view of machine **100**.

Layout area apparatus

As shown in FIGS. 4, 5, 8, and 9, in layout area **102** of machine **100**, a layout table **122** has a steel frame **124** and wood top **126** composed of spaced transverse boards **128**. An all wood principal structural component **20**, is fitted together on top **126**. Depending on the number of follow-on like components **20** to be manufactured, many different positioning accessories, such as clamps, guides, spacers, abutments, etc., are used in controlling the positions of the chords **22**, diagonals **28**, struts **46**, etc., comprising for example, some of the principal members of a truss **20**, as illustrated in FIGS. 1, 4, and 9.

While the principal members of a truss **20** are so positioned on layout table **122**, they are supplemented by whole wood fillers **44**, **74**, etc., and made ready to receive flowable subsequent hardening fillers **38**. Then they may be glued throughout all joining surfaces and moved into contact or into position to receive the flowable **38**. Subsequently, the plywood gussets and haunches **40**, **42**, etc. are glued and positioned in contact with the joining portions of respective principal members of truss **20**.

Shortly, thereafter, a lifting-transfer mechanism **132** of layout **102** is activated to raise truss **20** and to commence its transfer to press area **104**, as illustrated in FIGS. 8 and 9. At spaced locations throughout the length of layout area **102**, transfer supports **134** are selectively and removably placed between transverse boards **128** of wood top **126** of layout table **122**. They are supported below with their depending legs **136** filled to respective longitudinal rail supports **138**, **140**. The latter are in turn secured with fasteners **142** at spaced locations to transverse brackets **144**. Pivotal connectors **146** are used to join transverse brackets **144** to parallel actuated crank arms **148** that are integral with respective paired, parallel longitudinal torque tubes **150** positioned by bearings **151**, as illustrated in FIGS. 8, and 9, The torque tubes **150** also have respective integral parallel actuating crank arms **152** which are connected together by control rod **154** using pivotal connectors **156**.

A hydraulic actuator **158** is pivotally secured between control rod **154** and frame **124** by pivotal fasteners **160**. Upon the manipulation of controls, not shown, hydraulic fluid under pressure is delivered to actuator **158** through hydraulic lines **162**, **164** shown in part, in FIG. 9. Depending on the direction of fluid flow, control arm **154** is transversely translated to either raise or lower the lifting-transfer mechanism **132**. Upon raising, transfer supports **134** carry a truss **20** up and from its layout area **102** and over for its entry into the adjacent press area **104** as illustrated in FIG. 8. At this transfer locale the departure of truss **20** is made convenient as it travels over the rollers **166** installed throughout transfer supports **134**.

Press area apparatus

As illustrated in FIGS. 4 and 8 the layout, press and inspection areas are located adjacent one another so that

a truss **20** moves transversely, with respect to its length, through the manufacturing process. In the layout and inspection areas **103, 106** such production flow is readily undertaken. However, in the press area **104**, provisions must be made and are made to clear away quick opening side members or vertical structures **108** during entry or exit of a truss **20**. Yet during pressing of a truss **20**, these load reacting vertical side structures **108** must be in a position to carry the reactive loads. Therefore, their convenient manipulation and adjustment is a necessity.

In FIG. 5, press **172** is opening awaiting truss **20** and in FIG. 8, press **172** is closed with truss **20** located between the various platens **112, 114**. Preferably, spaced principal top members **116** of press **172** are secured to an overhead building structure **174**, shown in part in FIG. 5, by using longitudinal support beams **175** and threaded support rods **176**. Any takeup on nuts **178** along rods **176** moves the support beams **175** and therefore the principal top press members **116** upwardly carrying along high platens **112**, as further illustrated in FIG. 10. As indicated in FIG. 8, during pressing operations, top press members **116**, lift off the support beams **175** at least a distance greater than the clearance needed subsequently to separate tensioning members after a pressing operation, as will be discussed.

Between the principal top press member **116** and high platens **112**, in an overall group **179**, are various longitudinal and transverse members, illustrated in FIGS. 5, 8, and 11, which are arranged to be utilized and adjusted so these high platens **112** may be positioned directly over a truss joint. Two overhead longitudinal I beams **180, 182** extend the length of press **172** to support and to guide groupings **184** of high transverse I beams, **186, 188**, and **190**. They are secured together with longitudinal angle pieces **192, 194** which overlay the bottom outer flanges **196** of I beams **180, 182** to serve as guides as the groupings **184** are moved to new positions. Such movement is aided by their rollers **198** which move along the bottom inner flanges **200** of I beams **180, 182**. Once in place, setscrews **202** on angle **194** are tightened.

Transverse adjustments of high platens **112** is undertaken as their above positioned guide angles **204** follow along the lower flanges **206** of at least two transverse beams **186, 190**. These guide angles **204** are secured to short longitudinal channels **208** to which high platens **112** are also directly secured. Setscrews **210** are used to maintain their selected adjusted positions over designated truss joints during a pressing operation.

Between the principal bottom press members **118** and the low platens **114** are various longitudinal and transverse members, illustrated in FIGS. 5, 8, 10, and 11, which are arranged to be utilized and adjusted so these low platens **114** may be positioned directly under a truss joint. Then when pressing is undertaken, a substantial number of low platens **114** are moved upwardly with a truss **20**, through a finite distance under the power of a hydraulic actuator **214** working through a multiple drive toggle mechanism **216** and a multiple driven toggle mechanism **218** to contact the high platens **112**. To compensate for truss irregularities, etc., adjusting screws **120** are used throughout the low platen supports **220**. Therefore, the finite travel of the overall low platens **114** results in substantially similar pressures being applied at all truss joints.

In the overall group **222** of various lower longitudinal and transverse members are the lower longitudinal I beams **224, 226** respectively positioned below overhead longitudinal I beams **180, 182**. Throughout their length they are uniformly raised as toggle mechanisms **216, 218** are moved upon operation of hydraulic actuator **214** served by hydraulic lines **228, 230**. Groupings **232** of lower transverse I beams **234, 236** and **238** are guided along beams **224, 226** being connected together and directionally constrained by angles **240, 242** and aided by rollers **244**. Once in position their set screws **246** are tightened.

In FIG. 6, the toggle mechanisms **216, 218** are shown more clearly in a partial perspective view. Positioned along the top of principal bottom press member **118**, are two slidable channel followers **248, 250**. Connected between them is hydraulic actuator **214**. Also each follower **248, 250** is pivotally joined to a connecting bar **252** of toggle mechanisms **216** by respective pins **254**. These connecting bars **252** in turn are then pivotally secured to the respective ends of a double crank arm **256** by pins **258**. Crank arm **256** in turn is pivotally secured to the top of bottom press member **118** by pin **260**. At the spaced outer ends of followers **248, 250**, are bearing receivers **262**. They serve with like bearing receivers **262** positioned above in the interior of a transverse channel **264** secured to the bottoms of low longitudinal I beams **224, 226**. They assist in the transmission of lifting forces between and through them, upon the righting movements of the confined pushed pry bars **266** which are caused to occur when hydraulic actuators **214** are extended moving followers **248, 250**. The vertical height of pry bars **266**, arms, struts or supports **266** is the compression travel limiting means so the overall forces of the hydraulic actuators will be selectively restrained to avoid any excessive pressures and thereby to avoid unwanted crushing of any wood in a truss **20**. At all times, the vertical movement of transverse channel **264** is guided at each of its ends by followers **268** secured to it and partially enclosing a vertical tension T bar **270**, secured to the bottom principal press member **118**. Moreover, selective and effective spot adjustments of this limited overall travel are initially made by turning the spacer or leveling screws **120** at the low platens **114**.

However, before any compressive forces are applied to a truss **20**, utilizing the finite travel of these toggle mechanisms **216, 218**, the principal top press members **116** are connected to principal bottom press member **118** at each pair of their respective sides by a quick opening side member assembly **108**, inclusive of a multi-piece adjustable latching means **272**, shown in detail in FIG. 7 and in the overall assemblies in FIGS. 4, 5, and 8. Secured to the bottom principal press members **118** are vertical tension T bars **270**. Latch plates **274** are secured to the respective tops of T bars **270** with bolts **276**. The bottoms **278** of lower latch plates **274** are beveled upwardly and inwardly. These beveled locking structures are respectively matched by the tops **280** of wider upper latch plates **282** which upon engagement are positioned below lower latch plates **274**. Spaced, anchored tension rods **284, 286** are passed up through end located receiving holes **288** in the wider upper latch plates **282** and secured. Also tension rods **284, 286** are nonrotatably secured above on rotatable torque tube or cylinders **290**, so they will rotate with the torque tubes **290**. They are secured by passing them through holes in torque cylinder **290**, where a sleeve reinforcement **292** is positioned. They are adjustably positioned by using an adjustable nut **294** turned on threads **296** of each tension rod **284, 286** to accurately vertically position all of the components of each quick opening side member assembly **108**. This includes the uniform interfitting of the beveled locking structures that are provided on both the lower and upper latch plates **274, 282**. The threaded adjustments insure each quick opening side member assembly **108** will be carrying its full reacting tensile force. The torque tubes **290** are held in bearing structures **289** on tension plates **291** secured to the principal top press members **116**.

When the positioning of these beveled locking structures **274, 282** is undertaken before the press is unloaded, they remain apart. Only after the pressing operation commences do they contact one another and then transmit the tension forces. At this pressing operational time, the top press members **116** lift off their support beams **175** at least a

distance greater than the clearance needed to subsequently clear beveled locking structures, **274, 282**, after the pressing operation is completed.

Therefore when a press operation is completed the top half of the press lowers about one half an inch in most embodiments providing the clearance needed to separate the locking structures **274, 282**. Then upper latch plate **282** is further cleared away to accommodate an incoming or outgoing truss **20**, as shown in FIG. 5. This is quickly accomplished as a hydraulic actuator **300** moves a crank arm **302**, that is nonrotatably secured to rotatable torque tube **290**. Upon rotation of torque tube **290**, all upper latch plates **282** and their tension rods **284, 286** swing out of the way of any truss **20** that is ready to be moved in or out of press **104**.

Inspection, stacking and/or delivery area

Following the pressing of an all wood principal structural component, such as a truss **20**, and the quick opening of side members **108**, truss **20** is transversely moved to inspection table **306**. Multiple rollers **308** in spaced groups throughout table **306** is tiltable downwardly to accommodate other material handling equipment such as a forklift truck, not shown. Table **306** may also serve as a support for a group of trusses **20** awaiting delivery.

SUMMARY OF SOME OF THE OUTSTANDING ADVANTAGES

An all wood principal structural components **20** is available in many embodiments, each with all portions thereof glued together without any supplemental holding power being developed by any fasteners. Each component **20** carries comparatively greater loads than those ever carried before by previously available trusses that involved reliance on metal fasteners either solely or in combination with glue. Moreover, gluing of filler blocks and plywood gussets and haunches at the respective joints strengthens these joints and also favorably modifies the bending stresses and other stresses in adjacent chords, diagonals, and/or struts of the open area trusses. The selected glues and their application under controlled temperatures and pressures hold all parts firmly together to receive and to transmit the overall design loadings. The steps of manufacture, inclusive of the application of glue, are all undertaken by using apparatus which uniquely includes an overall layout wherein the product is moved transversely to its longitudinal and/or longest axis. Such an apparatus is therefore operated in a much smaller factory space in much less time, with much less possibility of disturbing the fabrication prior to the fixing of the glued joints.

I claim:

1. A press facility used in fabricating products requiring controlled assembly of planar orientated components to be bonded together under pressure, such as an all wood truss or joint, comprising:

(a) above and below adjustable supporting structures;

(b) upper and lower platens adjustably positioned by the above and below adjustable supporting structures to accommodate various products of respective different thicknesses leaving an initial clearance approximating the finite travel to occur upon compression of the product during an operation such as glue bonding;

(c) a powered toggle linkage means to move the upper and lower platens together by applying a compressive force only through a predetermined finite travel distance providing maximum thrust at the end of the finite travel; and

(d) adjustable length tension means arranged to be cleared during loading and unloading of the press facility to permit movement of a product transversely to its longitudinal axis and to be secured between the above and below supporting structures of the respective upper and lower platens to carry the reactive load during the compression of a product in the press facility.

2. A press facility, as claimed in claim **1**, wherein the upper and lower platen means are arranged in separable portions and made selectively adjustable with respect to their supporting structures of the press facility to be moved relative to one another to accommodate irregularities in a product to be compressed thereby assuring the finite compression stroke of the press facility will be distributed substantially evenly throughout such a product during bonding.

3. A press facility, as claimed in claim **1**, wherein the upper and lower platen means are arranged in separable portions and readily moved along their supporting structures to be located over and under joints of a product to be compressed during bonding.

4. A press facility, as claimed in claim **2**, wherein the upper and lower platen means are arranged in separable portions and readily moved along their supporting structures to be located over and under joints of a product to be compressed during bonding.

5. A press facility, as claimed in claim **4**, wherein the upper and lower platen means are secured to rollers which roll along their supporting structures.

6. A press facility, as claimed in claim **5**, wherein the platen means have heating means regulated to preselected temperature.

7. A press facility, as claimed in claim **6**, wherein the press facility is provided within an overall environmental means wherein a pre-selected temperature may be maintained.

8. A press facility, as claimed in claim **7**, wherein a product layout means of the press facility is positioned adjacent the platen means.

9. A press facility, as claimed in claim **8**, wherein the product layout means of the press facility has a transfer means to move a pre-assembled product for its entry between the upper and lower platens.

10. A press facility, as claimed in claim **9**, wherein a product receiving means of the press facility is positioned adjacent the platen means.

11. A press facility, as claimed in claim **10**, wherein the product receiving means of the press facility has a tilting means used in loading the product on a delivery conveyance.

References Cited

UNITED STATES PATENTS

3,603,244	9/1971	Jureit	100—DIG. 13
1,749,545	3/1930	Pierce	100—286
295,159	3/184	Fitts et al.	10—286

DOUGLAS J. DRUMMOND, Primary Examiner

U.S. Cl. X.R.

100—93 D, 281, 286, DIG. 13