July 10, 1928.

1,676,460

J. S. REID

PULLEY STRUCTURE

Filed Sept. 7, 1926

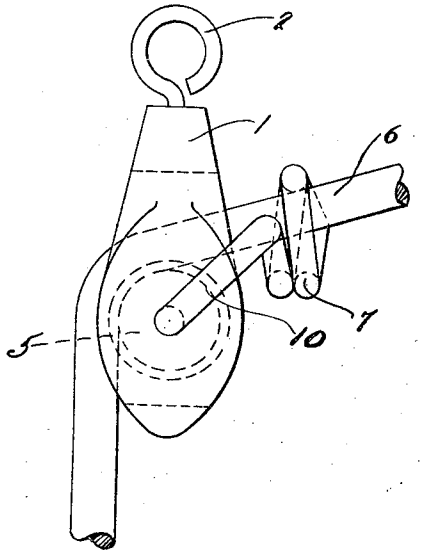

Fig. -1

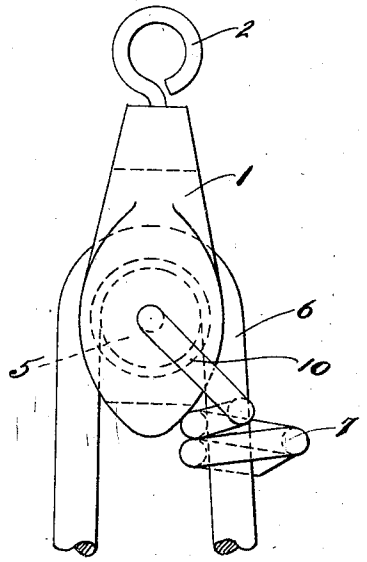

Fig. -2

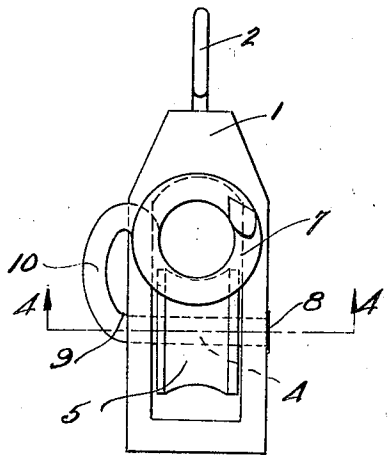

Fig -3

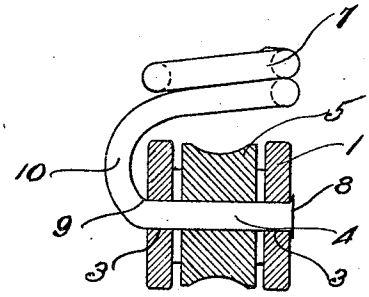

Fig -4

Inventor

James S. Reid

By Brockett & Hyde

Attorneys

Patented July 10, 1928.

1,676,460

UNITED STATES PATENT OFFICE.

JAMES S. REID, OF CLEVELAND, OHIO.

PULLEY STRUCTURE.

Application filed September 7, 1926. Serial No. 134,069.

This invention relates to improvements in pulley structures and has for its object the provision of an improved pulley structure in which the pivot for the pulley is provided with an integral extension formed as a guide for the rope or cord traveling over said pulley.

Further objects of the invention are in part obvious and in part will appear more in detail hereinafter.

Referring to the drawing, which represents one suitable embodiment of the invention, Fig. 1 is a side elevation of my improved pulley structure; Fig. 2 is a similar view with the rope guide in lowered position; Fig. 3 is a front elevation of the pulley structure with the rope removed; and Fig. 4 is a cross sectional view on the line 4—4, Fig. 3.

The pulley structure illustrated in the drawing is of the type commonly employed in connection with awnings and comprises a suitable frame or block 1 to the upper end portion of which is attached the usual swivel eye 2.

Said frame or block is provided with a pair of spaced, aligned openings 3 within which is rotatably mounted one end portion 4 of a wire rod. Upon this rod end portion 4 and between the frame openings 3 is rotatably mounted a suitable pulley 5, over the groove in which a rope or cord 6 is adapted to travel.

The other end portion of said wire rod is bent to form a closed eye 7, through which the rope 6 is adapted to pass, as clearly indicated in Figs. 1 and 2. Said eye not only guides the rope to the pulley groove, but when the pulley structure is used with an awning, said eye prevents the awning from being pulled into the frame or block 1 and caught between it and the pulley mounted therein.

The wire end portion 4, which constitutes the pivot for the pulley 5, is maintained in proper position within the frame openings 3 by flattening or beading over, as at 8, the extreme free end of said pivotal portion. Appreciable lateral movement of this pivotal portion in the other direction is prevented by the bend 9 which connects said portion with the intermediate rod portion 10, all as clearly indicated in Fig. 4 of the drawings.

From the foregoing, it will be noted that I have provided a pulley structure which is of extremely simple and inexpensive form, which comprises a minimum number of parts, and which is durable and efficient in use.

What I claim is:

1. In combination, a frame, a rod mounted in said frame, and a pulley rotatably mounted upon said rod, said rod being provided with an integral portion formed as a guide for the rope which travels over said pulley.

2. In combination, a frame, an integral rod having one of its end portions rotatably mounted in said frame, and a pulley rotatably mounted upon said rod end portion, the other end portion of said rod being formed as a guide for the rope traveling over said pulley.

3. In combination, a frame, an integral rod having one of its end portions rotatably mounted in said frame, and a pulley rotatably mounted upon said rod end portion, the other end portion of said rod being formed as an eye to receive and guide the rope traveling over said pulley.

4. In combination, a frame provided with a pair of spaced openings, a rod rotatably mounted in said frame openings, and a pulley rotatably mounted upon said rod between said frame openings, said rod being provided with an integral portion formed as a guide for the rope which is adapted to travel over said pulley.

5. In combination, a frame, an integral rod having a pulley receiving portion rotatably mounted in said frame, a pulley rotatably mounted upon said pulley receiving portion, said rod being also provided with a guiding portion for the rope travelling over said pulley, said guiding portion and said pulley receiving portion being connected by an intermediate portion of said rod, said intermediate portion being connected to one end of said pulley receiving portion by a bend which limits movement of said pulley receiving portion in one direction, and means at the other end of said pulley receiving portion for limiting movement of said portion in the other direction.

6. In combination, a frame, an integral rod having a pulley receiving portion rotatably mounted in said frame, a pulley rotatably mounted upon said pulley receiving portion, said rod being also provided with

a guiding portion for the rope travelling over said pulley, said guiding portion and said pulley receiving portion being connected by an intermediate portion of said rod, said intermediate portion being connected to one end of said pulley receiving portion by a bend which limits movement of said pulley receiving portion in one direction, the other end of said pulley receiving portion being flattened to limit movement of said pulley receiving portion in the other direction.

In testimony whereof I hereby affix my signature.

JAMES S. REID.