(12) INTERNATIONAL APPLICATION PUBLISHED UNDER THE PATENT COOPERATION TREATY (PCT)

(19) World Intellectual Property Organization
International Bureau

(43) International Publication Date
31 October 2019 (31.10.2019)

WIPO | PCT

(10) International Publication Number
WO 2019/205116 A1

(51) International Patent Classification:
G01K 11/12 (2006.01)

(21) International Application Number:
PCT/CN2018/085010

(22) International Filing Date:
28 April 2018 (28.04.2018)

(25) Filing Language: English

(26) Publication Language: English

(71) Applicant: **ABB SCHWEIZ AG** [CH/CH]; Brown Boveri Strasse 6, 5400 Baden (CH).

(72) Inventors; and

(71) Applicants *(for UG only)*: **SU, Cuicui** [CN/CN]; Room 403, Unit 6, Building No. 6, Huajiadi Beili Community, Chaoyang District, Beijing 100102 (CN). **LI, Nan** [CN/CN]; Room 1101, Unit 13, Building No. 22 , The 2nd Zone, Tiantongbeiyuan Community, Changping District, Beijing 102218 (CN). **CHEN, Jiansheng** [CN/CN]; Room 1603, Unit 3, Building No. 2, No. 1 Yuanyangyifang Community, Chaoyang District, Beijing 100024 (CN). **VILLARD, Romain** [FR/FR]; 7b, allée des Romarins, 69800 Saint-Priest (FR). **BARTHES, Karine** [FR/FR]; 49, rue Guy de Maupassant, 69500 Bron (FR). **DUMOUX, Jacques** [FR/FR]; 12, rue Georges Bizet, 69740 Genas (FR). **HAMOND, Christophe** [FR/FR]; 11, route du Mouchetier, 69510 Messmy (FR).

(74) Agent: **BOSS & YOUNG PATENT AND TRADEMARK LAW OFFICE**; Room 25A3-1, East Wing, Hanwei Plaza, No. 7 Guanghua Road, Chaoyang District, Beijing 100020 (CN).

(81) Designated States *(unless otherwise indicated, for every kind of national protection available)*: AE, AG, AL, AM, AO, AT, AU, AZ, BA, BB, BG, BH, BN, BR, BW, BY, BZ, CA, CH, CL, CN, CO, CR, CU, CZ, DE, DJ, DK, DM, DO, DZ, EC, EE, EG, ES, FI, GB, GD, GE, GH, GM, GT, HN, HR, HU, ID, IL, IN, IR, IS, JO, JP, KE, KG, KH, KN, KP, KR, KW, KZ, LA, LC, LK, LR, LS, LU, LY, MA, MD, ME, MG, MK, MN, MW, MX, MY, MZ, NA, NG, NI, NO, NZ, OM, PA, PE, PG, PH, PL, PT, QA, RO, RS, RU, RW, SA, SC, SD, SE, SG, SK, SL, SM, ST, SV, SY, TH, TJ, TM, TN, TR, TT, TZ, UA, UG, US, UZ, VC, VN, ZA, ZM, ZW.

(84) Designated States *(unless otherwise indicated, for every kind of regional protection available)*: ARIPO (BW, GH, GM, KE, LR, LS, MW, MZ, NA, RW, SD, SL, ST, SZ, TZ, UG, ZM, ZW), Eurasian (AM, AZ, BY, KG, KZ, RU, TJ, TM), European (AL, AT, BE, BG, CH, CY, CZ, DE, DK, EE, ES, FI, FR, GB, GR, HR, HU, IE, IS, IT, LT, LU, LV, MC, MK, MT, NL, NO, PL, PT, RO, RS, SE, SI, SK, SM,

(54) Title: TERMINAL BLOCK

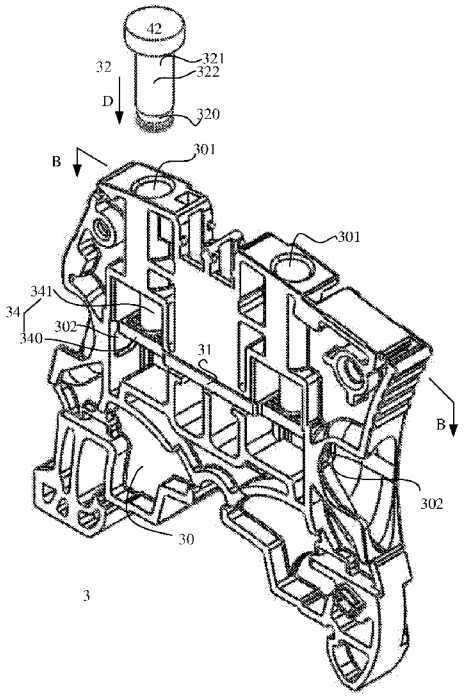

Figure 3A

(57) Abstract: It is therefore an objective of the invention to provide a terminal block including: an insulating body with a duct and at least one hole formed through a wall of the insulating body, a conductive linking bar in the insulating body for connecting at least one wire respectively passing through the at least one hole, a temperature probe received by the duct and made of transparent and insulating material having a first end and a second end, and a discoloration layer arranged at the first end of the temperature probe having at least a thermochroic layer. At least a portion of the temperature probe is arranged to pass through the duct towards the conductive linking bar so that the discoloration layer at the first end of the temperature probe is closer to the conductive linking bar than the second end of the temperature probe. By having such configuration, the discoloration layer will be heated rapidly thereby in the event of the bar overheating to provide a rapid colour change indicating a fault condition. This makes it more sensitive to the temperature of the conductive linking bar. Besides, the lights reflecting the colour change of the discoloration layer will propagate to the external of the insulating body through the optical path provided by the transparent temperature probe and arrives at the second end portion of the probe, which makes it visible to the eyes of the observer from an external point of view. This allows the image of discoloration layer to be viewed by the observer perceiving a fault occurring.

WO 2019/205116 A1

[Continued on next page]

TR), OAPI (BF, BJ, CF, CG, CI, CM, GA, GN, GQ, GW, KM, ML, MR, NE, SN, TD, TG).

Published:

— *with international search report (Art. 21(3))*

TERMINAL BLOCK

Technical Field

The invention relates to terminal blocks, and more particularly to the terminal blocks being able to indicate an overheat condition to an observer.

Background Art

In a terminal block, electrical contacts are typically made between its conductive linking bar and at least two electrical conductors by screw fastening means. If the electrical contacts between these contact parts are unsatisfactory, for example, if insufficient contact pressure is provided between the parts, arcing may occur, which leads to overheating of the terminal block, which, if undetected, may prove dangerous, possibly leading to the terminal block catching fire.

Patent KR 1 698 569 B1 discloses a terminal block in which a thermal conductive path is established for conducting heat originated in a conductive linking bar, through a metallic contact terminal of colour change unit, to an insulating cap formed on upper end of the contact terminal and then to a discoloration unit arranged on the insulating cap, and thus the discoloration unit will change colour indicating overheat condition to an observer.

However, there are technical problems with the terminal block. Since the material of the insulating cap normally exhibits higher thermal resistivity than that of the metallic contact terminal, it will provide a thermal insulation between the metallic contact terminal and the discoloration unit. This may mean that in certain operating conditions the internal electrical contacts may seriously overheat before the external discoloration unit reaches a sufficiently high temperature to change colour. Besides, the discoloration unit may be exposed to an unfriendly environment having high probability of mechanical damages, which causes deterioration of the discoloration unit.

Brief Summary of the Invention

It is therefore an objective of the invention to provide a terminal block including: an insulating body with a duct and at least one hole formed through a wall of the insulating body, a conductive linking bar in the insulating body for connecting at least one wire respectively passing through the at least one hole, a temperature probe received by the duct and made of transparent and insulating material having a first end and a second end, and a discoloration layer arranged at the first end of the temperature probe having at least a thermochroic layer. At least a portion of the temperature probe is arranged to pass through the duct towards the conductive linking bar so that the discoloration layer at the first end of the temperature probe is closer to the conductive linking bar than the second end of the temperature probe.

By having such configuration, the discoloration layer will be heated rapidly thereby in the event of the bar overheating to provide a rapid colour change indicating a fault condition. This makes it more sensitive to the temperature of the conductive linking bar. Besides, the lights reflecting the colour change of the discoloration layer will propagate to the external of the insulating body through the optical path provided by the transparent temperature probe and arrives at the second end portion of the probe, which makes it visible to the eyes of the

observer from an external point of view. This allows the image of discoloration layer to be viewed by the observer perceiving a fault occurring.

Preferably, the terminal block further includes a screw connection terminal arranged in the insulating body, being configured to fasten one of the wires passing through one of the holes to the conductive linking bar. The screw connection terminal includes a screw with rotational axis in a longitudinal direction of the duct. The duct includes a first portion, a second portion, and an inward protrusion between its first portion and the second portion, wherein the first portion is closer to the conductive linking bar than the second portion. A head of the screw is arranged to pass through the first portion of the duct and is obstructed by the inward protrusion of the duct to further pass into the second portion of the duct. The temperature probe includes a recess portion between its first end and second end, being configured to mate with the inward protrusion of the duct preventing relative movement of the duct and the temperature probe. The recess portion has a form that complements the inward protrusion of the duct, so that the latter can be retained in the former where the temperature probe is inserted in the duct. Thus, the discoloration layer at one end of the temperature probe is put in thermal contact via the screw connection terminal within the terminal block. The screw connection terminal is made of metal exhibiting a relatively low thermal resistance. Thus, the discoloration layer will be heated rapidly thereby in the event of the bar overheating to provide a rapid colour change indicating a fault condition. This makes it more sensitive to the temperature of the conductive linking bar.

Preferably, in a state of fastening the wire to the conductive linking bar, the discoloration layer at the first end of the temperature probe is in contact with the head of the screw of the screw connection terminal with the mating of the inward protrusion of the duct and the recess portion of the temperature probe. In such state, the head of the screw and the first end of the temperature probe are disposed in space defined by the first portion of the duct, and the second end is placed in the space defined by the second portion of the duct. These arrangements provide a way of use of the inward protrusion of the duct both for preventing the screw from being detached from the terminal block and obtaining an improved retaining effect for the temperature probe.

Preferably, the discoloration layer at the first end of the temperature probe is arranged in contact with the conductive linking bar. By having such configuration, the discoloration layer at one end of the temperature probe is put in direct contact with the conductive linking bar within the terminal block, and will be heated rapidly thereby in the event of the bar overheating to provide a rapid colour change indicating a fault condition. This makes it more sensitive to the temperature of the conductive linking bar.

Preferably, the conductive linking bar includes an opening facing the duct, and the temperature probe further includes a protrusion extending from its first end being arranged inserted into the opening of the conductive linking bar pressing against internal side of the opening. This makes it possible for securing the appropriate position between the bar and the probe and the discoloration layer can be covered by the temperature probe protecting external mechanical damages.

Preferably, the temperature probe further includes a head arranged at its second end being shaped in a lens magnifying an image of the thermochromic layer at its first end. The color change of the discoloration layer will be visible with magnifying effect by an observer through the transparent head so as to raise his alert the fact that the terminal block is internally overheating.

Preferably, the head of the temperature probe is arranged outside of the duct of the insulating body.

Preferably, material of the thermochromic layer is selected from thermochromic paint, ink, tape, film, label or a combination

Preferably, the transparent and insulating material of the temperature probe is selected from transparent thermoplastics (polycarbonate, polyamide, polymethylmethacrylate, ABS, rubbers, glasses and ceramics.

Preferably, the discoloration layer further includes a background layer on the thermochromic layer

Brief Description of the Drawings

The subject matter of the invention will be explained in more detail in the following text with reference to preferred exemplary embodiments which are illustrated in the drawings, in which:

Figures 1A and 1B respectively illustrate a perspective view and a sectional view along plane A-A of a terminal block according to a first embodiment of present invention;

Figures 2A and Figure 2B respectively illustrate the temperature probe and its assembly with the duct of the insulating body according to the first embodiment;

Figures 3A and 3B illustrate a perspective view and a sectional view along plane B-B of a terminal block according to a second embodiment of present invention; and

Figures 4A respectively illustrate an explosion view and a sectional view of the second embodiment of the temperature probe; and Figure 4B illustrates its assembly with the duct of the insulating body.

The reference symbols used in the drawings, and their meanings, are listed in summary form in the list of reference symbols. In principle, identical parts are provided with the same reference symbols in the figures.

Preferred Embodiments of the Invention

While the invention is susceptible to various modifications and alternative forms, specific embodiments thereof are shown by way of example in the drawings and will herein be described in detail. It should be understood, however, that the drawings and detailed description thereto are not intended to limit the invention to the particular form disclosed, but on the contrary, the intention is to cover all modifications, equivalents, and alternatives falling within the spirit and scope of the present invention as defined by the appended claims. Note, the headings are for organizational purposes only and are not meant to be used to limit or interpret the description or claims. Furthermore, note that the word "may" is used throughout this application in a permissive sense (i.e., having the potential to, being able to), not a mandatory sense (i.e., must)." The term "include", and derivations thereof, mean "including, but not limited to". The term "connected" means "directly or indirectly connected", and the term "coupled" means "directly or indirectly connected".

Figures 1A and 1B respectively illustrate a perspective view and a sectional view along plane A-A of a terminal block according to a first embodiment of present invention;

As shown in figures 1A and 1B, the terminal block 1 includes an insulating body 10, a conductive linking bar 11, a temperature probe 12, and a discoloration layer 13 arranged on the temperature probe 12. The discoloration layer 13 includes at least a thermochroic layer.

In the embodiment, the insulating body 10 is made of an insulating material and designed to

be shaped like a case defining internal space by its wall. For example, the insulating body 10 is made of Polyamide (PA) material, which has a maximum withstand temperature close to 110 °C. When the temperature rises to 110 °C, especially to 130 °C, burning of terminal block will happen and thus complete product failure. So, the temperature range 110-130 °C is defined as one threshold temperature (color change transition temperature) range. For other types of terminal blocks, the threshold temperature can be determined using the same method. The wall of the insulating body 10 is suitable for separating the terminal block 1 from another identical or compatible electrical device when the two insulating bodies are mounted side-by-side. The insulating body 10 has at least one duct 101 formed though the wall of the insulating body 10. In this embodiment, there are two ducts 101, and the language hereafter exemplifies the embodiment by using one of the ducts to the left. The duct 101 is arranged to open out to the outsides of the insulating body 10 with cross-section in rectangular. The duct 101 can receive an accessory, for example a jumper for mechanical and electrical interconnection with an adjoining other terminal block. The same duct 101 can be reused for receive the temperature probe 12 for temperature monitoring of the terminal block 1, which will be described in detail thereafter.

In the embodiment, the insulating body 10 further includes two holes 102 formed through the wall of the insulating body 10, which can be used for respectively passing the wires to be connected to the conductive linking bar 11. The skilled person shall understand that the number of the holes 102 can be one or more, which depends on the observer's requirement of how many wires to be connected. For example, the duct 101 is arranged to be substantially perpendicular to the longitudinal direction of the hole 102.

In the embodiment, the shape of the conductive linking bar 11 is symmetrical about a transverse mid-plane which corresponds to that of the insulating body10, when the terminal block 1 has the conductive linking bar 11 positioned in the insulating body 10. The conductive linking bar 11 is shaped like a plane being symmetrical about the above-defined transverse mid-plane and being designed to be placed parallel to the wall with the duct 101 formed through. Inside of the insulating body 10, it provides support elements for fixing the conductive linking bar 11 so that its two ends respectively abut the internal rims of the two holes 102 and at least a portion of it abuts the internal rim of the duct 101. Thus, the wires can reach the ends of the conductive linking bar 11 passing through the two holes 102, which in turn, can be fastened to the latter by fastening means; besides, an appropriately-shaped temperature probe is allowed to pass through the duct 101 to be in direct contact with the conductive linking bar 11.

In the embodiment, the temperature probe 12 is configured to be at least partially received by the duct 101 of the insulating body 10 and be made of transparent and insulating material. The temperature probe 12 has a first end 120 and a second end 121 and a connecting portion 122 mechanically linking the first end 120 and the second end 121. For example, the longitudinal length from the first end 120 to the second end 121 of the temperature probe 12 is equal to or greater than the depth of the duct 101, and the transparent and insulating material can be selected from transparent thermoplastics (polycarbonate, polyamide, polymethylmethacrylate, ABS), rubbers, glasses and ceramics. In a state of assembly, the first end 120 and at least a part of the temperature probe 12 are arranged to pass through the duct towards the conductive linking bar 11 in a direction D so that the discoloration layer 13 on the first end 120 of the temperature probe 12 is closer to the conductive linking bar 11 than the second end 121 of the temperature probe 12. Preferably, the discoloration layer 13 at the first end 121 of the temperature probe 12 is arranged in direct contact with the conductive linking bar 11.

Thus, the discoloration layer at one end of the temperature probe is put in direct contact with

the conductive linking bar within the terminal block, and will be heated rapidly thereby in the event of the bar overheating to provide a rapid colour change indicating a fault condition. This makes it more sensitive to the temperature of the conductive linking bar. Besides, the reflected lights from the discoloration layer will propagate to the external of the insulating body through the optical path provided by the transparent temperature probe and arrives at the second end portion of the probe, which makes it visible to the eyes of the observer from an external point of view. This allows the image of discoloration layer to be viewed by the observer perceiving a fault occurring.

Figures 2A and Figure 2B respectively illustrate the temperature probe and its assembly with the duct of the insulating body according to the first embodiment. As shown figures 2A and 2B, the temperature probe 12 is shaped like a block having the first end 120 and the second end 121. The shape of the temperature probe 12 may be adapted to fit for the internal space of the duct 101. Preferably, the temperature probe 12 has a protrusion 123 extending from the first end 120 in the longitudinal direction of the probe. The conductive linking bar 11 includes an opening 110 facing the duct 101, being configured for insertion of the protrusion 123 extending from the first end 120 pressing against internal side of the opening. This makes it possible for securing the appropriate position between the bar and the probe and the discoloration layer can be covered by the temperature probe protecting external mechanical damages.

In the embodiment, the discoloration layer 13 is arranged in contact with the first end 120 of the temperature probe 12. For example, its thermochromic layer 130 can be sprayed/printed on the the first end 120 of the temperature probe 12. In order to accomplish the above objects, irreversible thermochromic materials, which change color at a defined temperature and remain unchanged when the temperature drops, are chosen to check the temperature history. In other embodiments, semi-reversible thermochromic materials, which change color at a defined temperature T1 and recover the original color when the temperature drops to T2 or when they meet water, may be also employed. As mentioned above, the designed threshold temperature for the example screw type terminal block is 110 or 130 ºC. Of course, the threshold temperature could be set at other values depending on the specific applications or the customer's needs.

The thermochromic layer 130 may be selected from thermochromic paint, ink, tape, film, label or a combination thereof. Preferably, TC coating composition may be applied to the substrate by any of a variety methods, for example, flow coating, dipping and spraying. The coating thickness may be in a range of tens to hundreds micrometers and can be set optionally according to selection of the coating method. Preferably, the thermochromic elements may be of any type, for example, pigments, dyes, semi-conductors and liquid crystal systems. The thermochromic materials are largely chosen because of their responses to different temperatures (threshold). These TC materials have a relatively wide threshold range and will differ in the time required to change color in response to a change in temperature.

Preferably, the discoloration layer 13 further includes a background layer 131 showing background colors or graphics can be applied on the thermochromic layer 130 of the discoloration layer 13 to provide a consistent basis for calibrating the color change. A base color or pattern is visible when the TC material changes to a clear, colorless or at least partially translucent state.

In the embodiment, In the embodiment, the temperature probe 12 further includes a head 22 arranged at its second end 121 being shaped in a lens magnifying an image of the thermochromic layer 13 appearing at its second end 121. For example, the head is made of transparent and insulating material, such as thermoplastics (polycarbonate, polyamide, polymethylmethacrylate, ABS, et al), rubbers, glasses and ceramics, for an easy observation

of the underlying color change. The color change of the discoloration layer will be visible with magnifying effect by an observer through the transparent head so as to raise his alert the fact that the terminal block is internally overheating. Given that the second end 121 of the temperature probe 12 has a relatively small exposed surface outside of the insulating body 10, a magnification lens or other special light transmission design will be adopted for an easier observation of the color change by human eyes from a long distance.

Figures 3A and 3B illustrate a perspective view and a sectional view along plane B-B of a terminal block according to a second embodiment of present invention

As shown in figures 3A and 3B, the terminal block 3 includes an insulating body 30, a conductive linking bar 31, a temperature probe 32, and a discoloration layer 33 arranged on the temperature probe 32.

In the embodiment, although the insulating body 30 and the conductive linking bar 31 are of the same as that in the first embodiment, another at least one duct 301 can be used for providing a path through which an operator can insert a tool of screwdriver type to fasten a fastening screw fixing the contact between the conductive linking bar 31 and a wire abutting an end of the conductive linking bar 31 passing through the hole 302. In this embodiment, there are two ducts 301, and the language hereafter exemplifies the embodiment by using one of the ducts to the left. The connection of the wire and the conductive linking bar 31 is provided by a screw connection terminal 34, for example by a clamp 340 driven by the screw 341, when the latter is driven rotation-wise by the screwdriver. The clamp 340 fastens the end of the conductive linking bar 31 against the wire. The duct 301 can be reused for receive the temperature probe 32 for temperature monitoring of the terminal block 3, which will be described in detail thereafter. In the embodiment, the insulating body 30 further includes two holes 302 formed through the wall of the insulating body 30, which can be used for respectively passing the wires to be connected to the conductive linking bar 31, which are the same as those in the first embodiment.

Thus, the wires can reach the ends of the conductive linking bar 31 passing through the two holes 302, which in turn, can be fastened to the latter by fastening means, for example the clamp 340 and the screw 341. Besides, an appropriately-shaped temperature probe 32 is allowed to pass through the duct 301 to be in direct thermal contact with the screw341 and thus in thermal contact with the conductive linking bar 31 via the screw 341 and the clamp 340.

In the embodiment, the shape of the conductive linking bar 31 is symmetrical about a transverse mid-plane which corresponds to that of the insulating body 30, when the terminal block 3 has the conductive linking bar 31 positioned in the insulating body 30. The conductive linking bar 31 is shaped like a plane being symmetrical about the above-defined transverse mid-plane and being designed to be placed parallel to the wall with the duct 301 formed through. Inside of the insulating body 30, it provides support elements for fixing the conductive linking bar 31 so that its two ends respectively abut the internal rims of the two holes 302 and at least a portion of it abuts the internal rim of the duct 301.

In the embodiment, the temperature probe 32 is configured to be at least partially received by the duct 301 of the insulating body 30 and be made of transparent and insulating material. The temperature probe 32 has a first end 320 and a second end 321 and a connecting portion 322 mechanically liking the first end 320 and the second end 321. For example, the longitudinal length from the first end 320 to the second end 321 of the temperature probe 32 is equal to or greater than the depth of the duct 301, and the transparent and insulating material can be selected from transparent thermoplastics (polycarbonate, polyamide, polymethylmethacrylate, ABS, rubbers, glasses and ceramics. In a state of assembly, the first end 320 and at least a part of the temperature probe 32 are arranged to pass through the duct

towards the conductive linking bar 31 in a direction D so that the discoloration layer 33 on the first end 321 of the temperature probe 32 is closer to the conductive linking bar 31 than the second end 320 of the temperature probe 32. Preferably, the discoloration layer 33 at the first end 321 of the temperature probe 32 is arranged in contact with the conductive linking bar 31.

Thus, the discoloration layer at one end of the temperature probe is put in thermal contact via the screw connection terminal within the terminal block. The screw connection terminal is made of metal exhibiting a relatively low thermal resistance. Thus, the discoloration layer will be heated rapidly thereby in the event of the bar overheating to provide a rapid colour change indicating a fault condition. This makes it more sensitive to the temperature of the conductive linking bar. Besides, the lights reflecting the colour change of the discoloration layer will propagate to the external of the insulating body through the optical path provided by the transparent temperature probe and arrives at the second end portion of the probe, which makes it visible to the eyes of the observer from an external point of view. This allows the image of discoloration layer to be viewed by the observer perceiving a fault occurring.

Figures 4A illustrates a side view of an embodiment of the temperature probe, and Figure 4B illustrates a sectional view along plane B-B of its assembly with the duct of the insulating body.

Figures 4A respectively illustrate an explosion view and a sectional view of the second embodiment of the temperature probe; and Figure 4B illustrates its assembly with the duct of the insulating body.

As shown figures 4A and 4B, the temperature probe 32 is shaped like a cylinder having the first end 320 and the second end 321. The shape of the temperature probe 32 may be adapted to fit for the internal space of the duct 301. The screw 341 of the screw connection terminal 34 has its rotation axis in the longitudinal direction of the duct 301. Preferably, along its longitudinal direction, the duct 301 includes a first portion 301a, a second portion 301b, and an inward protrusion 301c between its first portion 301a and the second portion 301b, and the first portion 301a is closer to the conductive linking bar 31 than the second portion 301b. When the screw 341 passes through the first portion 301a of the duct 301 in an opposite direction to the conductive linking bar 31, so that the screw 341 is not detachable from the terminal block 3, because the screw head will be obstructed by the inward protrusion 301c of the duct 301 to further pass into the second portion 301b of the duct 301, and the temperature probe 32 includes a recess portion 323 between its first end 320 and second end 321, being configured to mate with the inward protrusion 301c of the duct 301 preventing relative movement of the duct 301 and the temperature probe 32 in the longitudinal direction. For example, the inward protrusion 301c is designed to delimit a radius of the duct 301 smaller in size than that of the screw head for prevention of the detachment of the screw 341. The first portion 301a of the duct 301 has a radial section larger in size that that of the screw head, so that, it is within the space defined by the first portion 301a of the duct 301 that the screw 341 can be driven deeper or vice versa by the screw-driver. The temperature probe 32 has the recess portion 323 on its connecting portion 322 shaped in a circle coaxially with the longitudinal direction of the temperature probe 32. The recess portion 323 has a form that complements the inward protrusion 301c of the duct 301, so that the latter can be retained in the former where the temperature probe 32 is inserted in the duct 301.

Preferably, in a state of fastening the wire to the conductive linking bar 31, the discoloration layer 33 at the first end 320 of the temperature probe 32 is in direct contact with the head of the screw 341 of the screw connection terminal 34, and at the same time the inward protrusion 301c of the duct 301 mates with the recess portion 323 of the temperature probe 32. In such state, the head of the screw 341 and the first end 320 of the temperature probe

32 are disposed in space defined by the first portion 301a of the duct 301, and the second end 321 is placed in the space defined by the second portion 301b of the duct 301. These arrangements provide a way of use of the inward protrusion of the duct both for preventing the screw from being detached from the terminal block and obtaining an improved retaining effect for the temperature probe.

In the embodiment, the discoloration layer 33 is arranged in contact with the first end 320 of the temperature probe 32. For example, its thermochromic layer 330 can be sprayed/printed on the the first end 320 of the temperature probe 32. In order to accomplish the above objects, irreversible thermochromic materials, which change color at a defined temperature and remain unchanged when the temperature drops, are chosen to check the temperature history. In other embodiments, semi-reversible thermochromic materials, which change color at a defined temperature T1 and recover the original color when the temperature drops to T2 or when they meet water, may be also employed. As mentioned above, the designed threshold temperature for the example screw type terminal block is 110 or 130 ºC. Of course, the threshold temperature could be set at other values depending on the specific applications or the customer's needs.

The discoloration layer 33 may use the same material in the first embodiment.

Preferably, the discoloration layer 33 further includes a background layer 331 showing background colors or graphics can be applied on thethermochromic (TC) materials of the discoloration layer 33 to provide a consistent basis for calibrating the color change. A base color or pattern is visible when the TC material changes to a clear, colorless or at least partially translucent state.

In the embodiment, the temperature probe 32 further includes a head 42 arranged at its second end 321 being shaped in a lens magnifying an image of the discoloration layer 33 at its first end 320. For example, the head is made of transparent and insulating material, such as thermoplastics (polycarbonate, polyamide, polymethylmethacrylate, ABS, et al), rubbers, glasses and ceramics, for an easy observation of the underlying color change. The color change of the discoloration layer will be visible with magnifying effect by an observer through the transparent head so as to raise his alert the fact that the terminal block is internally overheating. Given that the second end 321 of the temperature probe 32 has a relatively small exposed surface outside of the insulating body 30, a magnification lens or other special light transmission design will be adopted for an easier observation of the color change by human eyes from a long distance.

Though the present invention has been described on the basis of some preferred embodiments, those skilled in the art should appreciate that those embodiments should by no way limit the scope of the present invention. Without departing from the spirit and concept of the present invention, any variations and modifications to the embodiments should be within the apprehension of those with ordinary knowledge and skills in the art, and therefore fall in the scope of the present invention which is defined by the accompanied claims.

CLAIMS

1. A terminal block, including:

   an insulating body (10, 30), having at least one duct (101, 301) and at least one hole (102, 302) formed through a wall of the insulating body (10, 30);

   a conductive linking bar (11, 31) arranged in the insulating body (10, 30), being adapted for connecting at least one wire respectively passing through the at least one hole (102, 302); and

   a temperature probe (12, 32) being configured to be received by the duct (101, 301) and made of transparent and insulating material, having a first end and a second end; and

   a discoloration layer (13, 33) arranged at the first end of the temperature probe (12, 32), including at least a thermochromic layer (130, 330);

   wherein:

   at least a portion of the temperature probe (12, 32) is arranged to pass through the duct (101, 301) towards the conductive linking bar (11, 31) so that the discoloration layer (13, 33) at the first end of the temperature probe (12, 32) is closer to the conductive linking bar (11, 31) than the second end of the temperature probe (12, 32).

2. The terminal block according to claim 1, further including:

   a screw connection terminal arranged in the insulating body (10, 30), being configured to fasten one of the wires passing through one of the holes (102, 302) to the conductive linking bar (11, 31);

   wherein:

   the screw connection terminal includes a screw with rotational axis in a longitudinal direction of the duct (101, 301);

   the duct (101, 301) includes a first portion, a second portion, and an inward protrusion between its first portion and the second portion, wherein the first portion is closer to the conductive linking bar (11, 31) than the second portion;

   a head (22, 42) of the screw is arranged to pass through the first portion of the duct (101, 301) and is obstructed by the inward protrusion of the duct (101, 301) to further pass into the second portion of the duct (101, 301); and

   the temperature probe (12, 32) includes a recess portion between its first end and second end, being configured to mate with the inward protrusion of the duct (101, 301) preventing relative movement of the duct (101, 301) and the temperature probe (12, 32).

3. The terminal block according to claim 2, wherein:

   in a state of fastening the wire to the conductive linking bar (11, 31), the discoloration layer (13, 33) at the first end of the temperature probe (12, 32) is in contact with the head (22, 42) of the screw of the screw connection terminal with the mating of the inward protrusion of the duct (101, 301) and the recess portion of the temperature probe (12, 32).

4. The terminal block according to claim 1, wherein:

   the discoloration layer (13, 33) at the first end of the temperature probe (12, 32) is arranged in contact with the conductive linking bar (11, 31).

5. The terminal block according to claim 4, wherein:

the conductive linking bar (11) includes an opening (110) facing the duct (101); and

the temperature probe (12) further includes a protrusion extending from its first end being arranged inserted into the opening (110) of the conductive linking bar (11) pressing against internal side of the opening (110).

6. The terminal block according to any of the preceding claims, wherein:

the duct (101, 301) is arranged to be substantially perpendicular to either of the one hole (102, 302).

7. The terminal block according any of the preceding claims 1 to 3, wherein:

the temperature probe (12, 32) further includes a head (22, 42) arranged at its second end being shaped in a lens magnifying an image of the thermochromic layer at its first end.

8. The terminal block according to claim 5, wherein:

the head (22, 42) of the temperature probe (12, 32) is arranged outside of the duct (101, 301) of the insulating body (10, 30).

9. The terminal block according to any of the preceding claims 1 to 3, wherein:

material of the thermochromic layer is selected from thermochromic paint, ink, tape, film, label or a combination

10. The terminal block according to any of the preceding claims 1 to 3, wherein:

the transparent and insulating material of the temperature probe (12, 32) is selected from transparent thermoplastics (polycarbonate, polyamide, polymethylmethacrylate, ABS, rubbers, glasses and ceramics.

11. The terminal block according to any of the preceding claims, where:

the discoloration layer (13, 33) further includes a background layer (131, 331) on the thermochromic layer (130, 330).

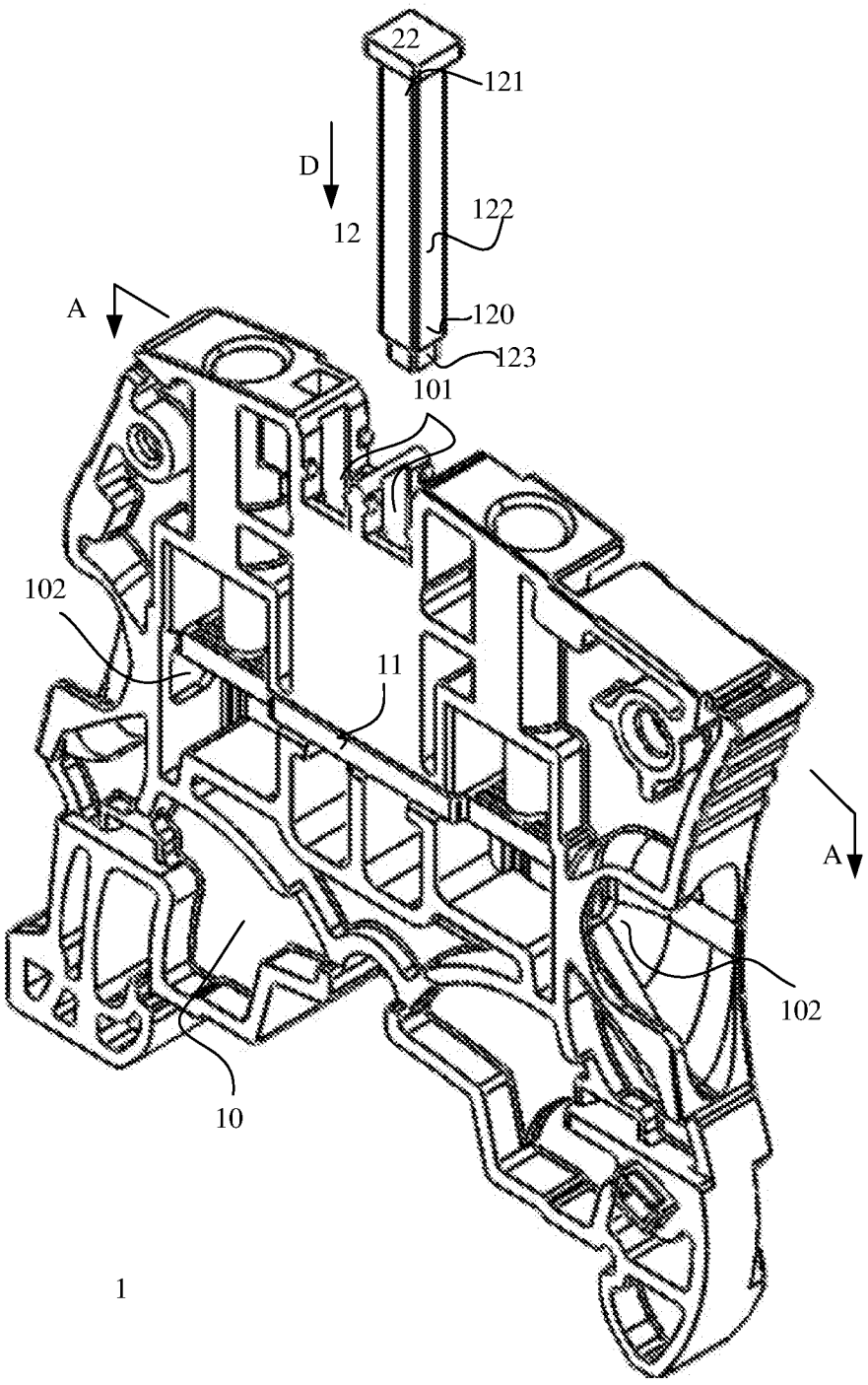

Figure 1A

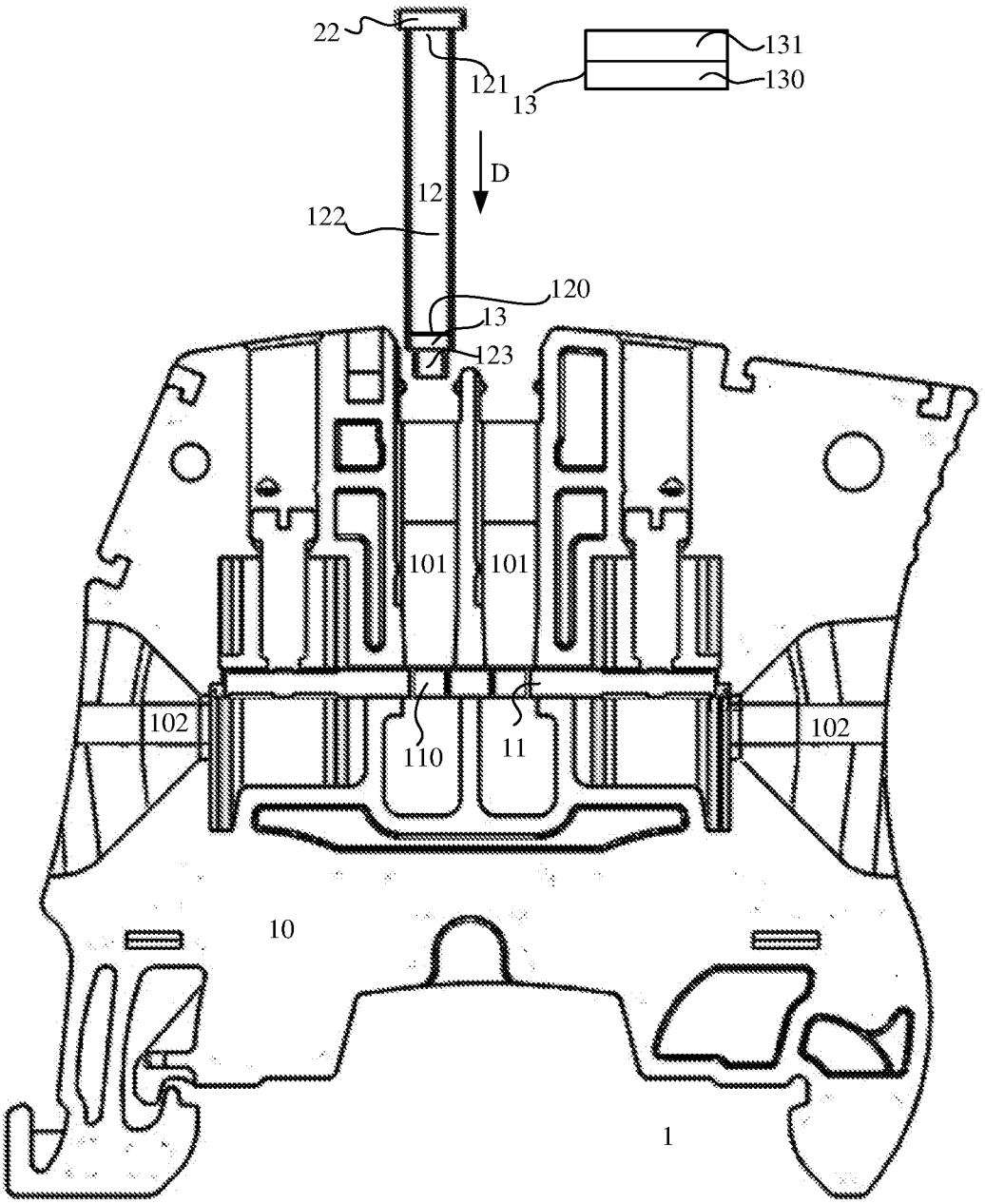

Figure 1B

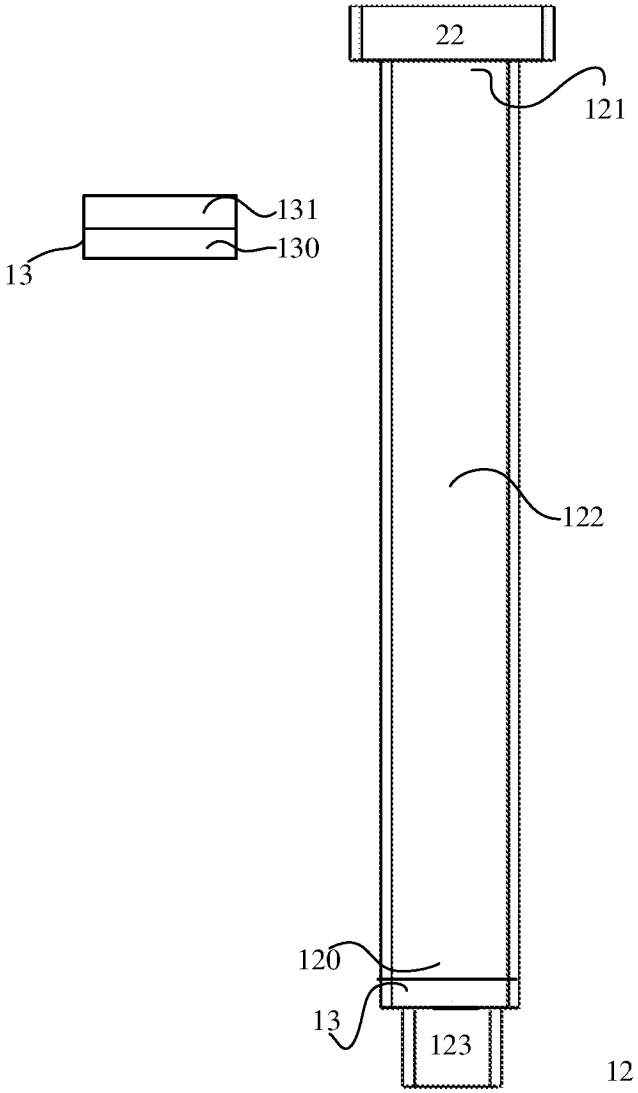

Figure 2A

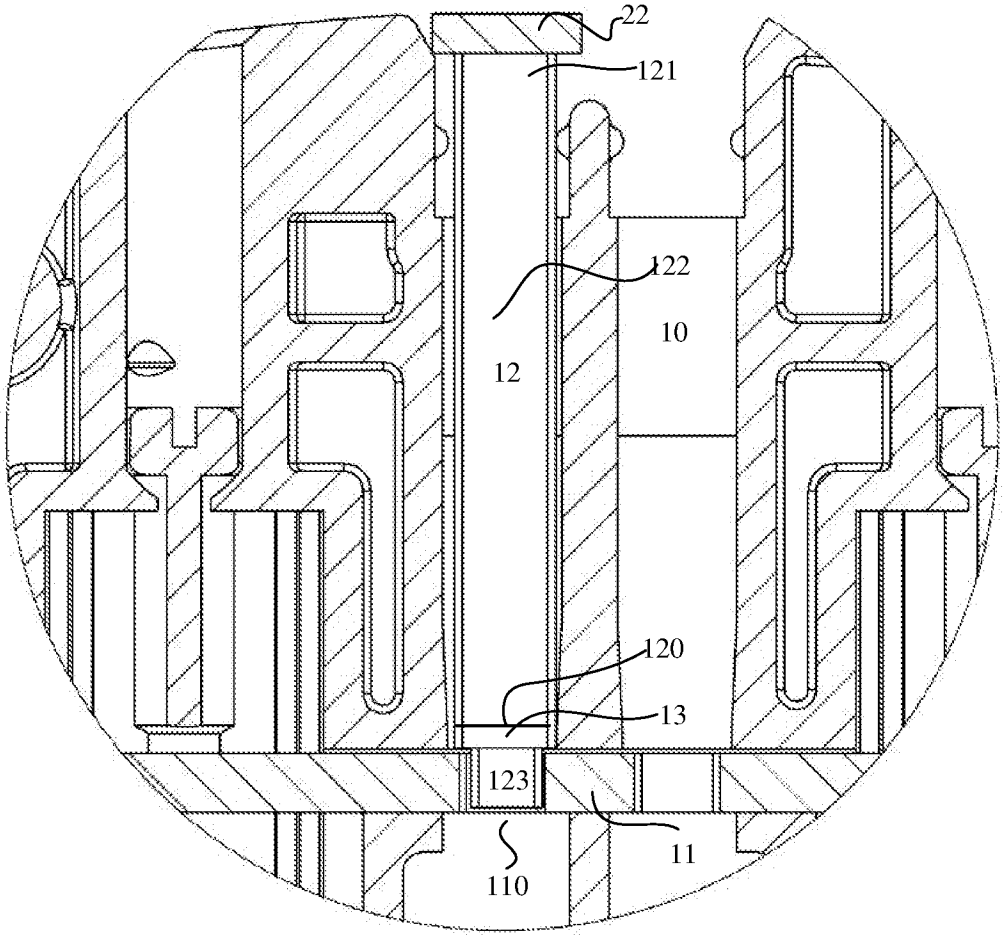

Figure 2B

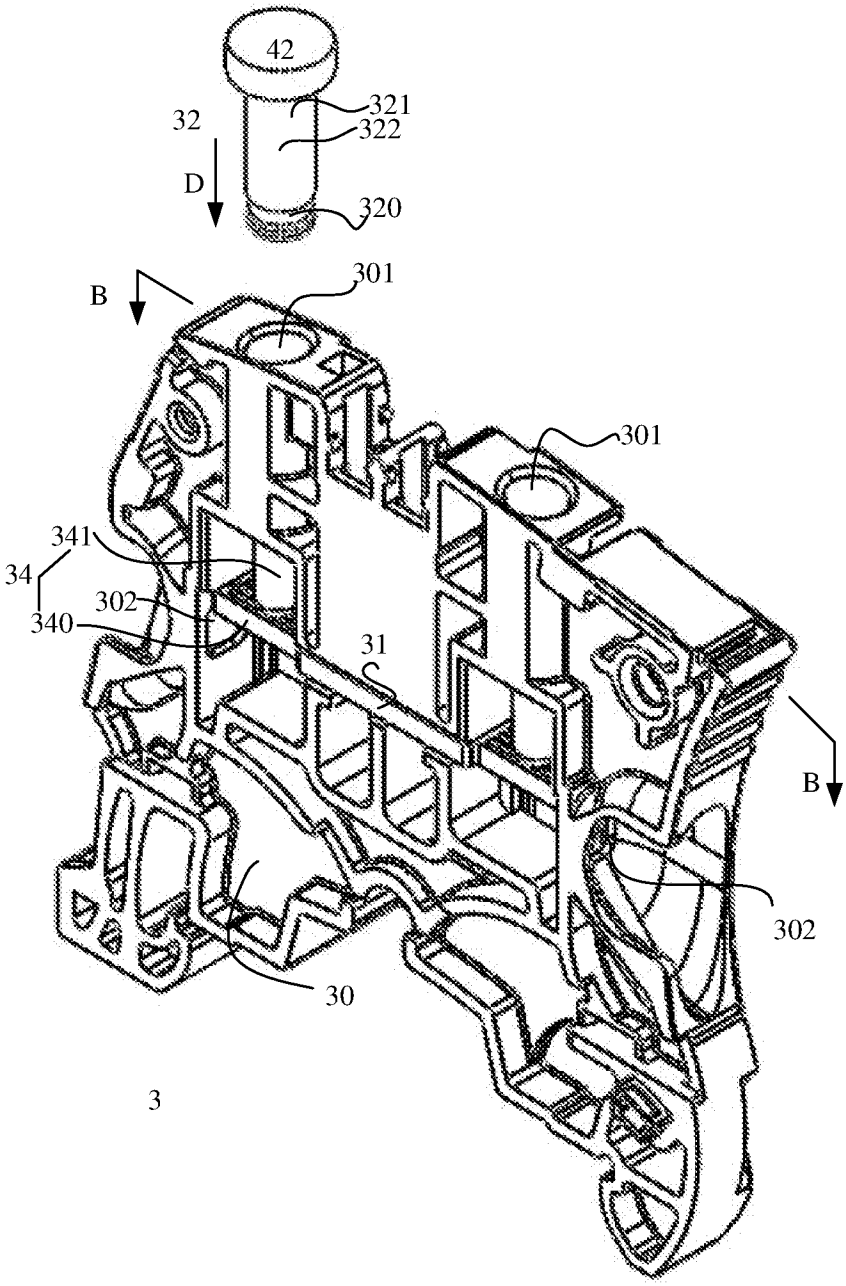

Figure 3A

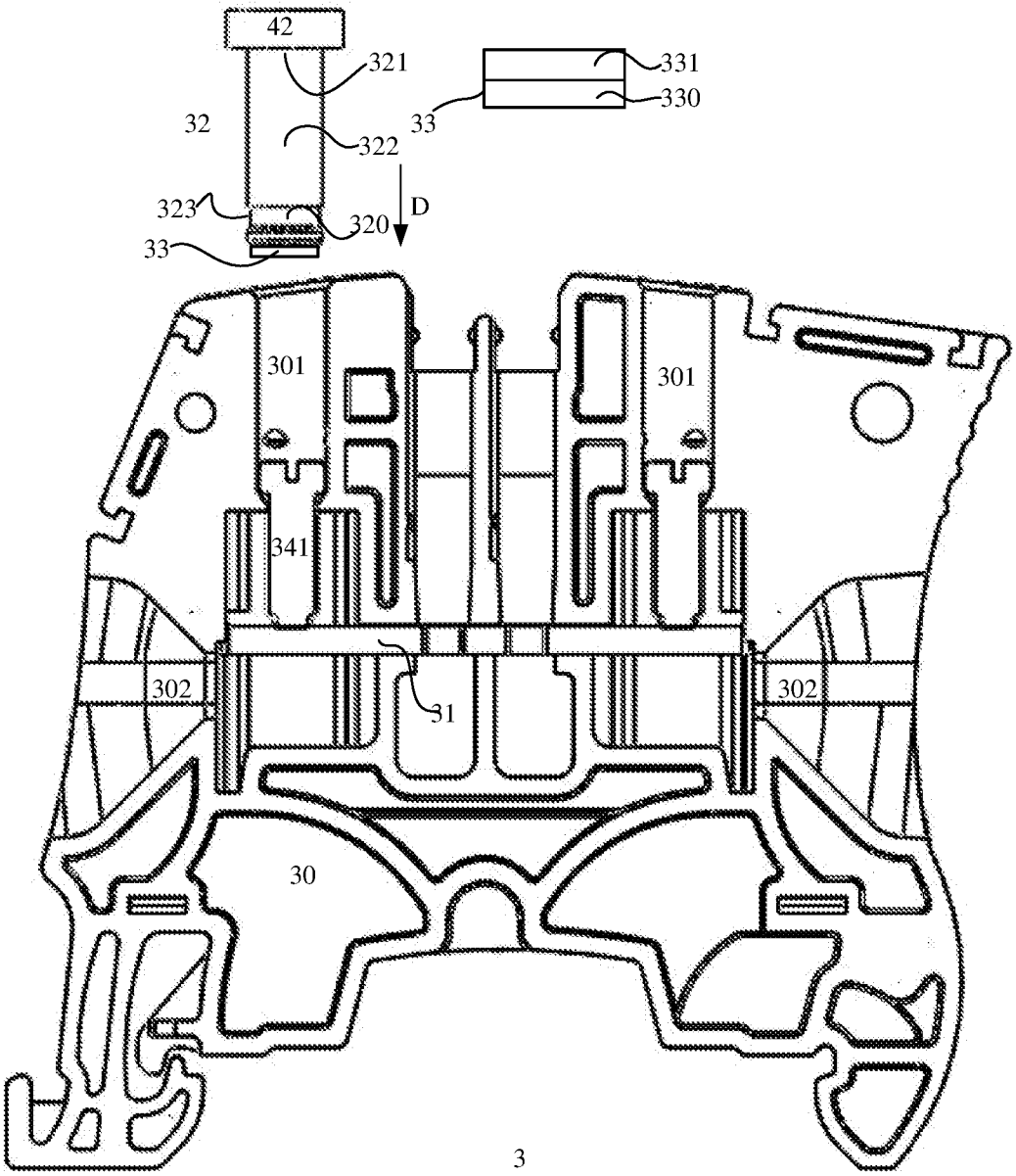

Figure 3B

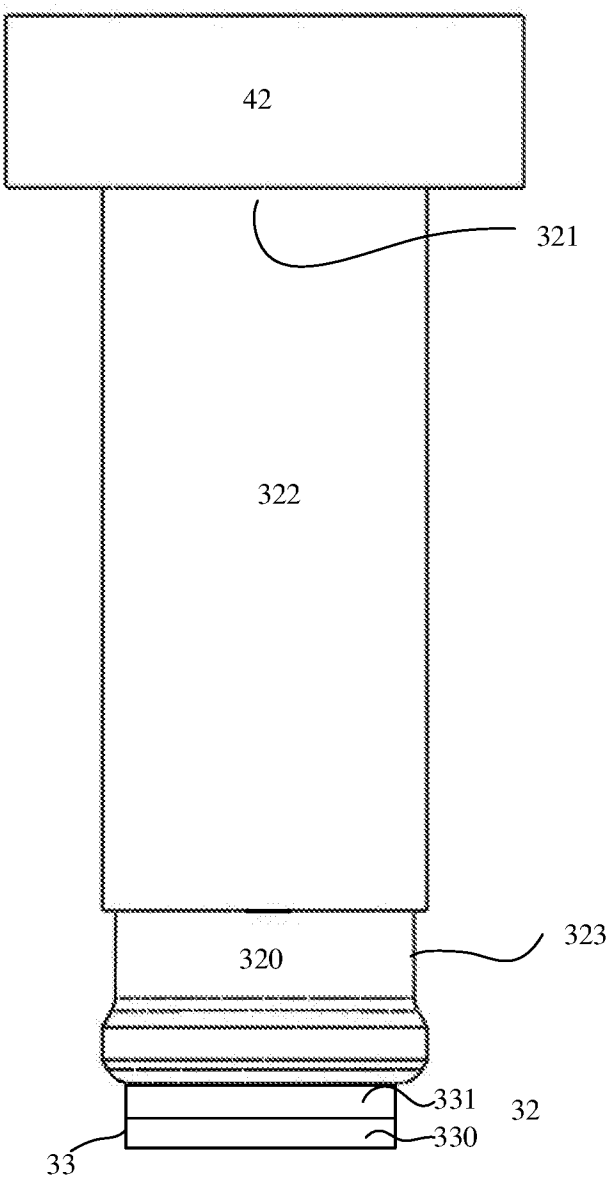

Figure 4A

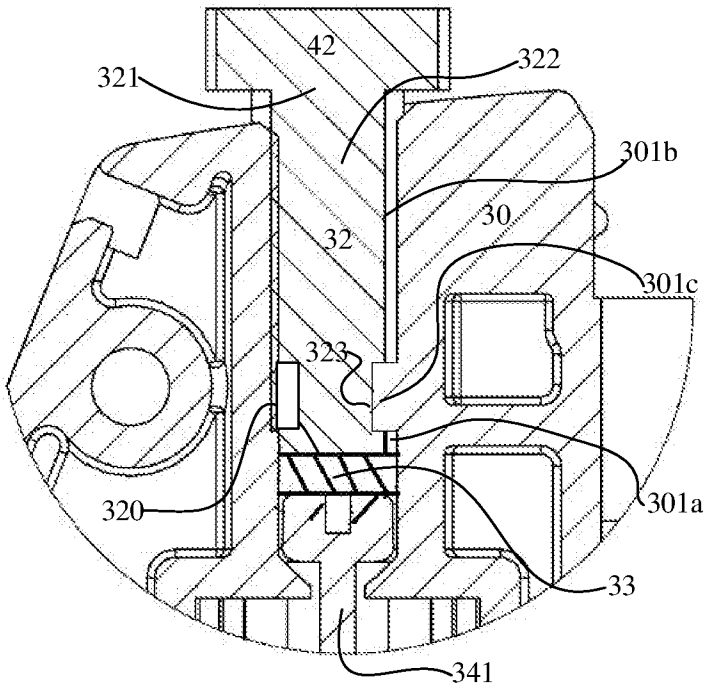

Figure 4B

INTERNATIONAL SEARCH REPORT

International application No.
PCT/CN2018/085010

A. CLASSIFICATION OF SUBJECT MATTER

G01K 11/12(2006.01)i

According to International Patent Classification (IPC) or to both national classification and IPC

B. FIELDS SEARCHED

Minimum documentation searched (classification system followed by classification symbols)

G01K; H01R

Documentation searched other than minimum documentation to the extent that such documents are included in the fields searched

Electronic data base consulted during the international search (name of data base and, where practicable, search terms used)

CNPAT,CNKI,WPI,EPODOC: heat+, overheat, hot+, temperature, thermo+, thermal+, probe?, discolo?r+, colo?r+, dye, paint, pigment, change, thermochromic+, thermo-chromic+, thermochromatic+, thermo chromatic+, transparen+, translucen+, opaque, insulat+, end

C. DOCUMENTS CONSIDERED TO BE RELEVANT

Category*	Citation of document, with indication, where appropriate, of the relevant passages	Relevant to claim No.
Y	KR 101698569 B1 (CHEONG HO SYSTEM CO., LTD.) 20 January 2017 (2017-01-20) description, paragraphs [0008]-[0031], claims 1-3, figures 1-4	1-11
Y	DE 19614112 A1 (MARTIN, RAHE) 16 October 1997 (1997-10-16) description, column 1, line 50 to column 2, line 26, column 3, line 1 to line 34, figures 2, 5, 8-14	1-11
Y	KR 20170120842 A (CHEONG HO SYSTEM CO., LTD.) 01 November 2017 (2017-11-01) description, paragraphs [0009]-[0041], claims 1-3, figures 1-5	1-11
A	CN 207197695 U (3M CHINA CO., LTD.) 06 April 2018 (2018-04-06) the whole document	1-11
A	CN 203258171 U (FUJIAN FUQUAN GROUP CO., LTD.) 30 October 2013 (2013-10-30) the whole document	1-11

☐ Further documents are listed in the continuation of Box C.

☑ See patent family annex.

* Special categories of cited documents:

"A" document defining the general state of the art which is not considered to be of particular relevance

"E" earlier application or patent but published on or after the international filing date

"L" document which may throw doubts on priority claim(s) or which is cited to establish the publication date of another citation or other special reason (as specified)

"O" document referring to an oral disclosure, use, exhibition or other means

"P" document published prior to the international filing date but later than the priority date claimed

"T" later document published after the international filing date or priority date and not in conflict with the application but cited to understand the principle or theory underlying the invention

"X" document of particular relevance; the claimed invention cannot be considered novel or cannot be considered to involve an inventive step when the document is taken alone

"Y" document of particular relevance; the claimed invention cannot be considered to involve an inventive step when the document is combined with one or more other such documents, such combination being obvious to a person skilled in the art

"&" document member of the same patent family

Date of the actual completion of the international search	Date of mailing of the international search report
28 December 2018	**30 January 2019**

Name and mailing address of the ISA/CN	Authorized officer
National Intellectual Property Administration, PRC **6, Xitucheng Rd., Jimen Bridge, Haidian District, Beijing** **100088** **China**	**LI,Wen**
Facsimile No. **(86-10)62019451**	Telephone No. **86-(10)-53961682**

INTERNATIONAL SEARCH REPORT
Information on patent family members

International application No.
PCT/CN2018/085010

Patent document cited in search report	Publication date (day/month/year)	Patent family member(s)	Publication date (day/month/year)
KR 101698569 B1	20 January 2017	KR 101764353 B1	02 August 2017
DE 19614112 A1	16 October 1997	None	
KR 20170120842 A	01 November 2017	None	
CN 207197695 U	06 April 2018	None	
CN 203258171 U	30 October 2013	None	