G. B. DUNBAR.

INTERNAL COMBUSTION AND LIQUID ACTUATED ENGINE.

APPLICATION FILED NOV. 29, 1911.

**1,068,634.**

**Patented July 29, 1913.**

2 SHEETS—SHEET 1.

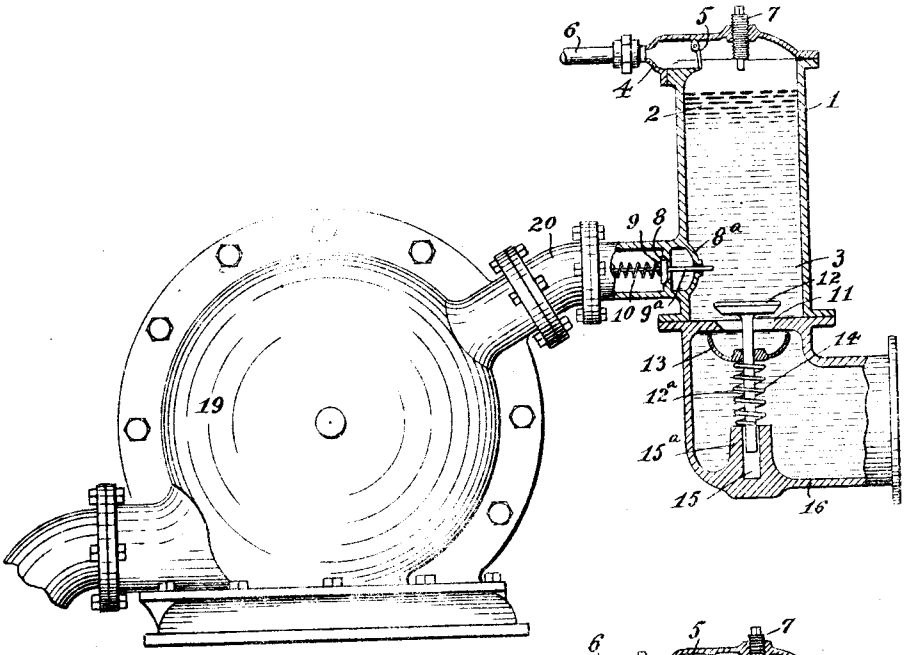


Fig. 1

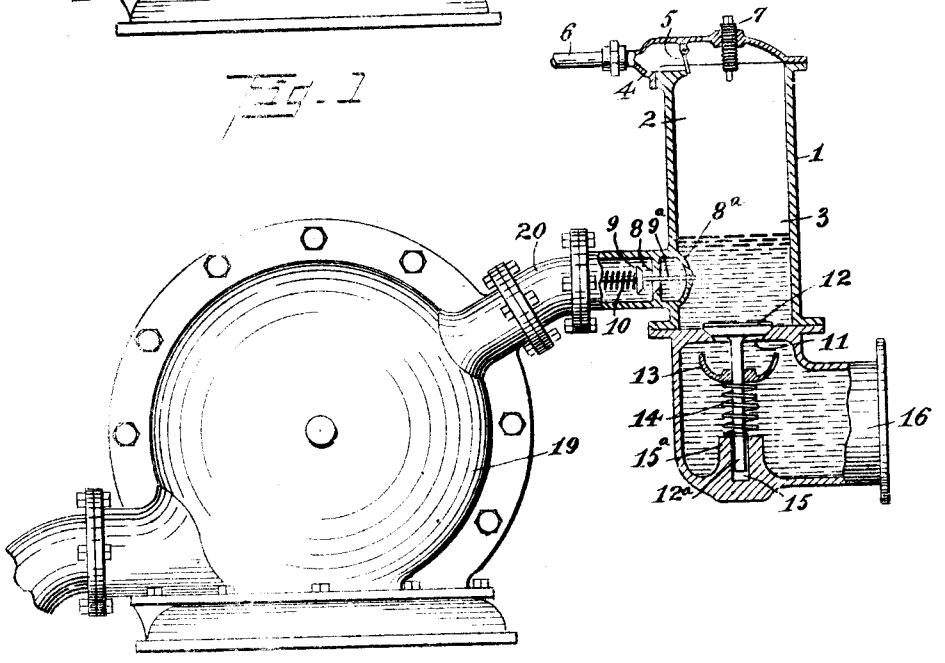


Fig. 2

Witnesses:
H. F. Griswold.
E. P. Schlosser.

Inventor
Geo. B. Dunbar
By Abel & Billman
Attorney

G. B. DUNBAR.

INTERNAL COMBUSTION AND LIQUID ACTUATED ENGINE.

APPLICATION FILED NOV. 29, 1911.

1,068,634. Patented July 29, 1913.

2 SHEETS—SHEET 2.

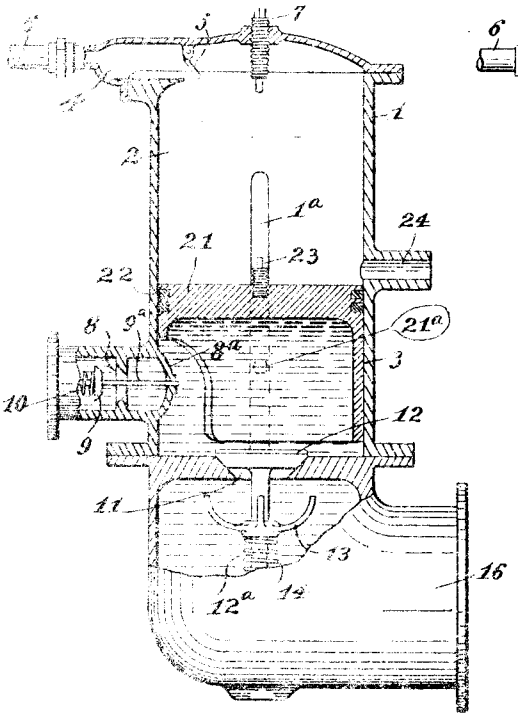

Fig. 3

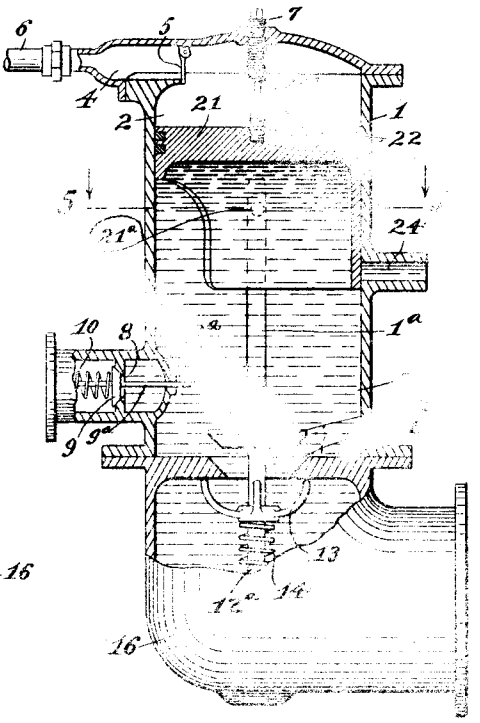

Fig. 4

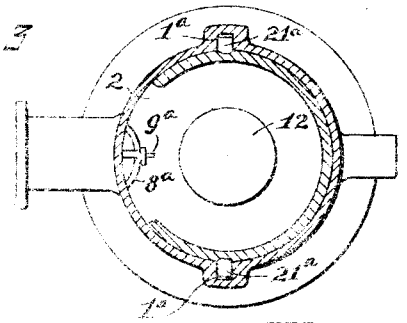

Fig. 5



Fig. 6

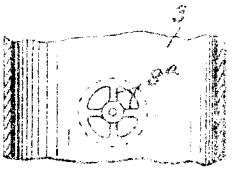

Fig. 7

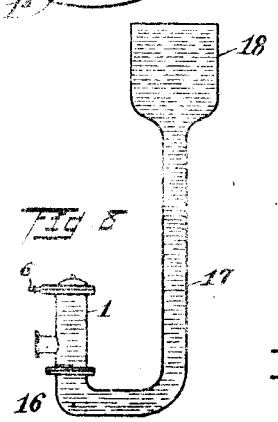

Fig. 8

Witnesses:

H. Griswold

E. P. Schlosser

Inventor

Geo. B. Dunbar

by Fred G. Billman

Attorney

# UNITED STATES PATENT OFFICE.

GEORGE BAKER DUNBAR, OF DETROIT, MICHIGAN.

## INTERNAL-COMBUSTION AND LIQUID-ACTUATED ENGINE.

1,068,634. Specification of Letters Patent. Patented July 29, 1913.

Application filed November 29, 1911. Serial No. 663,019.

*To all whom it may concern:*

Be it known that I, GEORGE B. DUNBAR, a citizen of the United States, residing at Detroit, in the county of Wayne and State of Michigan, have invented certain new and useful Improvements in Internal-Combustion and Liquid-Actuated Engines, of which the following is a specification.

My invention relates to improvements in internal combustion and liquid actuated engines, the primary object being to provide a combined internal combustion and liquid actuated engine, of exceedingly simple, cheap, and efficient construction.

A further object of the invention is to provide an engine or system for developing and applying power comprising an internal-combustion engine and a liquid-pressure engine, each designed to coöperate through mechanical means to drive a single machine.

With this end in view, the improved engine comprises a single working cylinder adapted to be alternately supplied with the coöperating combustible and liquid charges. The improved engine is particularly designed and adapted to work in conjunction with a body of liquid having a substantial head as in a hydraulic ram or the like.

With the above mentioned and other objects in view, the invention consists in the novel construction, arrangement and combination of parts, hereinafter described, illustrated in some of the embodiments in the accompanying drawings, and particularly pointed out in the appended claim.

Referring to the drawings forming a part of this specification, Figure 1, is a vertical sectional view of one form of my invention applied to a motor of the rotor or turbine type, the liquid and valves being shown in their position prior to the ignition of the combustible charge or working impulse of the engine. Fig. 2, a similar view showing the position of the parts at the end of the working impulse. Fig. 3, a view of a modified form of working cylinder provided with a piston and exhaust port, the piston being shown at the end of its stroke. Fig. 4, a similar view showing the position of the parts during the ignition of the compressed combustible charge. Fig. 5, a cross sectional view taken on line 5—5 of Fig. 4. Fig. 6, a top plan view of the spider stop member mounted on the stem of the liquid inlet valve for limiting the upward or opening movements of the latter. Fig. 7, a view of the inner side of the valved liquid outlet port communicating with the liquid chamber portion of the working cylinder. Fig. 8, a diagrammatic view showing the improved working cylinder connected to a pipe or reservoir containing a column and head of liquid.

Similar numerals of reference designate like parts throughout all the figures of the drawings.

The improved engine comprises a working cylinder 1, provided with a combustion chamber 2, and a liquid chamber 3. The cylinder 1, is mounted in a vertical position and is provided at one end of its top with a charge inlet port 4, communicating with the combustion chamber 2, and adapted to be opened and closed by means of a suitable valve 5. The charge inlet port 5, is adapted to receive the combustible mixture or charge through a suitable conduit pipe 6, communicating with the carbureter or source of hydrocarbon supply, said source of supply being provided with suitable means or mechanism (not shown) for causing the fuel charge to flow into the combustion chamber 2, at proper times during the operation of the engine.

The compressed combustible charge is adapted to be ignited through a spark plug 7, forming a part of any suitable and convenient system of electro-magnetic ignition and timing mechanism and upon the ignition of the combustible charge and during the working impulse a large portion of the liquid or operating fluid in the liquid chamber 3, is forced out through a liquid outlet port 8, communicating with the rotor or other device to be operated. The liquid outlet port 8, is adapted to be opened and closed by means of a valve 9, said valve preferably opening against the resistance of a spring 10, and, in the present instance, having a valve stem $9^a$, extending through and guided within an opening in spider members $8^a$, of the liquid outlet port. The liquid chamber 3, is adapted to be supplied with liquid after each working impulse through a liquid inlet port 11, and as a means for closing said inlet port during each working impulse and opening the same and resupplying the liquid chamber with a liquid charge in the act of compressing the explosive mixture in the combustion chamber, a valve 12, is provided, said valve being adapted to be stopped or limited in its upward or opening movement

by means of a spider stop member 13, mounted on the valve stem $12^a$, the latter being preferably surrounded by a spring 14, and operating in a guide opening 15, the spring 14, in the present instance, being interposed between the boss portion $15^a$, forming the guide opening 15, and the spider stop 13, whereby the valve 12, in its closing movement will operate against the resistance of said spring. The liquid chamber 3, is adapted to communicate with any suitable and convenient source of liquid supply, and the working cylinder, in the present instance, is secured to an elbow pipe 16, secured to or communicating with a connecting pipe, such for example,—as the connecting pipe 17, and reservoir or tank 18, containing a column and head of water as illustrated in Fig. 8, of the drawings.

The liquid outlet port 8, may communicate with a suitable rotor or turbine casing 19, through the medium of suitable connecting or conduit pipes 20, as shown in Figs. 1 and 2, of the drawings, it being obvious that by the provision of a second working cylinder and its connections such as above described, and suitably connecting the same at a suitable point in the rotor casing through a second conduit pipe, the rotor may be readily reversed as desired, and it is also obvious that by the provision of two of such working cylinders the same may be readily embodied as a double acting pump for pumping or raising columns of water from a common source of supply.

In the form or embodiment of my invention as shown in Figs. 1 and 2, the products of combustion or burned gases during each working impulse are adapted to be taken up by the liquid in the liquid chamber and forced out through the liquid outlet port 8, the fresh gases being adapted to pass in through the inlet port 4, and to be compressed through the next liquid charge entering through the liquid inlet port 11.

In the form or embodiment of my invention shown in Figs. 3, 4, and 5, a piston head 21, is mounted in the working cylinder, said piston head being provided with guide members $21^a$, adapted to reciprocate in diametrically opposite guide ways $1^a$, of the working cylinder, said piston head 21, being provided with piston rings 22, and carrying an electrode 23, adapted to coöperate with the spark plug 7, in forming a spark gap $23^a$, when the fuel charge has been compressed, as illustrated in Fig. 4, whereby said fuel charge is ignited.

As a means for providing for the escape of the exhaust gases, the combustion chamber is provided with an exhaust port 24, adapted to be opened and closed through the reciprocation of the piston head 21, as shown in Figs. 3, and 4, of the drawings.

From the foregoing description, taken in connection with the accompanying drawings, the operation and advantages of my invention will be readily understood.

Having thus described some of the embodiments of my invention, what I claim and desire to secure by Letters Patent is,—

An internal combustion and liquid actuated engine, comprising a working cylinder provided at one end with a combustible charge inlet port and valve and at the other with a liquid inlet port and valve, the latter being provided with a stop and a spring for holding said valve open, a liquid outlet port and valve, a source of liquid supply comprising a connecting pipe and a reservoir above said working cylinder, and means for igniting the combustible charge when the liquid reaches a predetermined height in said working cylinder.

In testimony whereof I have affixed my signature in presence of two witnesses.

GEORGE BAKER DUNBAR.

Witnesses:

MABEL M. SLOCUM,

CHAS. H. SLOCUM.