US 20050141691A1

(19) United States

(12) Patent Application Publication (10) Pub. No.: US 2005/0141691 A1

Wengrovitz (43) Pub. Date: Jun. 30, 2005

(54) METHOD FOR TRANSFERRING CALLS BETWEEN PBX TELEPHONE AND SIP CLIENT

(76) Inventor: **Michael S. Wengrovitz**, Concord, MA (US)

Correspondence Address:
ALCATEL INTERNETWORKING, INC.
ALCATEL-INTELLECTUAL PROPERTY DEPARTMENT
3400 W. PLANO PARKWAY, MS LEGL2
PLANO, TX 75075 (US)

(21) Appl. No.: **10/876,445**

(22) Filed: **Jun. 25, 2004**

Related U.S. Application Data

(63) Continuation of application No. 10/750,795, filed on Dec. 31, 2003.

Publication Classification

(51) **Int. Cl.**[7] **H04M 3/42**; H04M 1/64

(52) **U.S. Cl.** **379/211.02**; 379/212.01

(57) **ABSTRACT**

This invention integrates instant messaging, presence, and other collaborative capabilities with conventional PBX functionality through use of a PBX-Messaging Integration Client (PMIC). The invention in its several embodiments features a method and system for using the PMIC-based computer interface to perform off-hook/on-hook presence notification for a PBX phone, establish media sessions concurrent with PBX telephonic communication, execute custom call treatment in conjunction with a PBX phone, implement call transfer capability between a PBX phone and numerous other devices, and provide PBX call control. The PBX is generally enabled with computer telephony integration (CTI) and, depending on the embodiment, a Voice-over-Internet Protocol (VoIP) such as Session Initiation Protocol (SIP). The invention empowers enterprise workers with a diverse, unified and integrated set of both PBX functions and SIP-based collaboration tools.

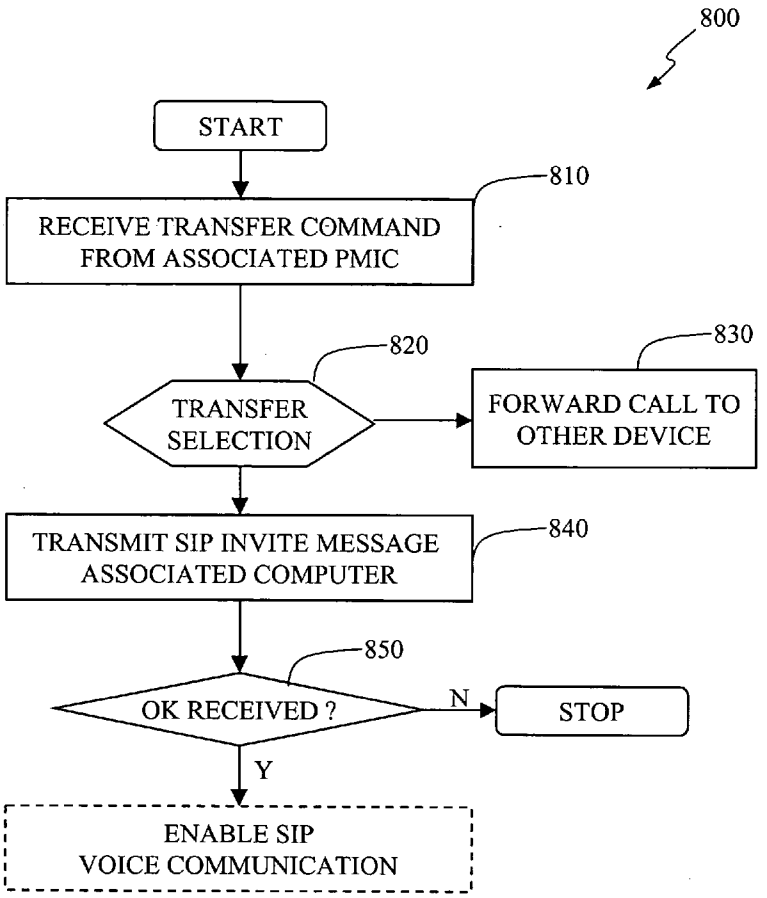

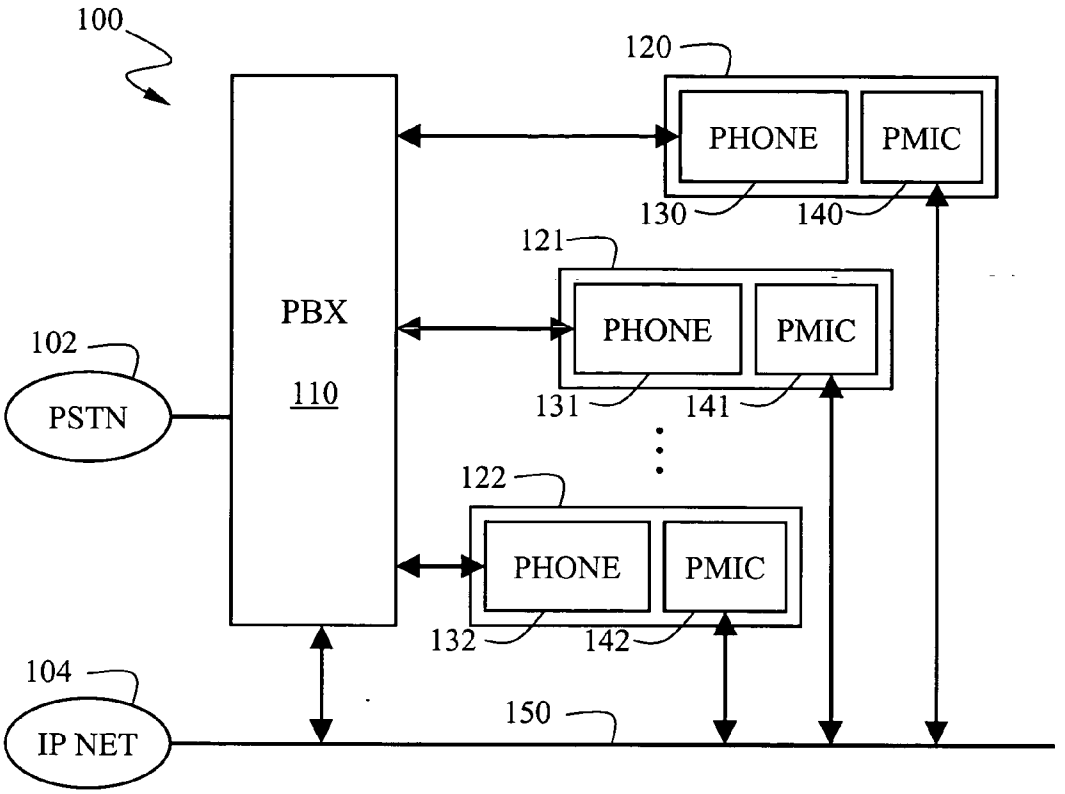
100
120
PHONE
PMIC
130
140
121
PBX
110
PHONE
PMIC
102
PSTN
131
141
122
PHONE
PMIC
132
142
104
IP NET
150

FIG. 1

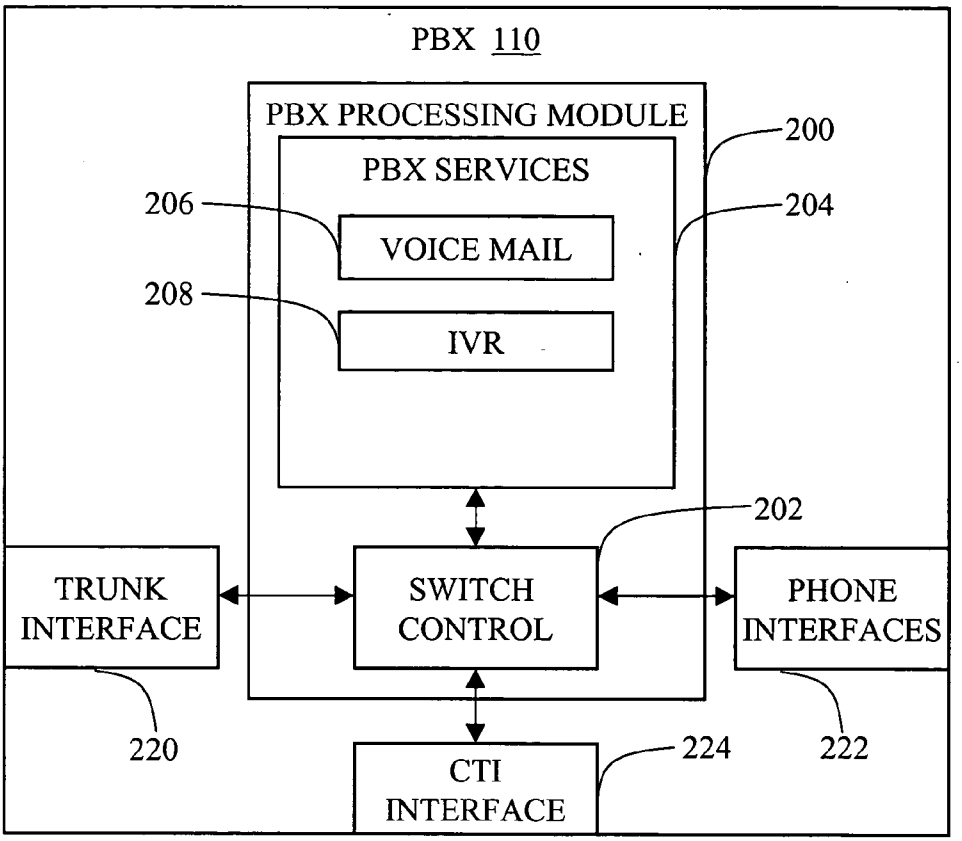
PBX 110
PBX PROCESSING MODULE
200
PBX SERVICES
206
204
VOICE MAIL
208
IVR
202
TRUNK INTERFACE
SWITCH CONTROL
PHONE INTERFACES
220
224
222
CTI INTERFACE

FIG. 2A

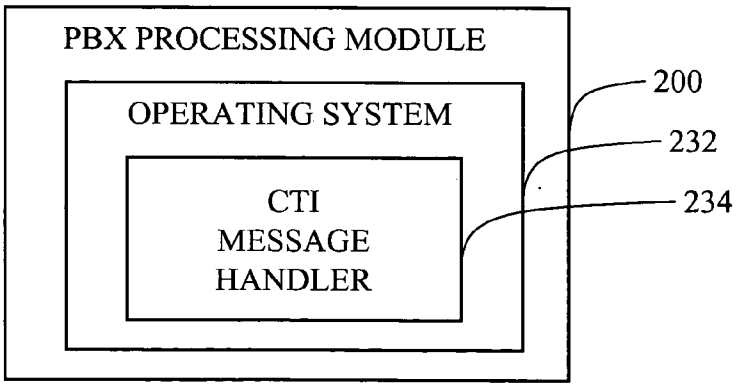
PBX PROCESSING MODULE
200
OPERATING SYSTEM
232
CTI MESSAGE HANDLER
234

FIG. 2B

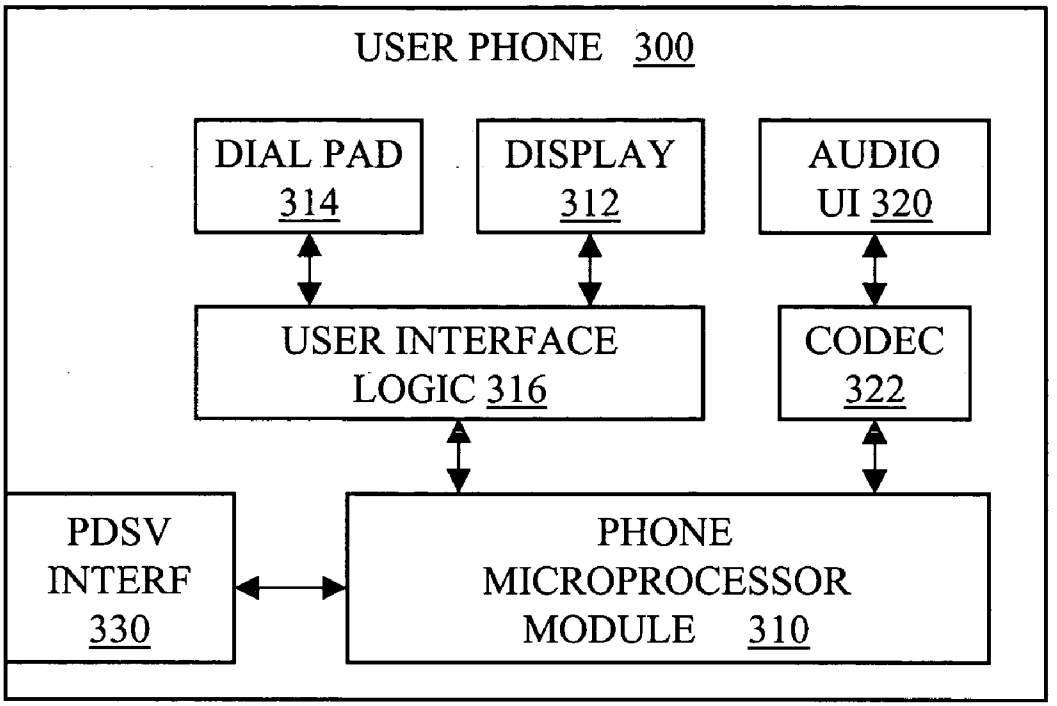
USER PHONE 300
DIAL PAD 314
DISPLAY 312
AUDIO UI 320
USER INTERFACE LOGIC 316
CODEC 322
PDSV INTERF 330
PHONE MICROPROCESSOR MODULE 310

FIG. 3

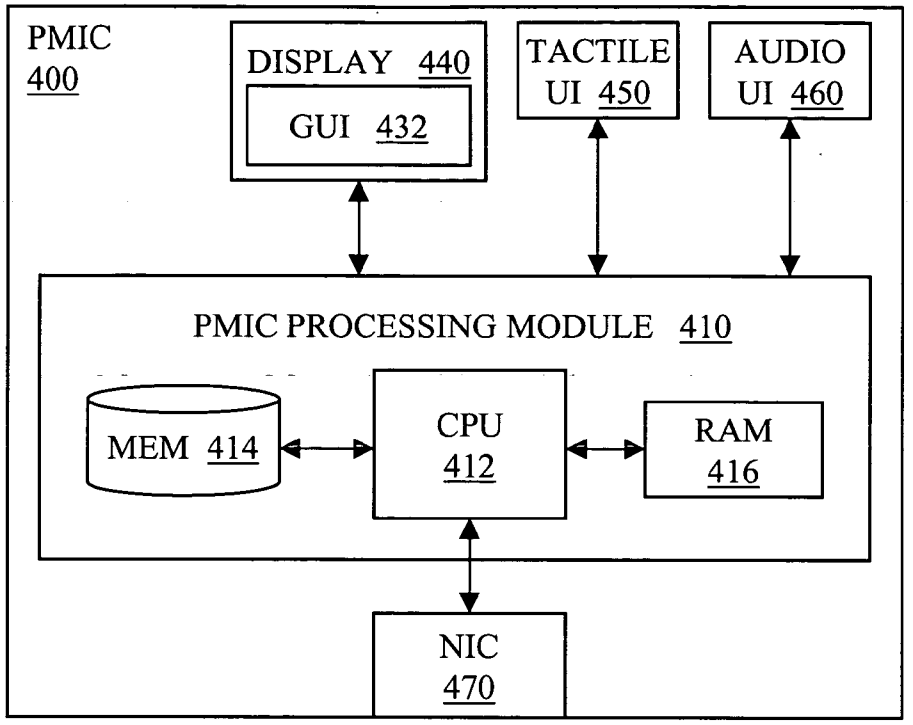
PMIC
400
DISPLAY 440
GUI 432
TACTILE
UI 450
AUDIO
UI 460
PMIC PROCESSING MODULE 410
MEM 414
CPU
412
RAM
416
NIC
470

FIG. 4A

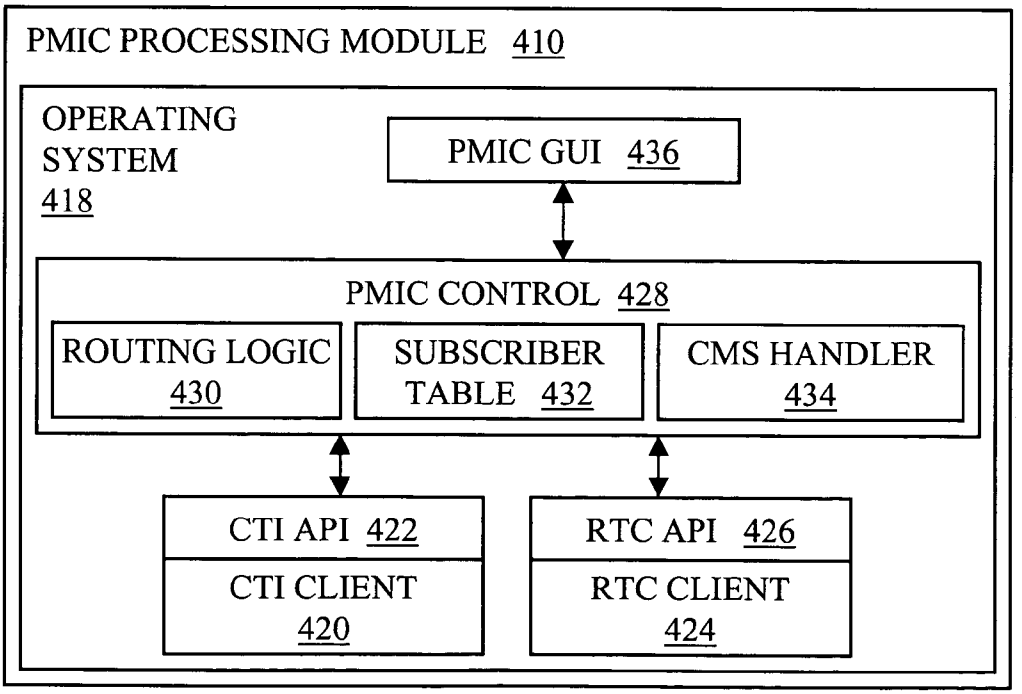
PMIC PROCESSING MODULE 410
OPERATING
SYSTEM
418
PMIC GUI 436
PMIC CONTROL 428
ROUTING LOGIC
430
SUBSCRIBER
TABLE 432
CMS HANDLER
434
CTI API 422
CTI CLIENT
420
RTC API 426
RTC CLIENT
424

FIG. 4B

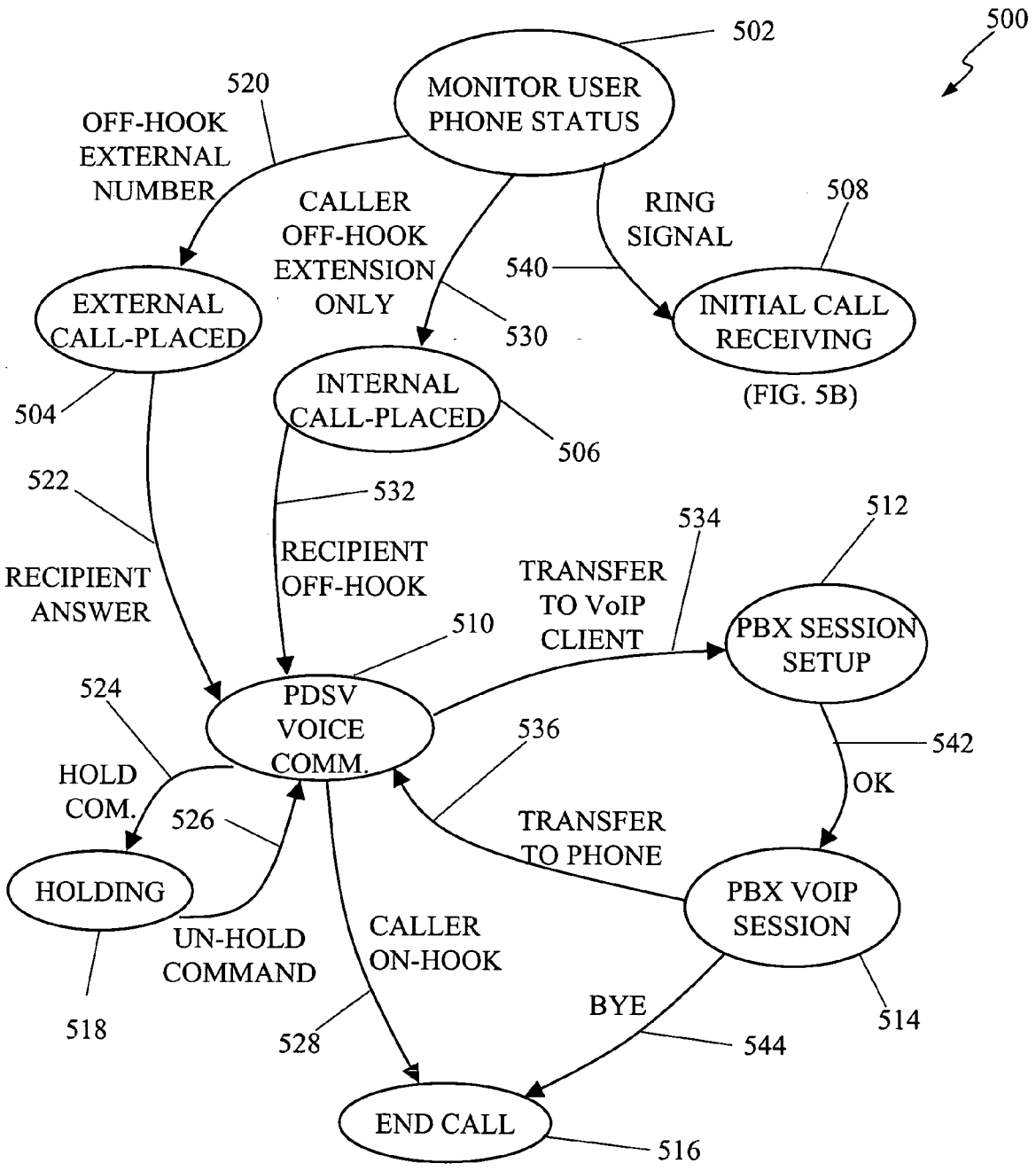
500
502
MONITOR USER PHONE STATUS
520
OFF-HOOK EXTERNAL NUMBER
CALLER OFF-HOOK EXTENSION ONLY
530
RING SIGNAL
508
540
EXTERNAL CALL-PLACED
INTERNAL CALL-PLACED
INITIAL CALL RECEIVING
(FIG. 5B)
504
506
522
532
RECIPIENT ANSWER
RECIPIENT OFF-HOOK
534
512
TRANSFER TO VoIP CLIENT
PBX SESSION SETUP
510
524
PDSV VOICE COMM.
536
542
OK
HOLD COM.
526
TRANSFER TO PHONE
HOLDING
PBX VOIP SESSION
UN-HOLD COMMAND
CALLER ON-HOOK
518
528
BYE
544
514
END CALL
516

FIG.5A

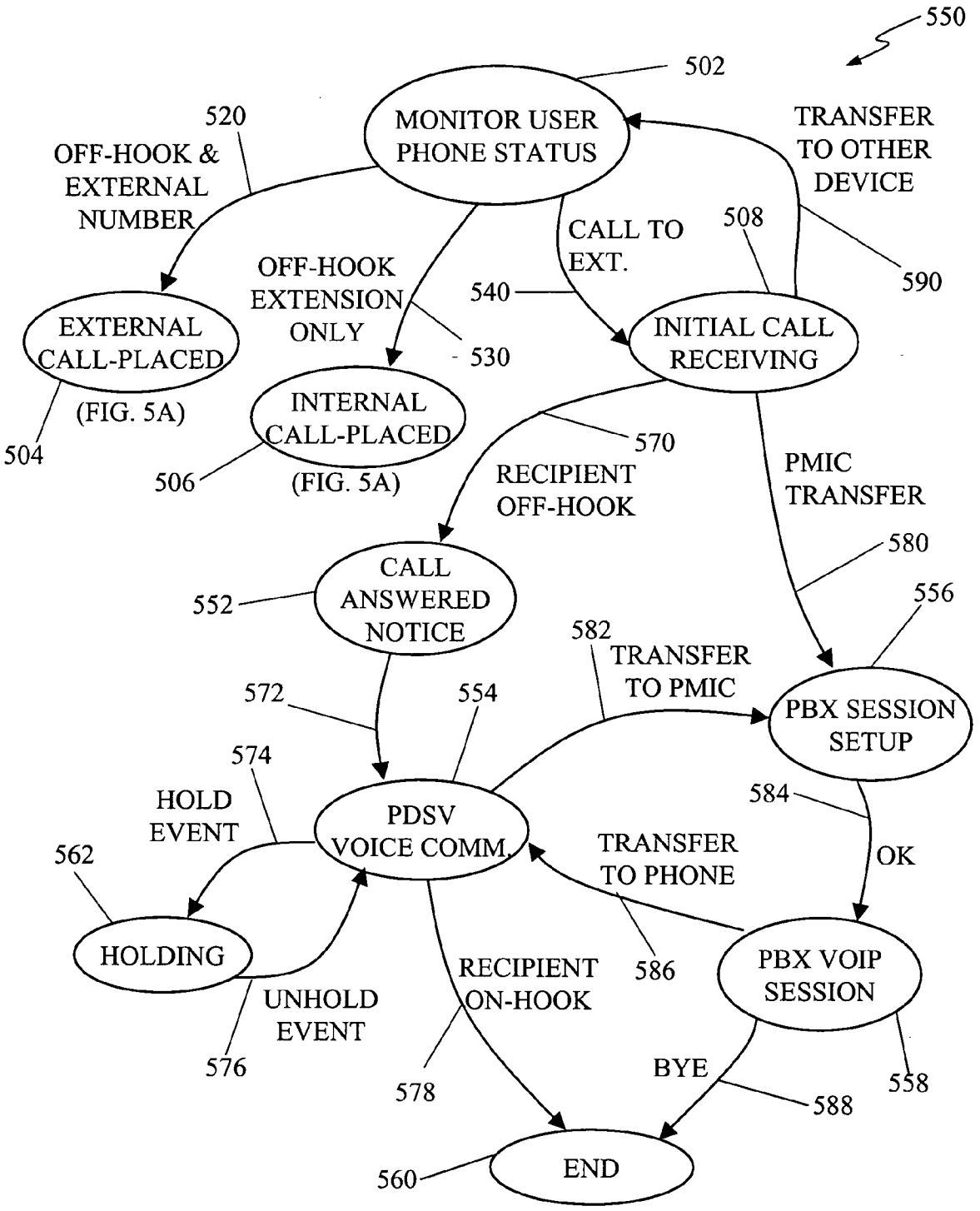
550
502
MONITOR USER PHONE STATUS
520
OFF-HOOK & EXTERNAL NUMBER
TRANSFER TO OTHER DEVICE
508
590
CALL TO EXT.
OFF-HOOK EXTENSION ONLY
530
540
EXTERNAL CALL-PLACED
(FIG. 5A)
504
INTERNAL CALL-PLACED
(FIG. 5A)
506
INITIAL CALL RECEIVING
570
RECIPIENT OFF-HOOK
PMIC TRANSFER
580
CALL ANSWERED NOTICE
552
556
582
TRANSFER TO PMIC
572
554
PBX SESSION SETUP
574
HOLD EVENT
584
PDSV VOICE COMM.
562
TRANSFER TO PHONE
OK
HOLDING
RECIPIENT ON-HOOK
586
PBX VOIP SESSION
UNHOLD EVENT
576
578
BYE
558
588
END
560

FIG. 5B

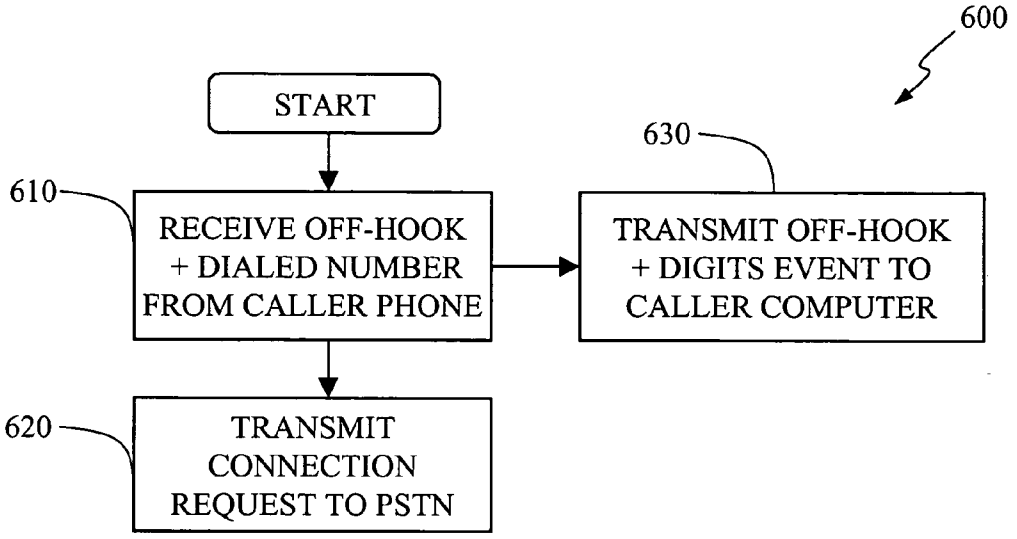
600
START
610
RECEIVE OFF-HOOK + DIALED NUMBER FROM CALLER PHONE
620
TRANSMIT CONNECTION REQUEST TO PSTN
630
TRANSMIT OFF-HOOK + DIGITS EVENT TO CALLER COMPUTER

FIG. 6

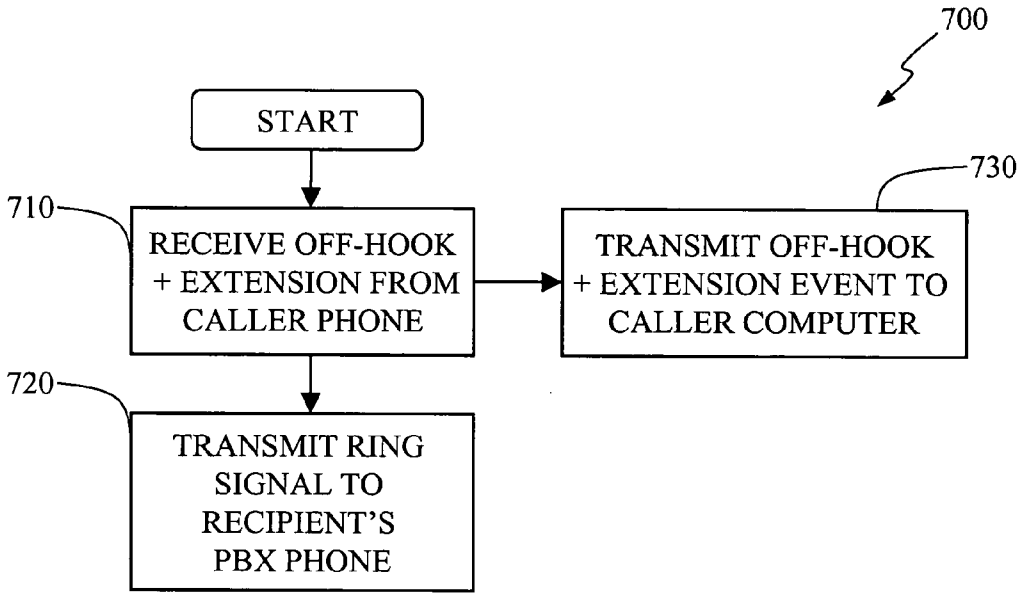
700
START
710
RECEIVE OFF-HOOK + EXTENSION FROM CALLER PHONE
720
TRANSMIT RING SIGNAL TO RECIPIENT'S PBX PHONE
730
TRANSMIT OFF-HOOK + EXTENSION EVENT TO CALLER COMPUTER

FIG. 7

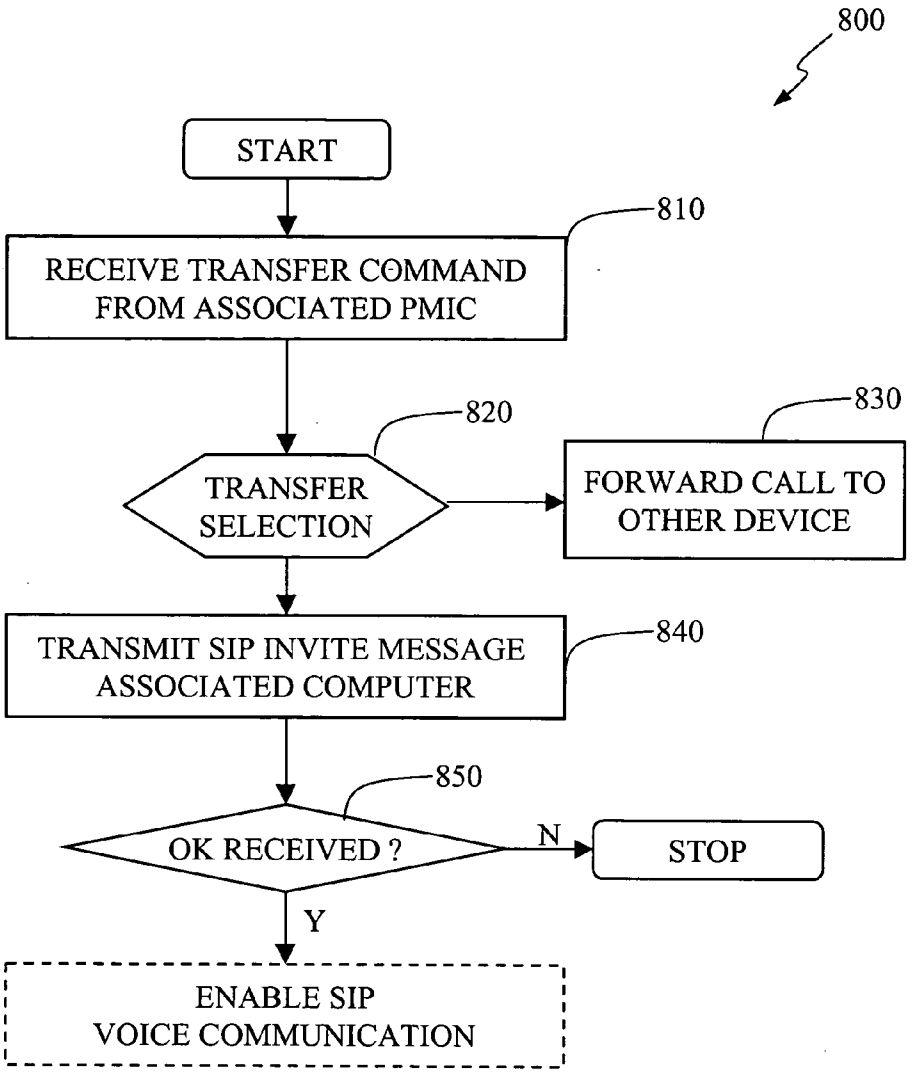
800
START
810
RECEIVE TRANSFER COMMAND FROM ASSOCIATED PMIC
820
TRANSFER SELECTION
830
FORWARD CALL TO OTHER DEVICE
840
TRANSMIT SIP INVITE MESSAGE ASSOCIATED COMPUTER
850
OK RECEIVED ?
N
STOP
Y
ENABLE SIP VOICE COMMUNICATION

FIG. 8

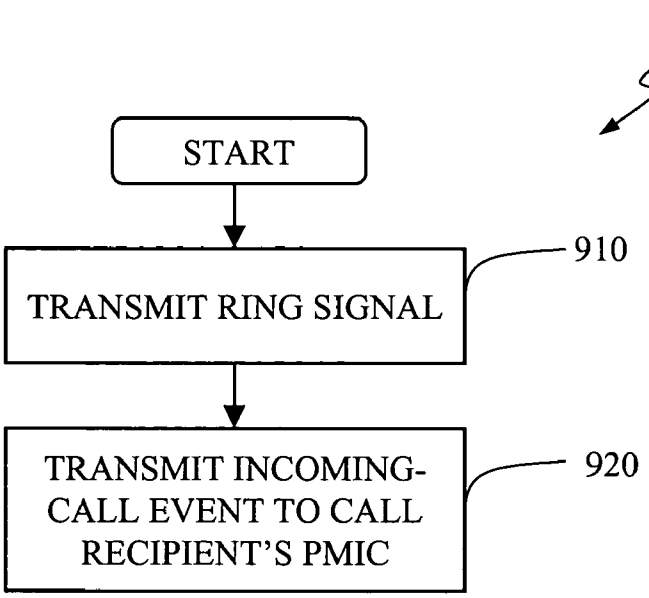
900
START
910
TRANSMIT RING SIGNAL
920
TRANSMIT INCOMING-CALL EVENT TO CALL RECIPIENT'S PMIC

FIG. 9

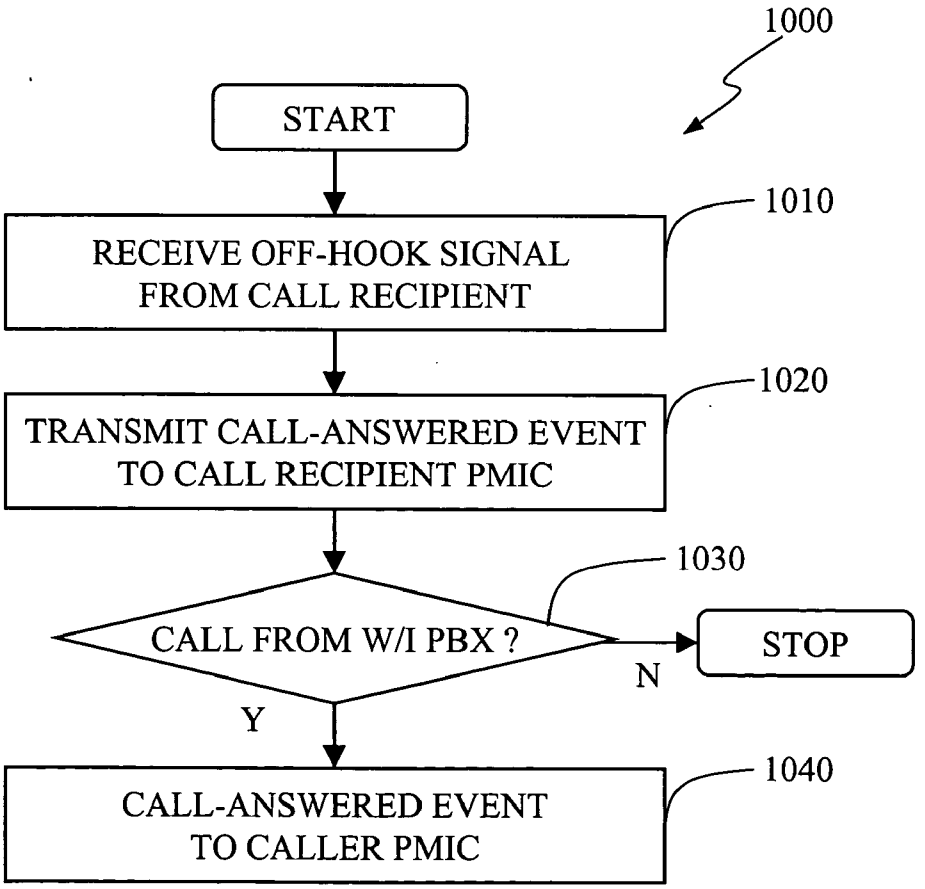
1000
START
1010
RECEIVE OFF-HOOK SIGNAL FROM CALL RECIPIENT
1020
TRANSMIT CALL-ANSWERED EVENT TO CALL RECIPIENT PMIC
1030
CALL FROM W/I PBX ?
N
STOP
Y
1040
CALL-ANSWERED EVENT TO CALLER PMIC

FIG. 10

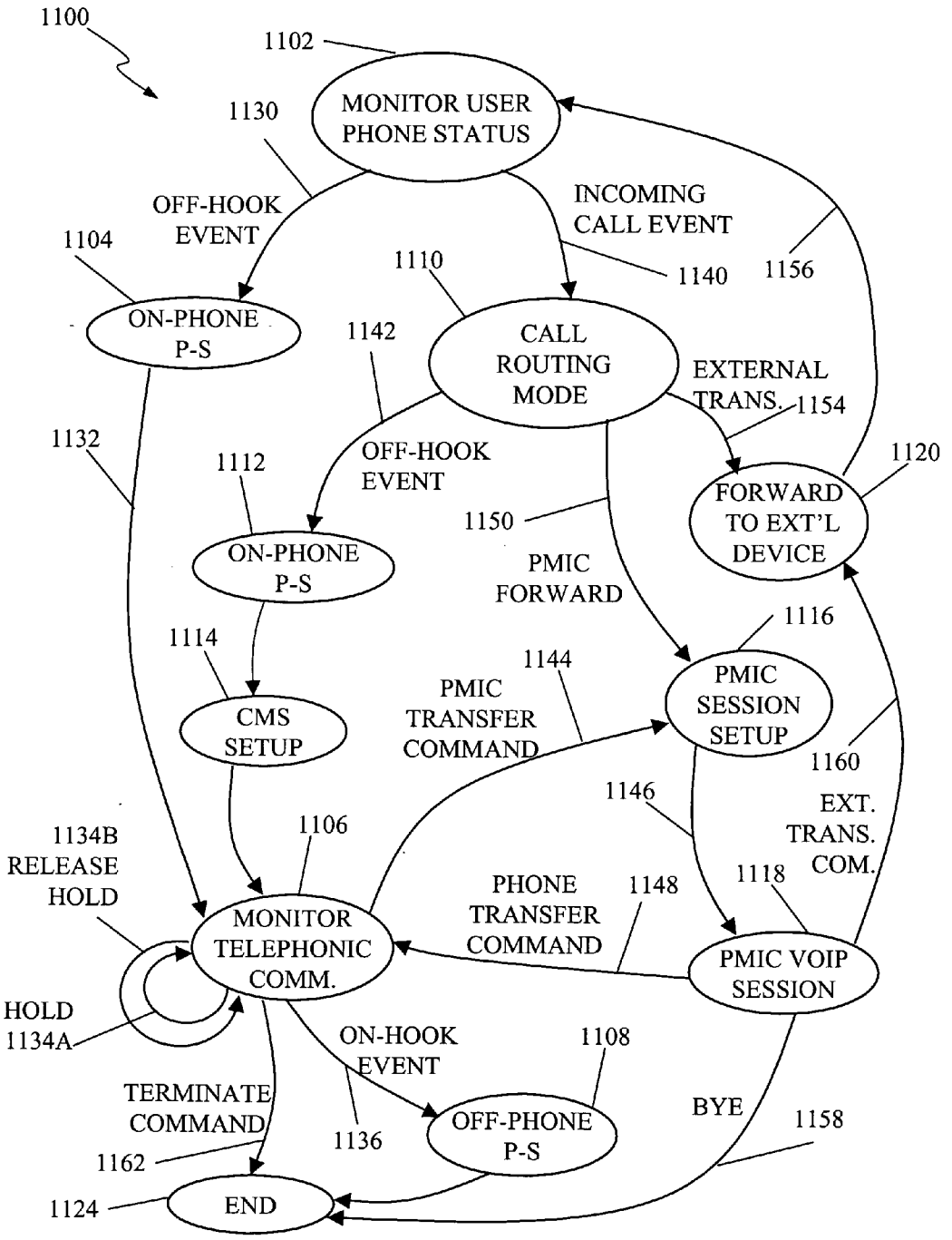
1100
1102
MONITOR USER PHONE STATUS
1130
OFF-HOOK EVENT
INCOMING CALL EVENT
1104
1110
1140
1156
ON-PHONE P-S
1142
CALL ROUTING MODE
EXTERNAL TRANS.
1154
1132
1112
OFF-HOOK EVENT
1120
FORWARD TO EXT'L DEVICE
1150
ON-PHONE P-S
PMIC FORWARD
1116
1114
1144
PMIC SESSION SETUP
PMIC TRANSFER COMMAND
CMS SETUP
1160
1146
EXT. TRANS. COM.
1134B RELEASE HOLD
1106
1118
PHONE TRANSFER COMMAND
1148
MONITOR TELEPHONIC COMM.
PMIC VOIP SESSION
HOLD 1134A
ON-HOOK EVENT
1108
TERMINATE COMMAND
BYE
1158
1136
OFF-PHONE P-S
1162
1124
END

FIG. 11

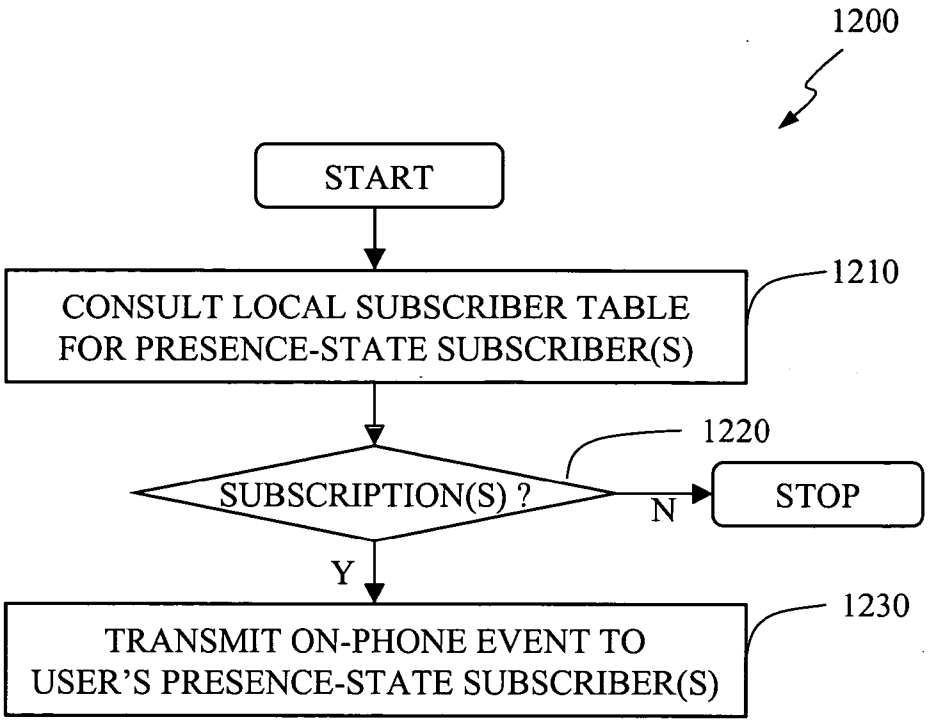

FIG. 12A

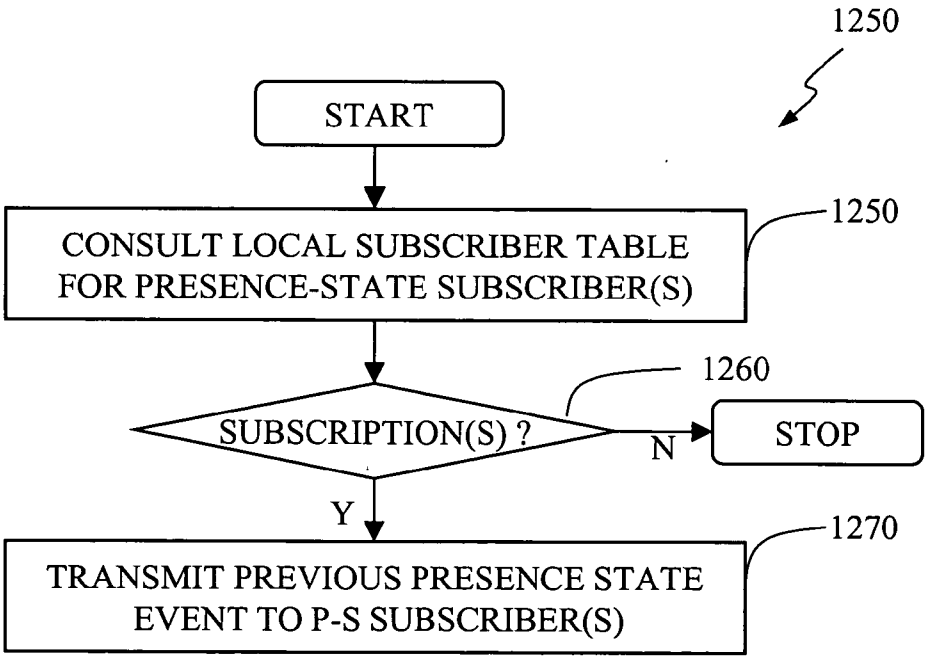

FIG. 12B

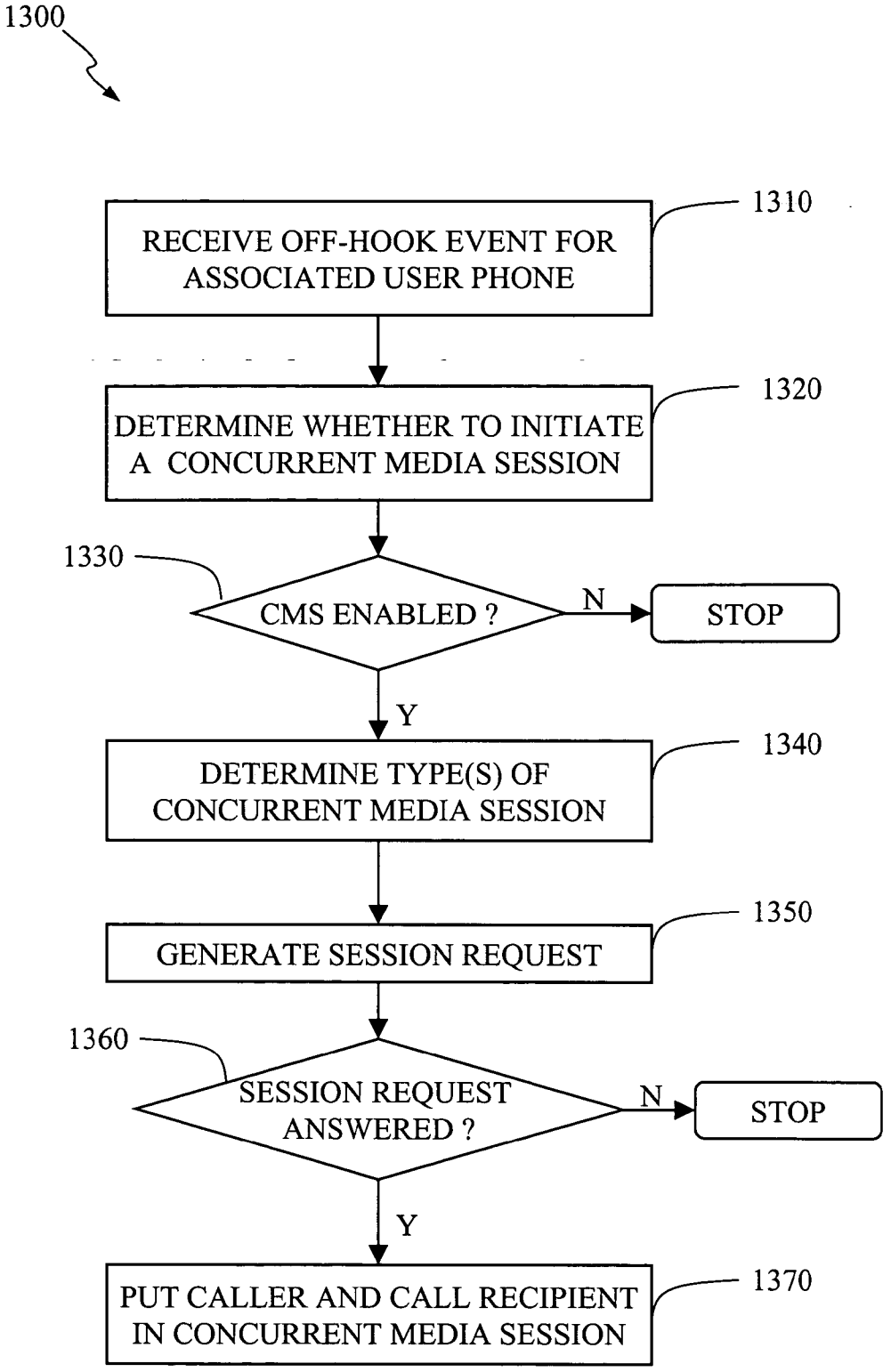
1300
RECEIVE OFF-HOOK EVENT FOR ASSOCIATED USER PHONE
1310
DETERMINE WHETHER TO INITIATE A CONCURRENT MEDIA SESSION
1320
1330
CMS ENABLED ?
N
STOP
Y
DETERMINE TYPE(S) OF CONCURRENT MEDIA SESSION
1340
GENERATE SESSION REQUEST
1350
1360
SESSION REQUEST ANSWERED ?
N
STOP
Y
PUT CALLER AND CALL RECIPIENT IN CONCURRENT MEDIA SESSION
1370

FIG. 13

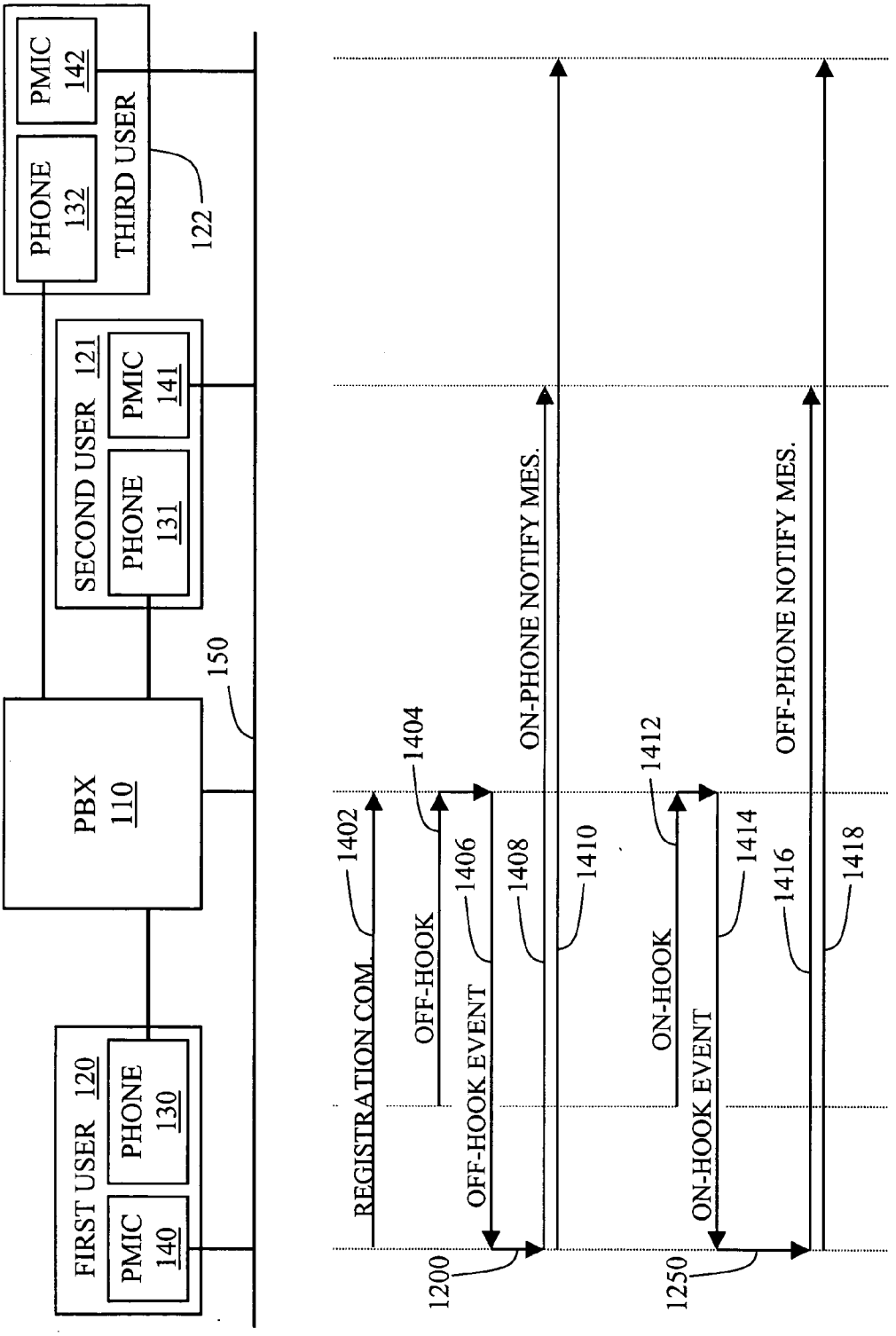
FIRST USER 120
PMIC 140
PHONE 130
PBX 110
150
SECOND USER 121
PHONE 131
PMIC 141
THIRD USER
PHONE 132
PMIC 142
122
REGISTRATION COM.
1402
OFF-HOOK
1404
OFF-HOOK EVENT
1406
1408
ON-PHONE NOTIFY MES.
1410
1200
ON-HOOK
1412
ON-HOOK EVENT
1414
1416
OFF-PHONE NOTIFY MES.
1418
1250

FIG. 14

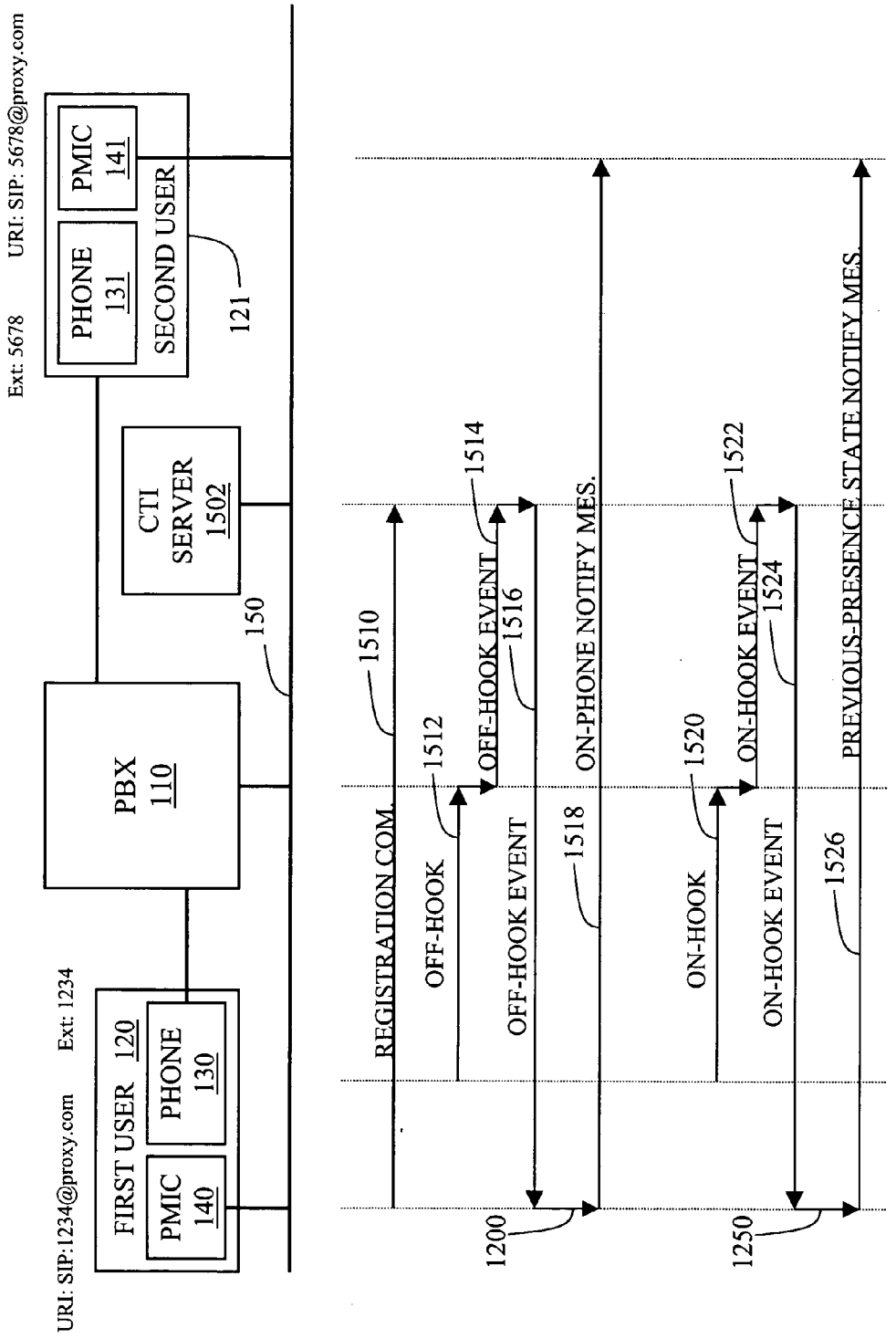
Ext: 5678
URI: SIP: 5678@proxy.com
PHONE 131
PMIC 141
SECOND USER
121
CTI SERVER 1502
PBX 110
150
FIRST USER 120
PMIC 140
PHONE 130
URI: SIP:1234@proxy.com
Ext: 1234
REGISTRATION COM.
1510
OFF-HOOK
1512
OFF-HOOK EVENT
1514
OFF-HOOK EVENT
1516
ON-PHONE NOTIFY MES.
1518
1200
ON-HOOK
1520
ON-HOOK EVENT
1522
ON-HOOK EVENT
1524
PREVIOUS-PRESENCE STATE NOTIFY MES.
1526
1250

FIG. 15

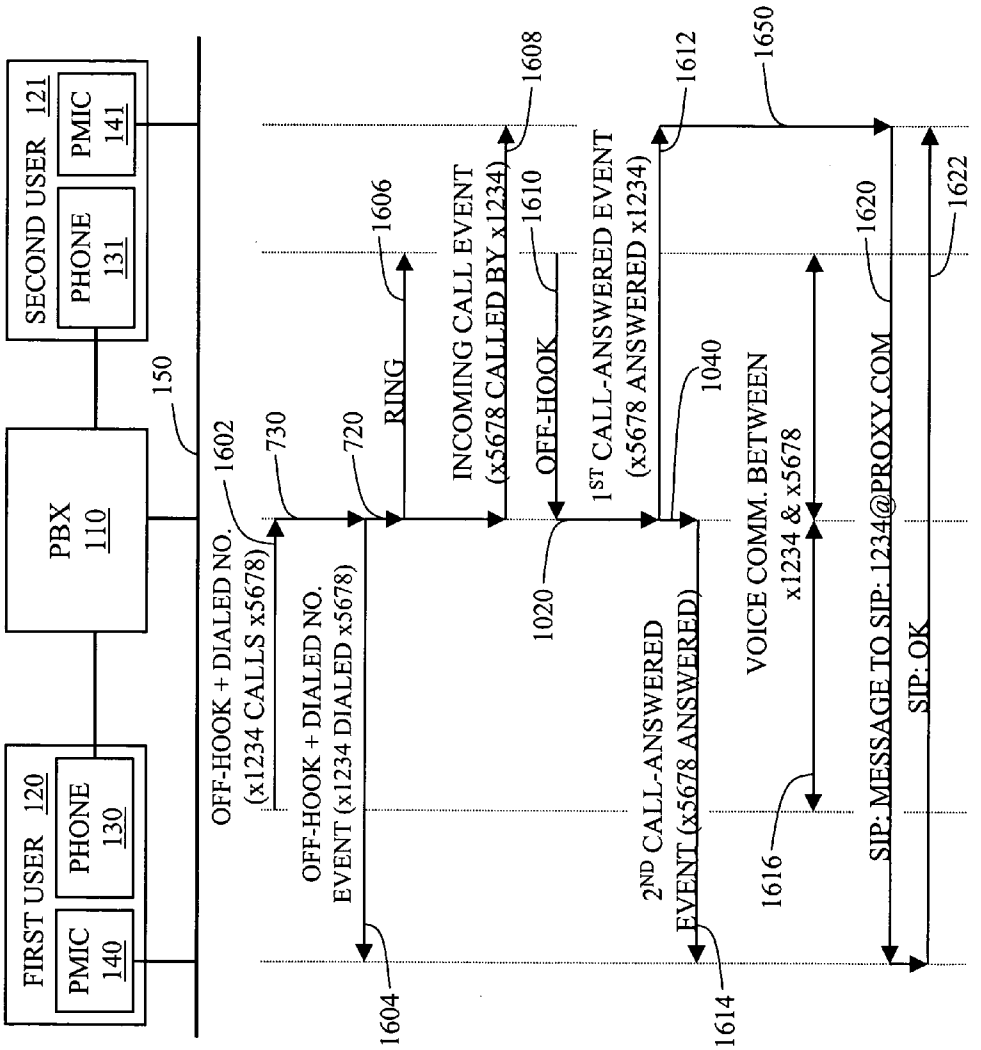
FIRST USER 120
PMIC 140
PHONE 130
PBX 110
150
SECOND USER 121
PHONE 131
PMIC 141
OFF-HOOK + DIALED NO. (x1234 CALLS x5678)
1602
730
OFF-HOOK + DIALED NO. EVENT (x1234 DIALED x5678)
720
RING
1606
INCOMING CALL EVENT (x5678 CALLED BY x1234)
1608
OFF-HOOK
1610
1020
1ST CALL-ANSWERED EVENT (x5678 ANSWERED x1234)
1612
1040
2ND CALL-ANSWERED EVENT (x5678 ANSWERED)
1650
VOICE COMM. BETWEEN x1234 & x5678
1620
1616
SIP: MESSAGE TO SIP: 1234@PROXY.COM
SIP: OK
1622
1604
1614

FIG. 16A

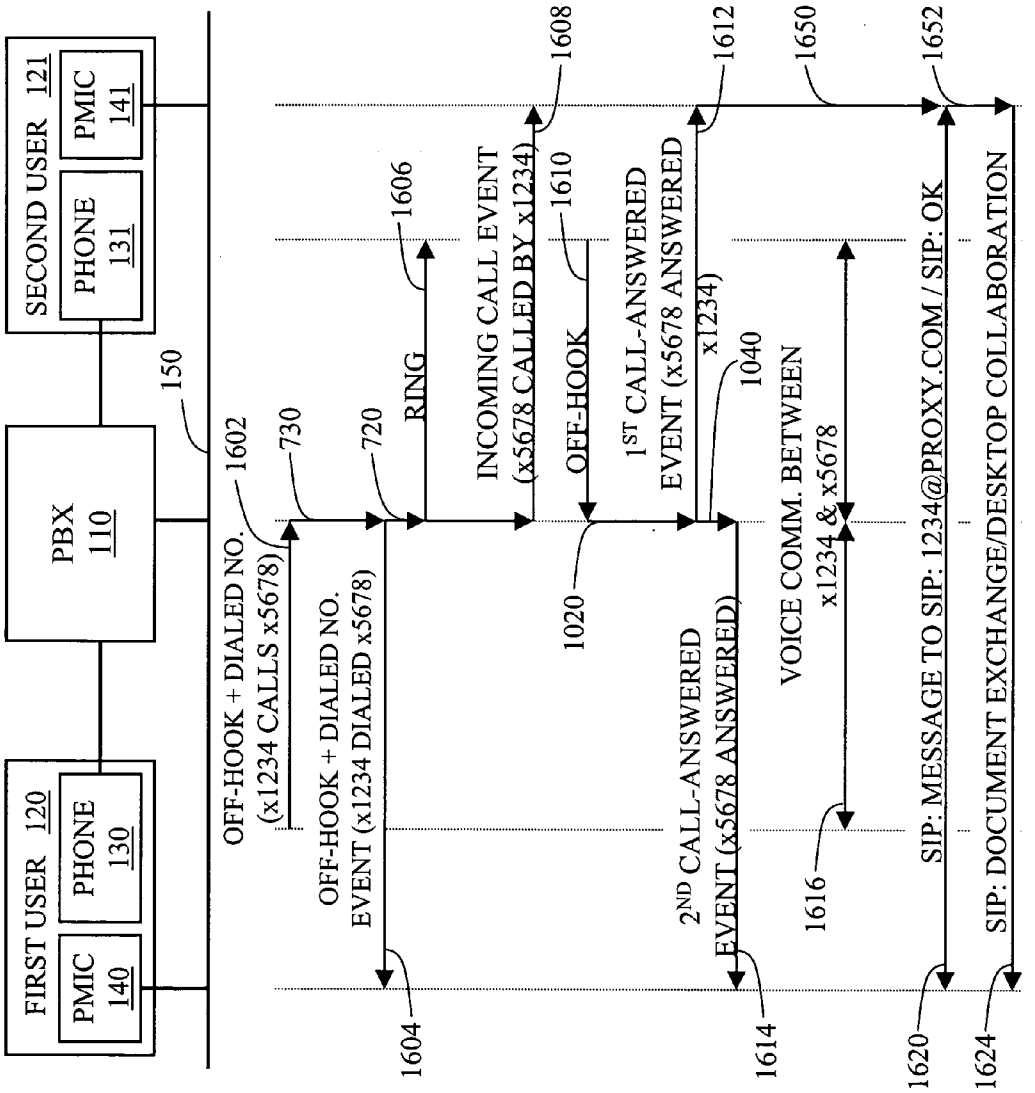
FIRST USER 120
PMIC 140
PHONE 130
PBX 110
150
SECOND USER 121
PHONE 131
PMIC 141
OFF-HOOK + DIALED NO. (x1234 CALLS x5678)
1602
730
OFF-HOOK + DIALED NO. EVENT (x1234 DIALED x5678)
720
RING
1606
INCOMING CALL EVENT (x5678 CALLED BY x1234)
1608
OFF-HOOK
1610
1020
1ST CALL-ANSWERED EVENT (x5678 ANSWERED x1234)
1612
1040
2ND CALL-ANSWERED EVENT (x5678 ANSWERED)
VOICE COMM. BETWEEN x1234 & x5678
1650
1616
SIP: MESSAGE TO SIP: 1234@PROXY.COM / SIP: OK
1652
SIP: DOCUMENT EXCHANGE/DESKTOP COLLABORATION
1604
1614
1620
1624

FIG. 16B

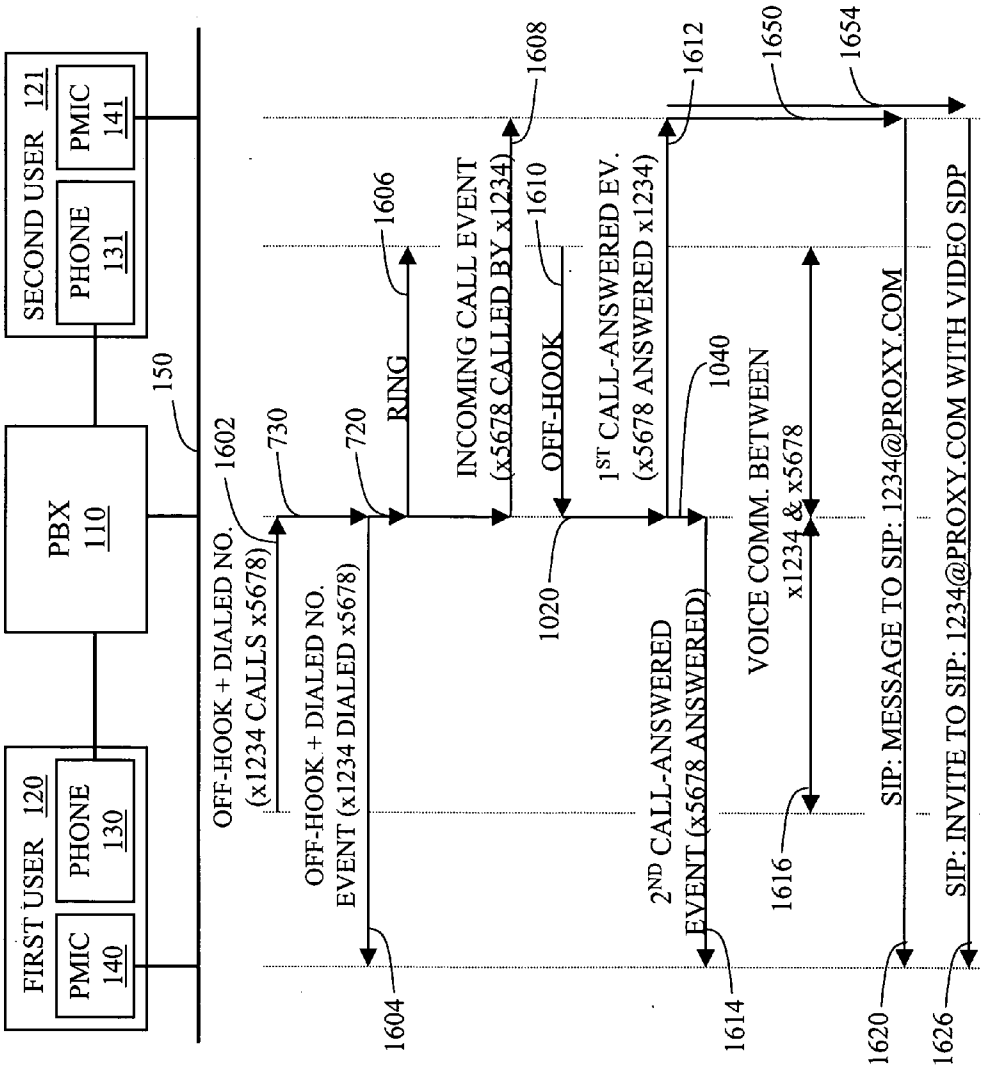
FIRST USER 120
PMIC 140
PHONE 130
PBX 110
150
SECOND USER 121
PHONE 131
PMIC 141
OFF-HOOK + DIALED NO. (x1234 CALLS x5678)
1602
730
OFF-HOOK + DIALED NO. EVENT (x1234 DIALED x5678)
720
RING
1606
INCOMING CALL EVENT (x5678 CALLED BY x1234)
1608
OFF-HOOK
1610
1020
1ST CALL-ANSWERED EV. (x5678 ANSWERED x1234)
1612
2ND CALL-ANSWERED EVENT (x5678 ANSWERED)
1040
VOICE COMM. BETWEEN x1234 & x5678
1650
1616
SIP: MESSAGE TO SIP: 1234@PROXY.COM
1654
SIP: INVITE TO SIP: 1234@PROXY.COM WITH VIDEO SDP
1604
1614
1620
1626

FIG. 16C

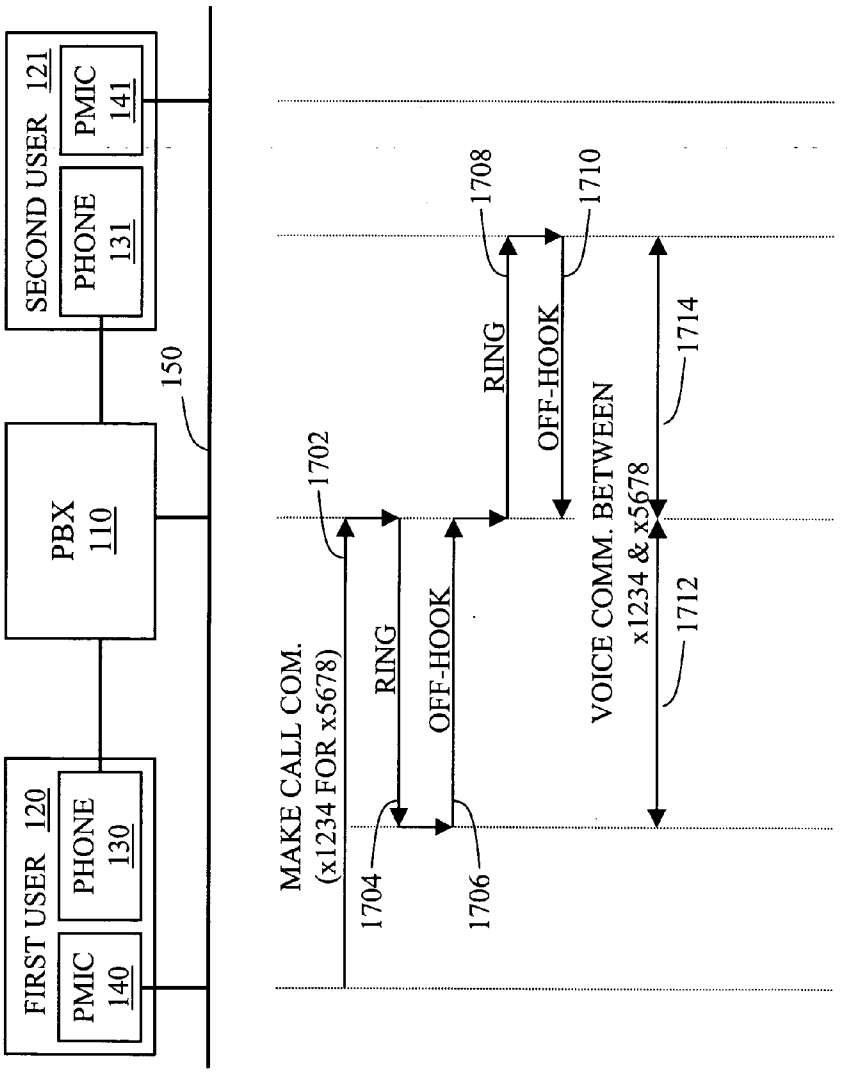
SECOND USER 121
PHONE 131
PMIC 141
150
PBX 110
FIRST USER 120
PHONE 130
PMIC 140
MAKE CALL COM. (x1234 FOR x5678)
1702
RING
1704
OFF-HOOK
1706
RING
1708
OFF-HOOK
1710
VOICE COMM. BETWEEN x1234 & x5678
1712
1714

FIG. 17

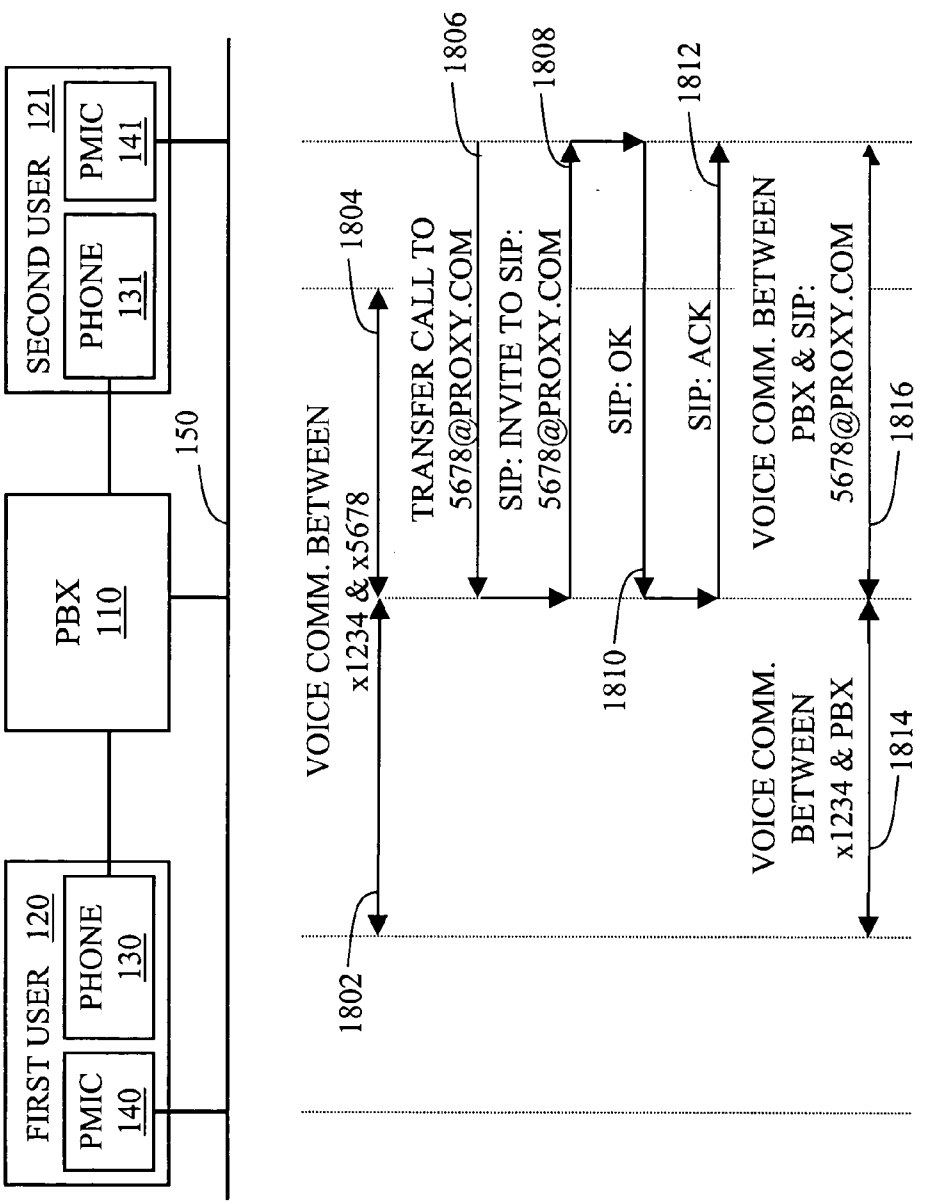
FIRST USER 120
PMIC 140
PHONE 130
PBX 110
SECOND USER 121
PHONE 131
PMIC 141
150
VOICE COMM. BETWEEN x1234 & x5678
TRANSFER CALL TO 5678@PROXY.COM
SIP: INVITE TO SIP: 5678@PROXY.COM
SIP: OK
SIP: ACK
VOICE COMM. BETWEEN PBX & SIP: 5678@PROXY.COM
VOICE COMM. BETWEEN x1234 & PBX
1802
1804
1806
1808
1810
1812
1814
1816

FIG. 18A

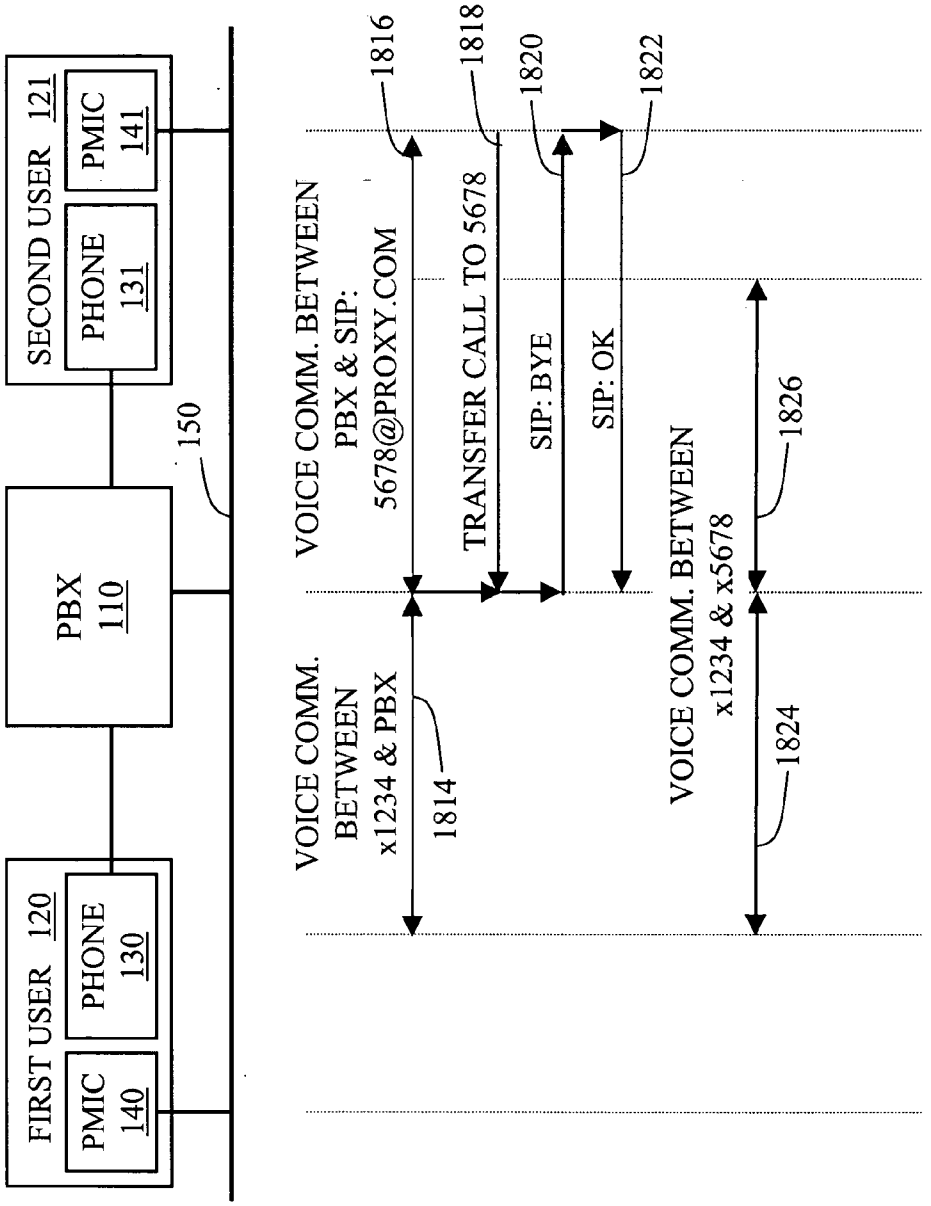
FIRST USER 120
PMIC 140
PHONE 130
PBX 110
SECOND USER 121
PHONE 131
PMIC 141
150
VOICE COMM. BETWEEN x1234 & PBX
1814
VOICE COMM. BETWEEN PBX & SIP: 5678@PROXY.COM
1816
TRANSFER CALL TO 5678
1818
SIP: BYE
1820
SIP: OK
1822
VOICE COMM. BETWEEN x1234 & x5678
1824
1826

FIG. 18B

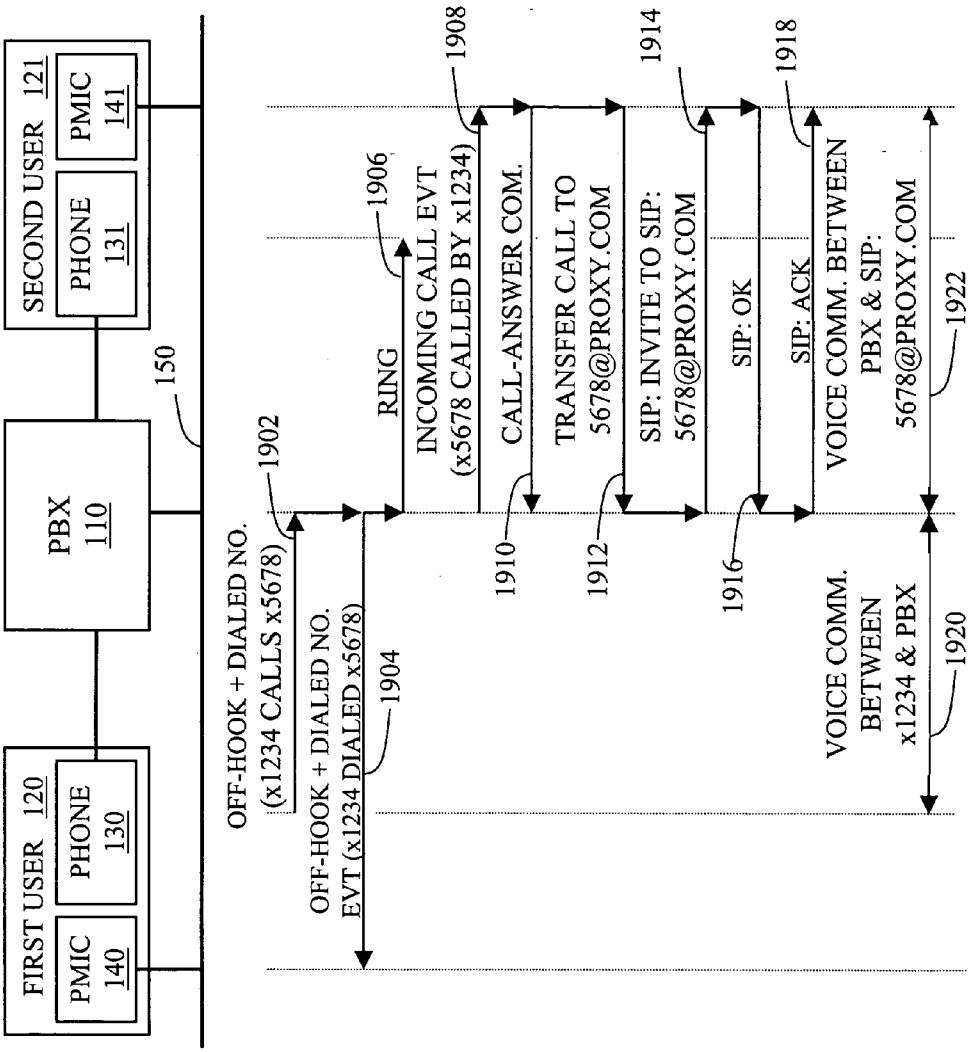
FIRST USER 120
PMIC 140
PHONE 130
PBX 110
150
SECOND USER 121
PHONE 131
PMIC 141
OFF-HOOK + DIALED NO. (x1234 CALLS x5678)
1902
OFF-HOOK + DIALED NO. EVT (x1234 DIALED x5678)
1904
RING
1906
INCOMING CALL EVT (x5678 CALLED BY x1234)
1908
CALL-ANSWER COM.
1910
TRANSFER CALL TO 5678@PROXY.COM
1912
SIP: INVITE TO SIP: 5678@PROXY.COM
1914
SIP: OK
1916
SIP: ACK
1918
VOICE COMM. BETWEEN PBX & SIP: 5678@PROXY.COM
1922
VOICE COMM. BETWEEN x1234 & PBX
1920

FIG. 19

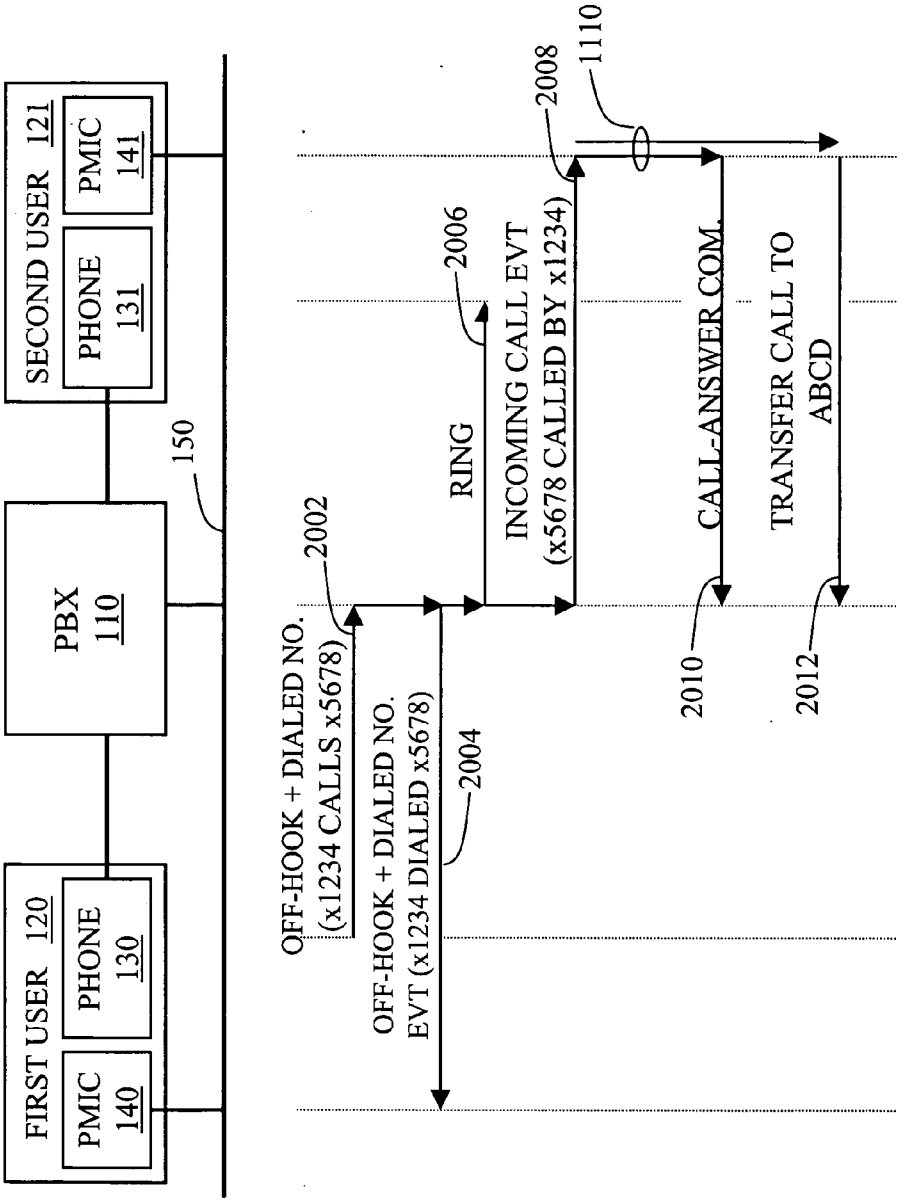
FIRST USER 120
PMIC 140
PHONE 130
PBX 110
150
SECOND USER 121
PHONE 131
PMIC 141
OFF-HOOK + DIALED NO. (x1234 CALLS x5678)
2002
OFF-HOOK + DIALED NO. EVT (x1234 DIALED x5678)
2004
RING
2006
INCOMING CALL EVT (x5678 CALLED BY x1234)
2008
1110
CALL-ANSWER COM.
2010
TRANSFER CALL TO ABCD
2012

FIG. 20A

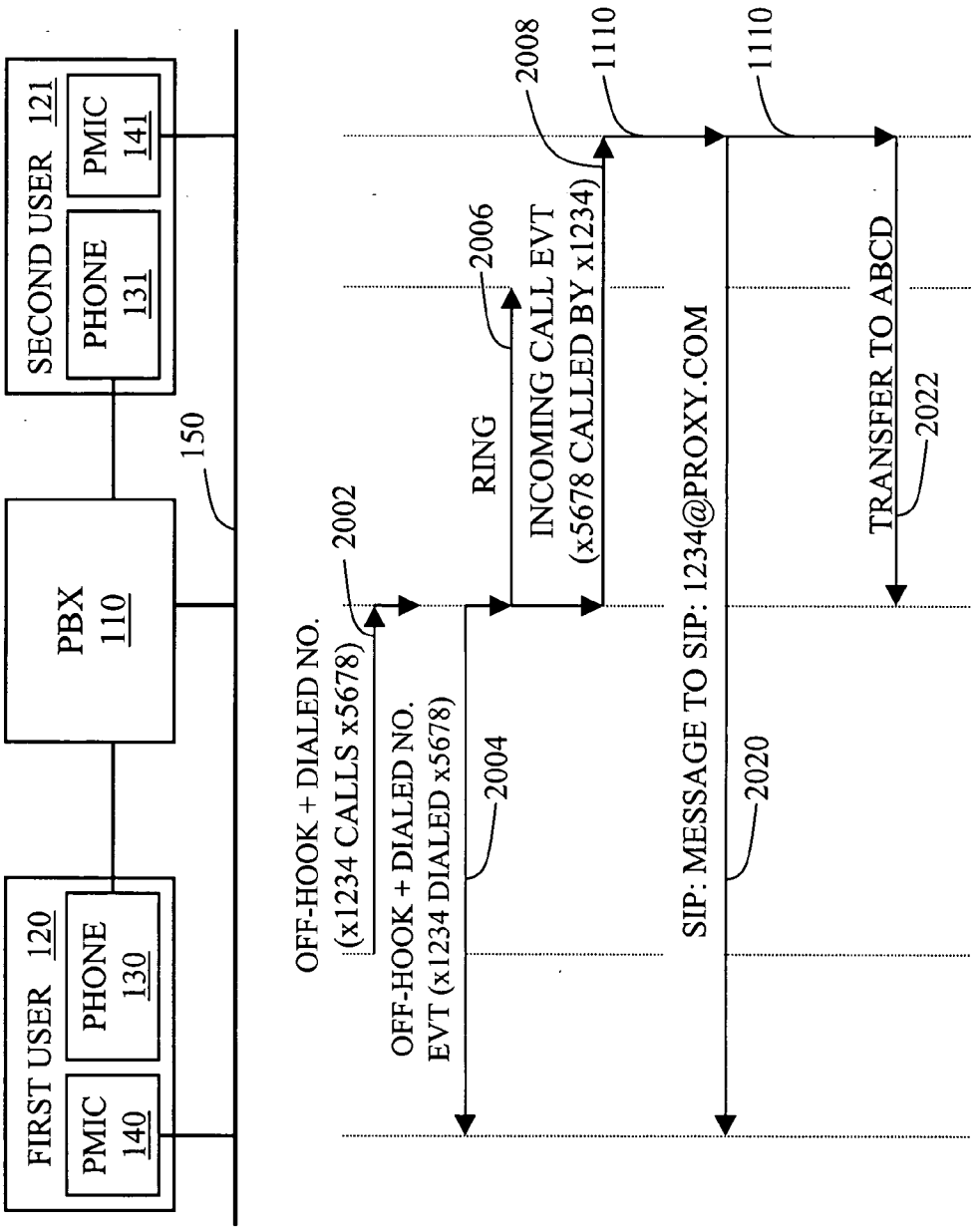
FIRST USER 120
PMIC 140
PHONE 130
PBX 110
150
SECOND USER 121
PHONE 131
PMIC 141
OFF-HOOK + DIALED NO. (x1234 CALLS x5678)
2002
OFF-HOOK + DIALED NO. EVT (x1234 DIALED x5678)
2004
RING
2006
INCOMING CALL EVT (x5678 CALLED BY x1234)
2008
1110
SIP: MESSAGE TO SIP: 1234@PROXY.COM
2020
1110
TRANSFER TO ABCD
2022

FIG. 20B

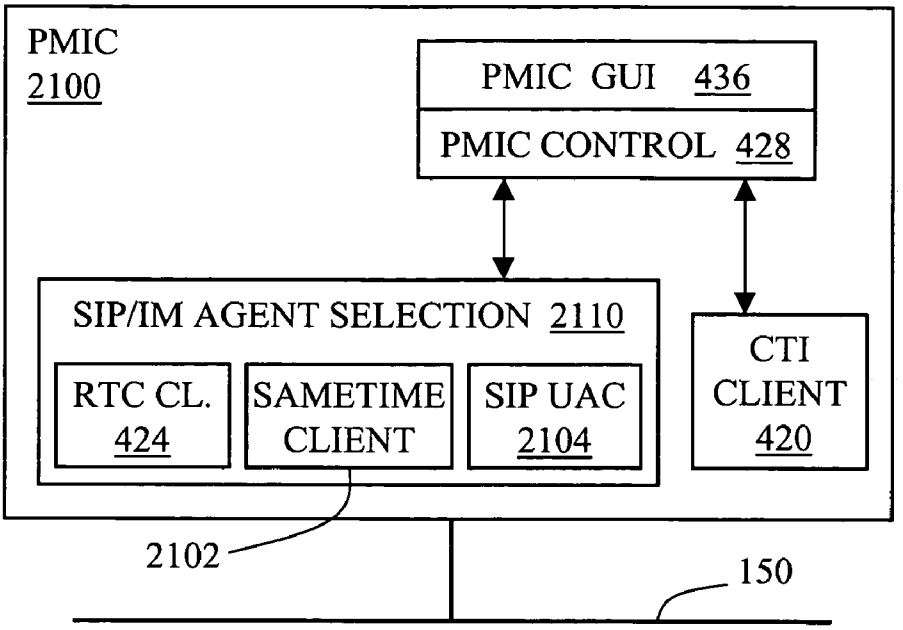
PMIC
2100
PMIC GUI 436
PMIC CONTROL 428
SIP/IM AGENT SELECTION 2110
RTC CL.
424
SAMETIME
CLIENT
SIP UAC
2104
CTI
CLIENT
420
2102
150

FIG. 21

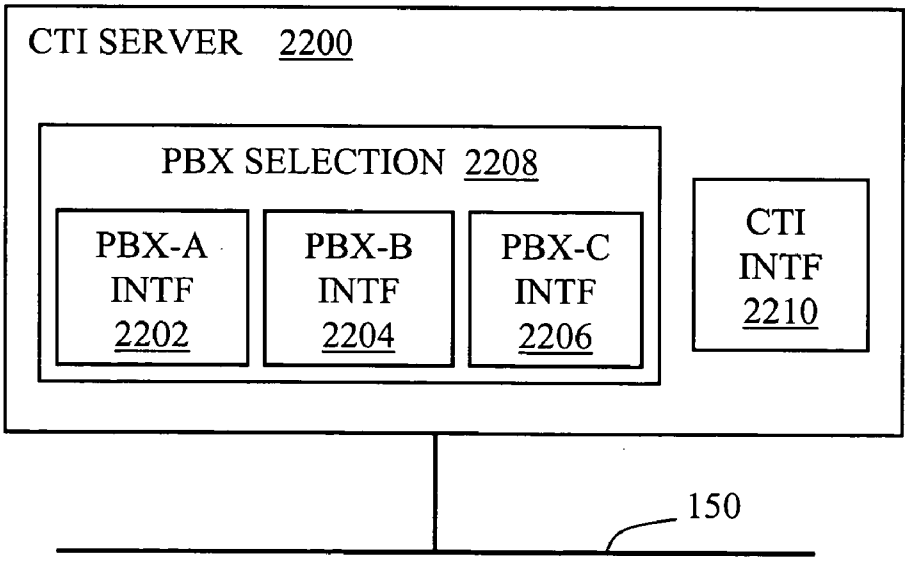
CTI SERVER 2200
PBX SELECTION 2208
PBX-A
INTF
2202
PBX-B
INTF
2204
PBX-C
INTF
2206
CTI
INTF
2210
150

FIG. 22

METHOD FOR TRANSFERRING CALLS BETWEEN PBX TELEPHONE AND SIP CLIENT

CROSS-REFERENCE TO RELATED APPLICATION

[0001] This application is a continuation of prior application Ser. No. 10/750,795 filed Dec. 31, 2003, which is hereby incorporated herein by reference for all purposes.

FIELD OF THE INVENTION

[0002] The present invention relates to a technique for integrating one or more user interfaces with a PBX phone system. In particular, the invention relates to a method and system for providing off-hook/on-hook presence notification for a PBX phone, establishing media sessions concurrent with PBX telephonic communication, customized call treatment for a PBX phone, call transfer capability between a PBX phone and numerous other devices, and PBX call control.

BACKGROUND

[0003] Private Branch Exchange (PBX) telephone systems are used in many businesses to enable workers to make and receive calls from the Public Switched Telephone Network (PSTN) and other PBX phones within the enterprise. PBX systems also provide a host of telephonic services to the enterprise workers including call forwarding, transferring, conferencing, voice mail, personalized greetings, and the like.

[0004] In many cases, an enterprise worker's phone resides on the desktop in immediate proximity to the worker's personal computer. The personal computer may provide tools for word processing, viewgraph editing, email, and web browsing, as well as other communications tools such as instant messaging, buddy lists, presence, video, and other tools for collaboration. Instant messaging allows people with network access to send text messages and other media to other individuals listed in a buddy or contact list. An instant text message is sent in near-real time to a contact where it is then displayed in a graphical user interface window within the context of an on-going text-based conversation. In addition to text messages, instant messaging may also be used within chat sessions and custom chat rooms where friends or co-workers can interact and share media. Some instant messaging applications are also enabled with a presence protocol used by a one person to determine whether a buddy or contact is "present" online and to subscribe to changes in the presence state or information.

[0005] Despite the prevalence of PBX phones and communications-enabled personal computers in the enterprise, there is an absence of sufficient integration between these two types of communication systems. For example, an enterprise worker's instant messaging application may be aware of the worker's online presence but is oblivious to the worker's telephonic presence, i.e. buddies do not know that a worker is occupied on his PBX phone. Or, as a second example, although a worker sets up a voice session to another worker by dialing a PBX extension, an entirely separate process must be followed to setup a session for exchanging a document. Therefore, there is a need for a solution that integrates the PBX system and communications applications on enterprise workers' computers to provide greater interoperability, simplified PBX control, and enhanced sharing and collaboration.

SUMMARY

[0006] The invention in its several embodiments features a method and system for using a computer interface to perform off-hook/on-hook presence notification for a PBX phone, establish media sessions concurrent with PBX telephonic communication, execute custom call treatment in conjunction with a PBX phone, implement call transfer capability between a PBX phone and numerous other devices, and provide PBX call control. The PBX is generally enabled with computer telephony integration (CTI) capabilities and may also, depending on the embodiment, be enabled with Voice-over-Internet Protocol (VoIP) capabilities such as Session Initiation Protocol (SIP). The computer interface may be any number of computer appliances including personal computer also enabled with CTI, for example.

[0007] In one embodiment, the invention relates to a presence notification method for communicating an enterprise worker's on-phone/off-phone presence state to other workers using a computer interface operatively coupled to a system comprising a private branch exchange (PBX) and a first PBX phone. The presence notification method preferably comprises the steps of: receiving from the PBX a first message indicating an off-hook state of the first PBX phone; consulting a subscriber table including the identity of one or more presence-state subscribers; and transmitting a second message to at least one of the one or more presence-state subscribers indicating the off-hook state of the first PBX phone.

[0008] In a second embodiment, the invention relates to a method for establishing a collateral communication session between a plurality of enterprise workers' computer interfaces in response to a call between the workers. The collateral communication session, referred to herein as a concurrent media session, may take a number of forms including text messaging, document exchange, desktop sharing, and video, for example. The method for establishing concurrent media session setup using a first computer interface operatively coupled to a system comprising a private branch exchange (PBX) and a second computer interface preferably comprises the steps of: receiving from the PBX a first message signifying that the second PBX phone has called the first PBX phone; transmitting a second message from the first computer interface to the second computer interface requesting a media session; determining whether the media session request has been accepted at the second computer interface; and establishing a media session between the first computer interface and second computer interface if the session request message is accepted.

[0009] In a third embodiment, the invention relates to a method for performing custom call treatment allowing a recipient of an incoming PBX call to respond to the call by transferring the call to another device or responding with an instant message, for example, depending on various factors including the caller, the time, and date. The call treatment method in a first computer interface operatively coupled to a system comprising a private branch exchange (PBX) and a first PBX phone preferably comprises the steps of: receiving from the PBX a first message indicating an incoming

call; determining from a call routing table maintained by the first computer interface an incoming call response to the incoming call; and transmitting a group of one or more messages based on the incoming call response, wherein the group comprises a second message answering the incoming call.

[0010] In a fourth embodiment, the invention relates to a method for transferring a call between an enterprise worker's PBX phone and an associated computer interface. The call transfer method in a first computer operatively coupled to a system comprising a private branch exchange (PBX) and a first PBX phone, preferably comprises the steps of: transmitting to the PBX a first message for transferring a telephone call associated with the first PBX phone; establishing a voice-over-IP session between the PBX and the first computer; and replacing the telephone call to first PBX phone with a call to the first computer via the voice-over-IP session.

[0011] In a fifth embodiment, the present invention relates to a method of controlling PBX telephone calls to a worker's PBX phone using a computer interface operatively coupled to a system comprising a PBX and a first PBX phone. The PBX call control method preferably comprises the steps of: receiving from the PBX a first message indicating the presence of a telephone call associated with the first PBX phone; and transmitting to the PBX a call control message, such as a call-hold command, or call-forwarding command directing the PBX to another PBX phone or VoIP client, for example.

BRIEF DESCRIPTION OF THE DRAWINGS

[0012] The present invention is illustrated by way of example and not limitation in the figures of the accompanying drawings, and in which:

[0013] **FIG. 1** is a functional block diagram of an enterprise network including a PBX system and Internet Protocol (IP) network, according to the preferred embodiment;

[0014] **FIG. 2A** is a functional block diagram of a PBX, according to the preferred embodiment;

[0015] **FIG. 2B** is a functional block diagram of a PBX processing module, according to the preferred embodiment;

[0016] **FIG. 3** is a functional block diagram of a PBX user phone, according to the preferred embodiment;

[0017] **FIG. 4A** is a functional block diagram of a enterprise worker's PBX-Messaging Integration Client (PMIC), according to the preferred embodiment;

[0018] **FIG. 4B** is a functional block diagram of a PMIC processing module, according to the preferred embodiment;

[0019] **FIGS. 5A and 5B** is a state diagram characterizing the PBX with which the preferred embodiment interoperates, according to the preferred embodiment;

[0020] **FIG. 6** is a flowchart of the PBX external-call-placed processing, according to the preferred embodiment;

[0021] **FIG. 7A** is a flowchart of the PBX internal-call-placed processing, according to the preferred embodiment;

[0022] **FIG. 8** is a flowchart of the PBX voice-over-IP (VoIP) session setup, according to the preferred embodiment;

[0023] **FIG. 9** is a flowchart of the PBX call-receiving state processing, according to the preferred embodiment;

[0024] **FIG. 10** is a flowchart of the PBX call-answered state processing, according to the preferred embodiment;

[0025] **FIG. 11** is a state diagram characterizing the PBX-Messaging Integration Client (PMIC) processing, according to the preferred embodiment;

[0026] **FIG. 12A** is a flowchart of the on-phone presence state processing, according to the preferred embodiment;

[0027] **FIG. 12B** is a flowchart of the off-phone presence state processing, according to the preferred embodiment;

[0028] **FIG. 13** is a flowchart of the concurrent media session setup procedure, according to the preferred embodiment;

[0029] **FIG. 14** is flow diagram depicting the method of distributing telephonic presence-sense notices, according to the preferred embodiment;

[0030] **FIG. 15** is a flow diagram demonstrating the use of a networked intermediate server with which the PBX and one or more PMICs may interoperate, according to the preferred embodiment;

[0031] **FIG. 16A** is a flow diagram demonstrating the procedure for establishing a first category of CMS between calling parties, according to the preferred embodiment;

[0032] **FIG. 16B** is a flow diagram demonstrating a first procedure for establishing a second category of CMS between calling parties, according to the preferred embodiment;

[0033] **FIG. 16C** is a flow diagram demonstrating a first procedure for establishing a third category of CMS between calling parties, according to the preferred embodiment;

[0034] **FIG. 17** is a flow diagram demonstrating a call initiated from the PMIC, according to the preferred embodiment;

[0035] **FIG. 18A** is a flow diagram demonstrating an on-going telephone communication being transferred from a user PBX phone to an associated PMIC, according to the preferred embodiment;

[0036] **FIG. 18B** is a flow diagram demonstrating an on-going telephone communication being transferred from PMIC to an associated PBX phone, according to the preferred embodiment;

[0037] **FIG. 19** is a flow diagram demonstrating a PMIC automatically answering an incoming call, according to the preferred embodiment;

[0038] **FIG. 20A** is a flow diagram demonstrating an incoming call being automatically forwarded by a PMIC, according to the preferred embodiment;

[0039] **FIG. 20B** is a flow diagram demonstrating a PMIC automatically responded to an incoming call with an instant message, according to the preferred embodiment;

[0040] **FIG. 21** is a functional block diagram of a PMIC with a plurality of selectable SIP user agents, according to the second preferred embodiment; and

[0041] **FIG. 22** is a CTI server with a plurality of PBX interfaces, according to the preferred embodiment.

DETAILED DESCRIPTION

[0042] **FIG. 1** is a block diagram of a PBX system operably coupled to a data network. The PBX system **100** comprises a PBX **110** and a plurality of PBX phones **130-132**, each phone being associated with a unique extension number. The PBX **110** manages calls between the plurality of user phones **131-133** and a set of trunk lines operably coupled to the Public Switch Telephone Network (PSTN) **102** while supporting call forwarding between PBX phones, conference calling, call holding, voice mail, personalized greetings, and the like. The PBX system **100** is consistent with both new telephone systems and a vast number of legacy telephone systems currently located at and operated by enterprises today.

[0043] Also operating within the enterprise is a data communications network **150** embodied in or operably coupled to a local area network (LAN), a wide area network (WAN), a metropolitan area network (MAN), the Internet Protocol (IP) network **104**, or a combination thereof. The communications network **150** operably couples a plurality of computers enabled with a PBX-Messaging Integration Client (PMIC) **140-142** distributed throughout the enterprise to each other and to the resources available through the World Wide Web using Ethernet and or the transmission control protocol (TCP)/IP protocol suite. Each of the PMICs **140-142** is generally associated with an individual enterprise worker. In most cases, an individual's PMIC is located in the immediate proximity to the individual's phone, thus giving rise to a logical association between a user PMIC and a user phone. The logical association between a PMIC, a phone, and a single user exist for a multiplicity of enterprise workers including a first user **120**, second user **121**, and third user **122**, and so on.

[0044] In the preferred embodiment, the PBX **110** is enabled with a computer telephone integration (CTI) protocol, which refers to a signaling convention by which the PMICs **140-142** may control and monitor PBX functions. In the preferred embodiment, the PMICs **140-142** are adapted to act as individualized clients for: (1) placing and answering PBX calls without a PBX phone, (2) routing incoming call directed PBX extensions to other devices, (3) forwarding calls away from PBX phones to other devices, and (4) placing calls on hold. In addition to receiving CTI commands, the PBX or the CTI client associated thereto is also adapted to transmit CTI messages upon occurrence of certain events, as is described in greater detail below. Also in the preferred embodiment, the PMIC provides an interface to presence, instant messaging, document exchange, desktop sharing and other capabilities typically resident in applications such Microsoft's Real-Time Communications (RTC) Messenger.

[0045] **FIG. 2A** represents a functional block diagram of the PBX **110** with which the enterprise PMICs **140-142** interoperate. The PBX **110** generally includes a cabinet or backplane including one or more trunk interfaces **220** for converting between the signal format and voice transmission of the PSTN **102** and the internal convention used by the PBX system **100**, a plurality of PBX phone interfaces or line cards **222** providing a connection to the user PBX phones **130-132**, a CTI interface **224** for transmitting and receiving CTI messages transmitted via the network **150**, and a switch controller **202** for creating and managing voice circuits between the trunk interfaces **220**, line cards **222**, and CTI interface **224**. The switch control **202** is generally an element of a processing module **200** embodying various call management services **204** including voice mail **206** and other interactive voice response (IVR) systems **208**, for example.

[0046] Signaling and voice communications between the PBX **110** and phones **130-132** are conventionally performed using a digital protocol, although an analog protocol may also be employed. The digital protocol, referred to herein a private digital signaling and voice (PDSV) protocol, comprises a signaling convention that includes operation-codes used to exchange voice communications as well control signals. Although well understood by those skilled in the art, PDSV protocols are generally proprietary implementations and differ between vendors. The major CTI standards are Telephony Application Programming interface (TAPI) and Telephony Services Application Programming Interface (TSAPI), as well as the European Communications Manufacturers Association (ECMA) standard for CTI, namely the Computer Supported Telecommunications Applications (CSTA) protocol.

[0047] Illustrated in **FIG. 2B** is a functional block diagram of a PBX processing module **200**. The PBX processing module **200** in the preferred embodiment incorporates one or more software and or firmware components that cooperate with switch control **202** to provide the PBX services **204**. The PBX processing module **200** may include an operating system **232**, e.g. UNIX-based system or proprietary implementation, that in turn supports a CTI message handler **234** adapted to generate and respond to various CTI commands in the manner set forth in greater detail below. When a CTI registration command is used to associate a PBX with a PMIC, for example, the CTI message handler **234** is adapted to transmit various event messages to the PMIC is response to various types of activities involving one or more PBX phones. In particular, the CTI handler **234** in the preferred embodiment is adapted to transmit a CTI off-hook event to a registered PMIC in response to an off-hook signal received from the associated PBX phone, transmit a CTI on-hook event to a registered PMIC in response to an on-hook signal from the associated PBX phone, transmit a incoming-call event to the PMIC associated with a PBX phone to which the PBX transmits a ring signal, a first call-answered event to the PMIC when the associated phone is used to answer an incoming call, and transmit a second call-answered event to the PMIC associated with the PBX phone used to place a call to another PBX phone when it is answered.

[0048] Illustrating in a **FIG. 3** is a functional block diagram of a PBX phone typical of user phones **130-132**. The user PBX phone preferably includes a handset and base unit **300** comprising a phone microprocessor module **310** that enables incoming and outgoing calls. The phone microprocessor module **310**, in combination with the user interface logic **316**, transmits input from the dial pad **314** and display relevant information at display **312**. The phone microprocessor module **310**, in cooperation with coder/decoder **322**, conveys incoming voice signals to an audio user interface (AUI) **320** speaker and outgoing voice signals received at an AUI **320** microphone to the PDSV interface **330**.

[0049] Illustrated in **FIG. 4A** is a functional block diagram of a user's PMIC **140-142**. The PMIC **400** generally includes the hardware and software necessary to provide access to and exchange voice and control signals with another VoIP client including, in some embodiments, the PBX **110**. In particular, the PMIC **400** comprises a processing module **410**, display **440**, tactile user interface **450** preferably including a keyboard, a AUI **460** with sound card and speaker, and a network interface card (NIC) **470** operably coupled to the data communications network **150**.

[0050] The processing module **410** generally comprises hardware components including a central processing unit **412**, computer memory **414**, and random access memory (RAM). As illustrated in **FIG. 4B**, the processing module **410** may further comprise software and or firmware components including a PMIC controller **428** and a PMIC graphical user interface (GUI) **434** used by the enterprise worker to monitor and configure the PMIC **428** as well as bridge between the PBX domain and the VoIP domain. The PMIC **428** in the preferred embodiment is adapted to monitor calls involving a PBX phone **130-132**, intervene in calls under certain circumstances in a manner defined by the user, and establish media sessions on behalf of an enterprise worker in parallel with a telephone call.

[0051] Upon receipt of an incoming call, the PMIC **428** generally consults routing logic **430** to whether to forward an incoming call to another PBX phone or other device, for example, or respond with a message transmitted via the network **150**. In the process of monitoring calls involving a user's PBX phone, the PMIC **428** may consult the subscriber table **432** to identify any Instant Messaging (IM) buddies in a contact list of changes in the enterprise worker's telephonic presence. In some circumstances, the PMIC **428** may also consult the concurrent media session (CMS) handler **434** to initiate transmission of an instant message, text chat or other voice and/or video media session between the PMICs of the users that are engaged in telephonic communication.

[0052] PMIC processing module **410** further comprises a CTI client **422**, preferably a CTI protocol stack, and Real-Time Communications (RTC) client **426** running on top of an operating system **418** such MS WINDOWS also by Microsoft Corporation. The CTI client **422** together with its CTI application programming interface (API) **420** provides the underlying functionality used to implement the various call control functionality embodied in the PMIC processing of the preferred embodiment. The RTC client **426** with RTC API **426** provides support for the Session Initiation Protocol (SIP) used in some embodiments to enable the CMSs, as discussed in greater detail below.

[0053] Although the PMICs **140-142** in the preferred embodiment are personal computers, one skilled in the art will appreciate that any of a variety of processing devices including desktop computers, laptop computers, personal digital assistants (PDA), Internet-enabled appliances, or mobile communication devices such as cellular phones may be adapted for purposes of this invention.

[0054] Illustrated in **FIGS. 5A and 5B** is a state diagram characterizing the PBX with which the preferred embodiment interoperates. The PBX **110** generally monitors (state **502**) the trunk lines to PSTN **102** as well as the internal phones **130-132**. The operation of the PBX **110** characterized by the method of **FIGS. 5A and 5B** generally falls into at least one of three different categories, namely, an outgoing call placed by a PBX user phone **130-132** to a device external to the PBX **110**, a internal call placed by a user phone **130-132** to another phone **130-132** within the PBX **110**, and or an incoming call to a user phone **130-132** from a device external to the PBX **110**.

[0055] When a call is initiated by a user phone **130-132**, an off-hook signal is transmitted from the phone to the PBX **110** with "digits" or dual-tone multi-frequency (DTMF) signals representing a phone number or a PBX extension number. If the off-hook signal **520** is accompanied by the phone number to an external phone, the PBX **110** transitions to an external call-placed state **504**, illustrated in greater detail in the external call process **600** of **FIG. 6**. Referring to **FIG. 6**, the PBX **110** identifies the digits representing external phone number received (step **610**) from user phone and transmits (step **620**) a connection request out to the PSTN **102**. Since the preferred embodiment of the PBX **110** is enabled with CTI, the PBX also transmits (step **630**) off-hook plus dialed-number events to the associated caller's computer **140-142** via the IP network **150**. The off-hook and dialed-number events are messages used to notify a device registered with the PBX, i.e. the caller's PMIC, that user phone has transitioned from on-hook to off-hook to make the call. In the preferred embodiment, a client on the network **150** must have registered for the notification at the PBX **110** using a registration event, e.g. a CTI message, requesting notifications about the state of user phone **130-132** identified by its extension number. Once registered, the PBX **110** directs the off-hook plus dialed-number events registered client.

[0056] Referring again to **FIG. 5A**, if the off-hook signal **530** is transmitted from the PBX phone **130-132** is accompanied by an extension number of a PBX phone **130-132** within the PBX **110**, the PBX transitions to an internal call-placed state **506** illustrated in greater detail in the internal call process **700** of **FIG. 7**. Referring to **FIG. 7**, the PBX **110** identifies the extension number received (step **710**) from user phone and transmits (step **720**) a ring signal to the call recipient's phone. The PBX also transmits (step **730**) an off-hook plus dialed-number event with the recipient's extension number to the caller's PMIC **140-142** via the IP network **150**. The off-hook dialed-number event is preferably a CTI message, used to notify the caller's computer that caller's phone is now in the off-hook state as well as the particular extension dialed. In the preferred embodiment, the off-hook plus dialed-number event including the extension is transmitted indirectly from the PBX **110** through a CTI Server to the caller's computer, although the PBX may be used to directly transmit the event to the caller's PMIC.

[0057] Referring to **FIG. 5A**, if the PBX **110** receives an answered signal **522** from the external call recipient, the PBX transitions from the external call-placed state **504** to the PDSV voice communication state **510**. Similarly, an off-hook signal **532** from the call recipient in response to the internal call-placed **506** will also cause the PBX **110** to transition to the PDSV voice communication state **510**. The PDSV voice communication state **510** represents the processing necessary for the PBX **110** to maintain voice communication, which may involve switch control **202** operations such as analog-to-digital conversion and filtering, signaling and the like. If the call recipient answers using is

a PBX phone, the PBX **110** may also send a call-answered event comprising the extension of the call recipient's PBX phone to the same registered client that the off-hook plus dialed-extension event was sent. The PDSV voice communication generally continues until a calling or called party goes on-hook **528** and terminates the voice communication (state **516**).

[**0058**] At nny time during the PDSV voice communications (state **510**), the call in progress may be transferred to another device. If the PBX **110** is enabled with a VoIP protocol, for example, the PBX can transfer the call in response to a transfer command **534**, e.g. a CTI message, with an identifier specifying the device to which the voice communication is to be redirected. If transferred to a VoIP client in the enterprise worker's PMIC, for example, the PBX **110** attempts to establish a VoIP session (state **512**) and transfer the caller side of the communication to a VoIP device. In the session setup process **800** associated with the session setup (state **512**) illustrated in **FIG. 8**, the PBX **110** uses the identifier from the transfer command received (step **810**) to determine in the transfer selection mode (step **820**) where to forward the VoIP call. A transfer command including a universal resource (URI) designating the caller's PMIC, for example, causes the PBX **110** to issue (step **840**) a session request message, e.g., a SIP INVITE, to a VoIP client in the caller's PMIC. If the PBX **110** receives a SIP OK message **542** in response to the session request message, the SIP OK testing (step **850**) is answered in the affirmative and SIP VoIP session (state **514**) replaces the prior PDSV communication between the caller's phone and PBX **110**. The PBX **110** may also be adapted to transfer calls to other resources (step **830**) including other PBX phones or external phones, for example.

[**0059**] After the SIP VoIP session is established (state **514**), a participant in the session may terminate the session and effectively end the call (state **516**) by issuing a VoIP termination message such as a SIP BYE message **544**. In the alternative, the participant may transfer the call back to a phone set (state **510**) using a transfer command **536** including the appropriate phone extension.

[**0060**] Any time during the PDSV voice communications (state **510**), the call in progress may be placed on hold (state **518**) by a hold PDSV operation code from the user's PBX phone or by a hold command **524** received by the PBX **110** from the user's PMIC **428** via the network **150**. Similarly, the call may be taken off hold in response to the appropriate operation code or an un-hold command from the user's PMIC **428**.

[**0061**] In addition to outgoing calls discussed above, the PBX **110** is also enabled to facilitate incoming calls. When a call **540** is directed to a user phone **130-132** from either another PBX user phone **130-132** or external PSTN line, the PBX **110** transitions into the initial call receiving state **508**. As illustrated the call receiving procedure **900** of **FIG. 9** associated with the initial call receiving state **508** of **FIG. 5B**, the PBX **110** transmits (step **910**) the incoming connection request to the recipient's phone in the form of a ring signal. The PBX **110** in the preferred embodiment also transmits (step **920**) an incoming-call event, e.g. a CTI message, via the network **150** to notify the recipient's PMIC of the connection request.

[**0062**] In the preferred embodiment, the incoming call may be answered at the recipient's PBX phone or by way of a CTI answer event received by the PBX **110** from the user's PMIC via the network **150**. Upon receipt of an off-hook signal **570** from the PBX phone, the PBX **110** transitions to the call answered (state **552**) illustrated in more detail in the call answered process **1000** of **FIG. 10**. As shown, receipt of the off-hook signal (step **1010**) causes the PBX **110** to transmit (step **1020**) a first call-answered event, e.g., a CTI message, notifying the recipient's PMIC that the call has been accepted at the associated PBX phone. If the call is also initiated from a PBX phone **130-132** within the PBX system **100**, internal-caller testing (step **1030**) is answered in the affirmative and the PBX **110** generates a second call-answered event transmitted (step **1040**) to the caller's PMIC. The second call-answered event, e.g. a CTI message, notifies the caller's PMIC when the call is answered by the call recipient at the recipient's PBX phone or other device. Subsequent PDSV voice communications in state **554** are analogous to that discussed above in context of PDSV voice communication state **510**.

[**0063**] When the incoming call is answered at the call recipient's PMIC, the PBX **110** generally receives an answer command accompanied by a transfer command from the PMIC. The transfer command includes a URI designating the user's PMIC or a SIP user agent therein and the PBX **110** transitions to the PBX's VoIP session setup state **556** consistent with the VoIP session setup state **514** discussed above. If the session request message issued by the PBX **110** is accepted, the PBX transitions into the PBX's VoIP session (state **558**) and the PDSV voice communication terminated. The recipient may subsequently transfer **586** the call between the PDSV voice communication (state **554**) and the VoIP session (state **558**) in the manner described above.

[**0064**] If the transfer command **590** received while in the initial call receiving (state **508**) includes a URI designating a phone, computer, or user agent other than that of the recipient, the PBX **110** effectively transfers the call to the other device and returns to monitoring the phone status (state **502**).

[**0065**] Illustrated in **FIG. 11** is a state diagram characterizing the PMIC for extending the scope and control of a PBX system and extending the scope of the presence sensing into the telephonic domain. The PMIC process **1100** is preferably embodied in one or more user computers within an enterprise that may have a new or existing PBX system consistent with operations discussed above. Each user computer **140-142** is adapted to execute the PMIC process **1100**, thereby making them PMICs. The plurality of PMICs that interoperate with one another and the PBX **110** constitute a PMIC system. In general, there is a one-to-one relationship between a PMIC and an enterprise worker's PBX phone.

[**0066**] A PMIC generally monitors (state **1102**) the IP network **150** for messages transmitted by the PBX **110** as well as other PMICs in the enterprise. The messages from the PBX **110** generally fall into one of two categories, namely, call-placed messages indicating that the PBX phone **130-132** with which the PMIC is associated is being used to place a call or incoming call messages indicating that the associated PBX phone is receiving a call from either another PBX user phone or external line.

[**0067**] When the PBX phone associated with the PMIC is used to place a call, the PMIC receives the off-hook event **1130** generated by PBX **102** and transitions into the on-

phone presence-state (P-S) processing (state **1104**). The P-S processing (state **1104**) is illustrated in greater detail in the on-phone P-S processing method **1200** of **FIG. 12A**. As illustrated, the PMIC consults (step **1210**) its local subscriber table **432** to identify the call recipient's presence-state subscribers. A P-S subscriber is party that has registered to receive notice of a co-worker's online presence and or telephonic availability. If one or more subscribers are identified (step **1220**), an on-phone event, e.g., a SIP message, is transmitted (step **1230**) to each subscriber to indicate that the party whose presence-state is being monitored has picked up the PBX phone. Referring to **FIG. 11**, the PMIC then indirectly monitors the telephonic communications (state **1106**) by listening for any CTI events signifying a change in the ongoing telephonic communication.

[**0068**] When the PBX phone associated with the PMIC receives a call, the PMIC receives an incoming-call event **1140** and transitions to a call-routing mode (state **1110**) in which the PMIC consults its routing logic **430**. The routing logic **430** is customized by the user and prescribes the action to be taken in response to an incoming call. In the preferred embodiment, the PMIC is adapted to perform one or more of the following: (1) permit the incoming call to ring at the user PBX phone without intervention, (2) transfer the incoming call to the user's PMIC, (3) transfer the incoming call to another device. e.g., the user's cell phone, (4) transfer the incoming call to another PBX phone, or (5) transmit an instant message to the caller. In the preferred embodiment, the user can define individual call-routing rules that prescribe how to respond to the incoming calls as a function of when the call is received, the telephone number or extension of the caller, the time of day and day of week, and the user's presence-state, for example.

[**0069**] If the routing logic **430** prescribes no action and the call recipient answers the PBX phone, the PMIC receives an off-hook event **1142** from the PBX **110**. The PMIC process **1100** advances to an on-phone presence-state (state **1112**), as illustrated in **FIG. 12A**, as well as a concurrent media session (CMS) setup (state **1114**). The on-phone presence-state (state **1112**) is consistent with the on-phone P-S processing (state **1104**) described above. As illustrated in the CMS setup procedure **1300** of **FIG. 13** associated with the CMS setup (state **1114**), the PMIC uses the extension and or phone number from the off-hook event received (step **1310**) to determine (step **1320**) whether to initiate a media session concurrently with the telephonic communication that began when the phone was answered. A media session as used herein refers to a network-domain dialogue between the caller and call recipient established and maintained separate from the telephonic communication. In the preferred embodiment, the concurrent media session may take one of more of the following four forms: (1) a "message session" such as a SIP instant message, (2) a "text session" such as a SIP text chat session, (3) a "multimedia session" in which a SIP video or audio is exchanged, (4) a document exchange session, or (5) computer GUI interface sharing such as a window-based operating system's "desktop sharing."

[**0070**] Referring again to **FIG. 13**, the CMS testing (step **1330**) is answered in the affirmative if, for example, call recipient's PMIC is configured to automatically attempt to initiate a CMS with all incoming PBX calls, or if the incoming call is from a PBX extension included in a group of one or more numbers pre-selected or otherwise approved by the call recipient. The selection of the type(s) of CMS(s) to be established are determined from user-defined CMS configuration parameters maintained by the call recipient's PMIC handler **434**. A CMS configuration parameter may be set with a default value so that a text chat session or a video session, for example, is automatically established in response to a telephone call. Independent of the initial session type, either user may then manually escalate to a supplemental CMS including document share, screen share mode, or video session, for example. The one or more CMSs are initiated with a session request, e.g., a SIP message, directed from the recipient's PMIC to the caller's PMIC or other SIP conference calling center, e.g., a multi-point control unit known to those skilled in the art. If the session request is accepted with a SIP OK message, the session-request-answered testing (step **1360**) is indicated in the affirmative and the media session launched (step **1370**) between the PMICs of the caller and recipient. In the preferred embodiment, the CMS may be maintained or terminated separate and independent of the telephonic communication. Alternately, the CMS sessions could be terminated with the telephone communication session ended.

[**0071**] Referring again to **FIG. 11**, the PMIC process **1100** proceeds to passively monitor (state **1106**) the network **150** for any events signifying a change in the ongoing telephonic communication. When the phone is hung up, for example, the PBX **110** transmits an on-hook event **1136**, e.g. a CTI message, to the recipient's PMIC that causes the PMIC process **1110** to transition to the off-phone P-S processing (state **1108**). In the off-phone P-S processing of **FIG. 12B**, associated with the phone P-S state **1108**, the PMIC consults (step **1250**) its local subscriber table **432** to identify the call recipient's current presence-state subscribers. If one or more subscribers are identified, the subscriptions testing (step **1260**) is answered in the affirmative and each subscribers sent (step **1270**) an P-S status event, e.g., a SIP message, indicating the availability status of the call recipient immediately prior to going off-hook to answering the call. In an alternate embodiment, the availability status sent to each subscriber is on-line status.

[**0072**] Apart from the monitoring function (state **1106**); the PMIC in some embodiments is also adapted to issue commands to the PBX **110** to alter the telephonic communication involving the associated PBX phone. In the preferred embodiment, the caller may alter the ongoing telephonic communication by taking one of the following actions: (1) terminate the call, (2) place the call on hold, (3) transfer the call, or (4) establish a conference call with one or more additional parties. The user may terminate the call from the PMIC by issuing a terminate command **1162**, e.g. a CTI message, that instructs the PBX **110** to end (state **124**) voice communications with the user' PBX phone. The user may also issue a hold command **1134**A, e.g., a CTI message, to temporarily discontinue the voice communications, after which the PMIC process **1100** resumes passively monitoring (state **1106**) the PBX **110**. An analogous release-hold command **1134**B may be issued by the user from the PMIC to remove the hold and enable voice communication.

[**0073**] Prior to ending the call, the user may also transfer the call from the PBX phone to another device by issuing a transfer command to the PBX **110**. Depending on the identifier—URI, phone number, or extension—the PBX **110** may transfer the call to the user's PMIC, the user's cell

phone, or another PBX extension, for example. When transferred by command **1144** to the user's PMIC, the PMIC process **1100** transitions to the PMIC session setup (state **1116**) in which the PMIC and PBX **110** exchange SIP INVITE and OK messages necessary to establish a VoIP session (state **1118**) to replace the telephonic communication. While in the PMIC VoIP session (state **1118**), the user acting through the PMIC GUI **436** can issue a PBX phone transfer command **1148** to restore the telephonic communication (state **1106**), issue a SIP BYE **1158** message to end the call (state **1124**), or issue an external-device transfer command **1160** causing the PBX **110** to forward (state **1120**) the call to any device specified by the user.

[**0074**] In addition to permitting an incoming call to be answered at the user's PBX phone, the call routing logic **430** may be configured to cause the PMIC in the call routing mode (state **1110**) to automatically respond with one or more of the following actions: (1) transfer an incoming call to the PMIC session setup (state **1116**), transfer or forward the call to an external device (state **1112**), or (3) reply with a message to the caller's PMIC using an Instant Message. In the preferred embodiment, routing logic **430** is configured by the user to direct calls depending on the caller's identification, the time, and the date, for example.

[**0075**] The flow diagrams in **FIGS. 14 through 20** discussed below illustrate various aspects of the PMIC processing **1100** of the preferred embodiment. These figures are provided by way of example and not limitation.

[**0076**] Illustrated in **FIG. 14** is flow diagram depicting the method of distributing telephonic presence-state notices in the PBX system **100**. Prior to configuring a user's PMIC to perform P-S notification, a user generally transmits a registration command to the PBX **110** to associate the user's PMIC with the user's phone extension. This causes the PBX **110** to transmit subsequent event messages pertaining to the user's PBX phone to the user's PMIC. The class of events transmitted by the PBX to a PMIC generally includes, but is not limited to: off-hook plus digits events, off-hook plus extension events, extension-dialed events, transfer events, incoming-call events, and answer events. In the following examples illustrated in **FIG. 14** through **FIG. 20B**, the first user PBX phone **130** is identified by extension number x1234, the first user PMIC **140** identified by URI 1234@proxy.com, the second user PBX phone **131** is identified by extension number x5678, and the second user PMIC **141** identified by URI 5678@proxy.com.

[**0077**] The registration command **1402** causes the PBX **110** to send to the first user's PMIC various CTI events relating to the first user's phone **130**. The registration command **1402** may require that the first user **120** enter a user identifier and password, although other forms of authentication may be implemented. Similarly, the PBX **110** is able to associate CTI commands from this first user's **120** PMIC **140** with the phone **130** extension.

[**0078**] At some later point in time, when the first user **120** picks up the phone **130**, an off-hook signal **1404** is relayed by the PBX **110** to the first user PMIC **140** in the form of an off-hook event, preferably a CTI off-hook message **1406**. Receipt of the CTI event stimulates the PMIC **140** to automatically change the presence-state for the first user to "on-phone" state. As prescribed by the on-phone presence-state processing **1200**, the PMIC **140** consults (method **1200**) its subscriber table **432** and transmits a notify message **1408**, **1410** to all subscribers **121**, **122** by way of the associated PMICs **141**, **142**. The notify message is preferably a SIP on-phone message advertising the change in the first user's telephonic availability.

[**0079**] When the first user completes the call, the on-hook signal **1412** from the first user phone **130** causes the PBX **110** to send the first user's PMIC **140** an on-hook event **1414**, preferably a CTI message. As prescribed by the off-phone present state processing **1250**, the PMIC **140** consults (method **1250**) the subscriber table **430** and notifies all subscribers **141**, **142** of the change in the presence state by way of a SIP notify messages **1416**, **1418**. In the preferred embodiment, the presence state indicated by the SIP notify messages **1416**, **1418** is the presence state that existed just prior to the placement of the call. In an alternative embodiment, the presence state sent when the user goes off-phone may be "on-line" notice. The selection between the two embodiments might be a user-manageable setting.

[**0080**] One skilled in the art will appreciate that the linkage between the PBX phone operation and the presence state is performed entirely within the associated PMIC endpoint itself. Moreover, the presence-state for the user is changed automatically based on receipt of a CTI event without the user manually changing his or her presence state via GUI interaction or other manual input. A principal advantage of this method of presence integration is that it can completely coexist and fully interoperate with all other presence servers, presence collection/distribution servers, and any other SIP proxy servers that might be operational within the network **150**. The proposed method is also highly scalable, since it each PMIC is only responsible for the presence management of its associated user PBX phone.

[**0081**] In some embodiments, the PBX **110** is both the source of CTI events and recipient of CTI commands. One skilled in the art will recognize, however, the a PBX may employ a separate and external CTI server (not shown) that provides fan-out capability, user authentication, and other CTI management tasks, as well as protocol translation between the PBX and the CTI client, for example.

[**0082**] Illustrated in **FIG. 15** is a flow diagram demonstrating the use of a networked intermediate server with which the PBX and one or more PMICs may interoperate. The CTI server **1502** is adapted to relay messages between the PBX **110** and one or more PMICs using CTI and/or eXtensible Markup Language (XML) protocols between the CTI server **1502** and the one or more PMICs **120**, **121**. The proxy server **1502** relays CTI messages between the CTI server **1502** and the PBX **110** using the CSTA CTI protocol, for example. Other protocol translations might also be possible including, but not limited to, HTTP using Get or Post messages via a dedicated IP socket, or SIP using textual information transmitted with SIP MESSAGEs sent between the CTI server **1502** and a PMIC.

[**0083**] As illustrated in **FIG. 15**, a first user PMIC **140** transmits a registration command **1510**, preferably a CTI or XML message, to the CTI server **1502**. The registration command **1510** comprises the extension number of the first user phone **130** and enables the CTI server **1502** to create an association between the first user PBX phone **130** and the first user PMIC **140**. When the first user phone **130** is used to place a call or answer a call, the PBX **110** relays the

off-hook signal **1512** to the CTI server **1502** in the form of a CTI off-hook event **1514**. The server **1502**, in turn, forwards the CTI/XML off-hook event **1516** to the first user PMIC **140**. Reception of CTI off-hook event **1516** stimulates a change in first user's presence state that is propagated to any subscribers via an off-phone notification event **1518**, e.g., a SIP message. Similarly, an on-hook signal **1520** is transmitted to the CTI server **1502** in the form of a CTI on-hook event **1522**, then transmitted to the first user PMIC **140** in the form of CTI/XML off-hook event **1524**. The first user identifies (step **1250**) the presence state subscribers to be sent a SIP notify event **1526**. One skilled in the art will appreciate that the presence state management in the one or more PMICs of **FIG. 14** is functionally equivalent to those in **FIG. 14**, independent of whether the event messages originating from the PBX **110** are sent directly to the PMICs or indirectly via the CTI server **1502**.

[**0084**] Illustrated in **FIG. 16A** is a flow diagram demonstrating the procedure for establishing a first category of CMS between calling parties. In this example, a CMS in the form of a SIP session is automatically initiated between a caller and recipient in the PBX system **100** in response to a telephone call. For purposes of demonstration, let the first user phone **130** have extension number x1234 and the second user phone **131** have extension number x5678. When the first user **120** depresses Dual Tone Multi Frequency (DTMF) keys on the PBX phone **130** to call the second user **130**, an off-hook signal **1602** comprising the call recipient's extension is transmitted to the PBX **110**. In addition to the ring signal **1606** transmitted (step **720**) to the second user's phone **131**, the PBX **110** also generates (step **730**) an extension-dialed event **1604** to the caller's computer, PMIC **140**, as notice that a call has been placed to the extension number x5678. Similarly, the second user's PMIC **141** is notified via the incoming-call event **1608** of the incoming call from extension x1234.

[**0085**] If the incoming call is answered with off-hook signal **1610**, the PBX **110** puts the first user phone **130** and second user phone **131** in telephonic voice communication **1616**. The CTI-enabled PBX **110** also responds to the off-hook signal **1610** with a first call-answered event **1612** transmitted (step **1020**) to the second user's PMIC **141** as well as a second call-answered event **1614** transmitted (step **1040**) to the first user's PMIC **140**.

[**0086**] In response to the first call-answered event **1612**, the second user's PMIC **141** automatically initiates (step **1650**) a media session, preferably a SIP chat session, concurrent with the telephonic voice communication **1616**. The process of initiating (step **1650**) the media session is set forth in greater detail in CMS setup **1114** of **FIG. 13**. In this example, the media session is a SIP session including a simple SIP:MESSAGE message sent from second user's PMIC **141** to the first user's PMIC **140**. In order to generate this SIP message **1620**, in the preferred embodiment, the second user's PMIC **141** derives the SIP URI of the first user's PMIC **140** in accordance with a SIP dial-plan. The dial-plan associates an extension, e.g., abcd, included in an event message with a SIP URI, e.g., SIP:abcd@someproxy.com. In this manner, the second user PMIC **141** extracts the extension number 1234 from the incoming-call event **1608** and generates a SIP MESSAGE transmitted to SIP: 1234@proxy.com. Other suitable dial-plans that allow the call recipient's PMIC to deduce the caller's URI from the calling extension are also possible. For example another dialing plan might associate extension 1234 with SIP:user91234@proxy.com where user 1234's PMIC has this SIP URI.

[**0087**] After the SIP exchange is completed with SIP OK **1622**, SIP text messaging windows are open on both first user's PMIC **140** and second user's PMIC **141**, thereby allowing the first user **120** and second user **121** to text chat with one another concurrent with the voice communication **1616**. One skilled in the art will appreciate that there is no need for the first user **120** or second user **121** to appear on each other's contact lists, nor a need for either user to lookup an IP address or SIP URI. Instead, the SIP session is established automatically based on the PBX call.

[**0088**] Illustrated in **FIG. 16B** is a flow diagram demonstrating a second procedure for establishing a CMS between calling parties. In this example, the various signals, CTI event messages, and SIP messages in **FIG. 16B** are replicated from **FIG. 16A** beginning with the off-hook plus dialed number signal **1602** through the SIP MESSAGE **1620**. Here, however, the presence of the SIP MESSAGE **1620**, and the corresponding SIP: OK, has established a line of communication between first user **120** and second user **121** that may be exploited to open additional forms of communication. After the SIP session signified by SIP MESSAGE **1620** has been between established, either the first user **120** or the second user **121** may escalate the interaction to other forms of supplemental CMS using built-in capabilities of RTC, for example. In the preferred embodiment, either call participant may establish a supplemental CMS, e.g., a document exchange or a screen sharing session, that runs in parallel to the SIP:MESSAGE **1620**. The supplemental CMS **1624** may be manually selected (step **1652**) by a user via the user's PMIC GUI **436** or other form of selection input device.

[**0089**] Illustrated in **FIG. 16C** is a flow diagram demonstrating a third procedure for establishing a CMS between calling parties. Here, the various signals, CTI event messages, and SIP messages are replicated from **FIG. 16A** beginning with the off-hook plus dialed number signal **1602** through the SIP MESSAGE **1620**. In this example, the first user **120** and second user **121** have desktop video cameras used by the CMS handler **434** of each user's PMIC **140**, **141** to automatically setup (step **1654**) a supplemental CMS such as video session **1626** with the primary CMS session **1620**. The call recipient's CMS handler **434** automatically issues an additional SIP INVITE containing video session description protocol (SDP) information. In the preferred embodiment, the video session is a user-manageable setting, thereby allowing a call recipient to configure the CMS handler **434** to: (1) automatically enable and start the camera for every call, (2) fully disable the camera to prevent the camera from starting, (3) manual enable the camera to start at the discretion of the user, or (4) selectively enable the camera to start depending on the caller identification, i.e., caller ID.

[**0090**] As illustrated in more detail below, the integration of a CTI client capability into a PMIC permits the user to execute standard telephone set control functions from the individual's computer. In the preferred embodiment, the PMIC is adapted to transmit PBX call control commands including, but not limited to, make-call commands to initiate a call, answer-call commands to accept an incoming call,

hold-call commands to temporarily pause an on-going call at the PBX, transfer-call commands to redirect a call between the PBX phone and user PMIC or other device, conference-call commands to establish a call with three or more parties, and forward-call commands to direct a call to a device specified by the user.

[0091] Illustrated in **FIG. 17** is a flow diagram demonstrating a PBX-supported call initiated from a PMIC. First, the user enters a destination telephone number into the user's PMIC GUI and activates a make-call routine in the PMIC controller. The PMIC issues a make-call command **1702** that causes the PBX **110** to issue a ring signal **1704** to the user's phone **130**. After the handset is picked up and an off-hook signal **1706** transmitted, the PBX **110** places the call to the destination number corresponding to second user phone **131**, for example, via a ring signal **1708**. When the second user phone **131** is answered and an off-hook signal **1710** transmitted, the parties are enabled for telephonic voice communications **1712**, **1714**. In another embodiment, the caller's PBX phone **130** automatically enters a hands-free speakerphone mode and the recipient called immediately after the destination number is entered at the PMIC **140**.

[0092] Illustrated in **FIG. 18A** and **FIG. 18B** are flow diagrams demonstrating an on-going communications being transferred between a user PBX phone and the associated PMIC. In this embodiment, the PMIC is adapted to inter-operate with a PBX **110** enabled with SIP or other VoIP protocol in addition to CTI client functionality. This PBX system, referred to as a SIP-PBX, has native SIP capabilities including the ability to make and receive SIP voice calls.

[0093] As illustrated in **FIG. 18A**, an enterprise worker may transfer an on-going call on the PBX phone to the user's PMIC. At any time during a telephonic voice conversation **1802**, **1804** between the first user phone **130** and the second user phone **131**, a user may transfer the call from to his or her PMIC **141** by issuing a PMIC transfer command **1806**, preferably a CTI message, comprising the identifier of the device to which to transfer the call. In the case of a PMIC **141** enabled with a SIP user agent, the transfer command **1806** may include the SIP URI used by the PBX **110** to execute a call transfer to the PMIC SIP voice client. When the SIP INVITE **1808** to 5678@proxy.com is accepted by the PMIC **141** by means of a SIP OK message **1810**, the PBX **110** bridges the first leg of the conversation **1814** with the first user phone **130** in the PDSV domain with the second leg of the conversation **1816** with the second user PMIC **131** in the SIP domain. In the preferred embodiment, the SIP URI is derived from extension number of the user phone with which it is associated.

[0094] As illustrated in **FIG. 18B**, the second user **121** may at any time transfer the SIP domain call **1816** directed to the second user PMIC **141** back to the second user PBX phone **141** A PBX phone transfer command **1818**, e.g. a CTI message, comprising the 110 second user's phone extension, number x5678, is issued by the second PMIC **141** to the PBX **110**. Upon receipt, the PBX **110** terminates the SIP session with a SIP BYE message **1820** and enables the PDSV voice communication **1826** between the PBX **110** and the second user phone **131**.

[0095] As illustrated in **FIG. 19**, a PMIC may also be used to answer an incoming call destined to a PBX phone independently of the user's PBX phone. In response to an incoming call **1902**, the PBX **110** in the preferred embodiment transmits a ring signal **1906** an incoming-call event **1908**, e.g. a CTI message, to the call recipient's PMIC **141**. The second user **121** may then click an answered button in the PMIC GUI causing it to issue an answer command **1910** and transfer command **1912**. The transfer command **1912** comprises the identification of the device to which the call is to be forwarded. The identification of the PMIC **141** is the SIP URI, SIP:5678@proxy.com. In response, the PBX **110** issues a SIP INVITE message **1914**, to which the PMIC **141** automatically responds with a SIP OK message **1916**. The subsequent conversation between the caller **120** and recipient **121** includes PDSV domain voice **1920** between the caller **120** and SIP PBX **110**, and SIP domain VoIP **1922** between the SIP PBX **110** and recipient's PMIC **141**.

[0096] Illustrated in **FIG. 20A** and **FIG. 20B** are flow diagrams demonstrating an incoming call to a PBX phone being automatically processes by an associated PMIC without user intervention. In **FIG. 20A**, the PMIC answers an incoming call to a user's PBX phone and then forwards the call to another device previously specified by the user.

[0097] In response to an incoming call **2002**, the PBX **110** in the preferred embodiment transmits ring signal **2006** to the second user phone **131** and an incoming-call event **2008** to the call recipient's PMIC **141**. Upon receipt of the incoming-call event **2008**, the second user PMIC **141** implements call routing processing (state **1110**) that dictates how this call is to be treated. If the call routing logic **430** of **FIG. 4B** indicates that the call should be transferred to another device, the second user PMIC **141** issues an answer-call command **2010** preventing the PBX **110** from forwarding the call in accordance with its no-answer procedure, e.g. voice mail **206**. The second user PMIC **141** also issues to the PBX **110** a call-transfer command **2012** identifying the destination device to which the call is to be forwarded, e.g., device ABCD. The destination device may be another PBX extension, a PSTN telephone, or a SIP user agent.

[0098] The call routing logic **430** in the preferred embodiment comprises user-managed preferences include forwarding criteria and the action to be taken when the forwarding criteria are satisfied. These criteria may include the phone number or extension of the calling party and the time-of-day and date, for example. The call routing logic **430** may dictate that (1) on Wednesday evenings the call should be answered and transferred to PBX phone extension number x6789, on (2) Thursday evenings the call should be answered and transferred to John@acme.com, and (3) at all other times, the call is not answered by the PMIC, thereby allowing the PBX **110** to automatically forward to call voicemail **206** if not answered.

[0099] The call routing logic **430** in some embodiments may also depend on the presence state of its user. For example, if a user's presence state is set to "away," determined either via manual operation or automatically in the absence of keyboard activity for a period of time, the call routing logic **430** may be configured to forward to an incoming call to the extension of an administrative assistance. Similarly, an incoming call might be directed to the SIP user agent of another enterprise colleague selected by the user, thereby providing an alternative point of contact while the user is unavailable or out of the office. In the

preferred embodiment, the call routing logic **430** is in the form of a script created by the user, although it may also be configured via a graphical and or menu-based interface on the PMIC GUI **436**.

[**0100**] The call routing logic **430** of a PMIC in some embodiments also includes the SIP text messaging and document transfer capabilities as part of the call treatment for incoming and outgoing calls at the PBX phone. Illustrated in **FIG. 20B** is a flow diagram demonstrating an instant message being transmitted by a PMIC in response to an incoming call. The PBX **110** responds to incoming call **2002** with ring signal **2006** and an incoming-call event **2008** sent to the call recipient's PMIC **141**. Upon receipt of the incoming-call event **2008**, the second user PMIC **141** implements call routing processing **1110** that dictates how this call is to be treated. When configured accordingly, the second user's PMIC **141** transmits an instant message **2020** from the user's PMIC to the caller's PMIC **140**. The caller's SIP URI, SIP: 1234@proxy.com, is derived from the caller's extension, number x1234, learned by the second user's PMIC **141** from the preceding incoming call event **2008**.

[**0101**] The instant message may include a standardized greeting or a customized Instant Message including information specifically intended for the caller about. A person may, for example, generate a personal message including the anticipated return time or an alternate contact number. Similarly, the call routing logic **430** in some embodiments is adapted to transmit a document that may contain text, graphics, spreadsheet, or other information of interest to the caller in response to an incoming call directed to a specific PBX extension.

[**0102**] After the instant message **2020**, the incoming call may further processed in any number of ways defined by the call routing logic **430**. In this example, the second PMIC **141** causes the PBX **110** to transfer the incoming call to device ABCD using transfer command **2022**.

[**0103**] In some embodiments, the caller's PMIC may also be configured to respond to the call recipient's instant message with another instant message sent to the call recipient's PMIC **141**. For example, when the second user **121** receives a telephone call from extension number x1234, the call routing logic **432** generates the appropriate URI and sends an instant message to SIP:SecondUser@pda.com to inform the second user **121** that the first user phone **131**, i.e., extension number x1234, had called. The call routing logic **430** may be tailored to inform a call recipient of the call and the time of the call.

[**0104**] The call routing logic **430** may also be configured to automatically send an instant message when an outbound call is placed from the PBX phone associated PMIC. A specific SIP emergency message, for example, may be sent to a pre-selected SIP user when the Emergency **911** number is dialed.

[**0105**] Illustrated in **FIG. 21** is a functional block diagram of a user PMIC with a plurality of selectable SIP user agents. In addition to Microsoft's RTC SIP client **424** and a CTI client **420** discussed above, a PMIC **2100** may further include one or more additional SIP instant messaging applications such as a SAMETIME client **2102** by IBM Lotus Corp. and/or any other commercial SIP User Agent Client The user may select one of the plurality of SIP client via PMIC GUI **436**, for example, by entering a user-selectable parameter causing the SIP/IM selection module **2110** to use the selected SIP client for subsequent IM exchanges. To aid in the selection, the various features supported by each individual SIP client may be indicated as present or not present, or selectable and non-selectable. As with other GUIs, the features that are not present in a particular client may be indicated by representing the feature in greyed-out text or icon form. To the degree that two or more SIP clients support common functionality, in the preferred embodiment the user experience is identical and independent of the SIP client selected.

[**0106**] Illustrated in **FIG. 22** is a CTI server with which the present invention may be made to interoperate with one of a plurality of different types of PBX systems. The CTI server **2200** in this embodiment comprises a plurality of PBX interfaces from which the network administrator may choose. Using the PBX selection **2208**, for example, the system administrator may configure the CTI server **2200** to use either PBX-A interface **2202**, PBX-B interface **2204**, or PBX-C interface **2206**, depending on the hardware and vendor requirements of the PBX **110**. CTI server **2200** capable of communicating with multiple types of PBXs using a single common CTI interface **2210** protocol to/from a CTI client are available from Genesys Telecommunications Laboratories, Inc. of San Fransisco, Calif., for example. In this manner, the PMIC is generally able to provide the functionality of the several embodiments in a manner independent of the type PBX system or vendor.

[**0107**] Although the description above contains many specifications, these should not be construed as limiting the scope of the invention but as merely providing illustrations of some of the presently preferred embodiments of this invention.

[**0108**] Therefore, the invention has been disclosed by way of example and not limitation, and reference should be made to the following claims to determine the scope of the present invention.

I claim:

1. A call transfer method for a first computer interface operatively coupled to a system comprising a private branch exchange (PBX) and a first PBX phone, the call transfer method comprising the steps of:

transmitting to the PBX a first message for transferring a telephone call associated with the first PBX phone;

establishing a voice-over-IP session between the PBX and the first computer interface; and

replacing the telephone call to first PBX phone with a call to the first computer interface via the voice-over-IP session.

2. The call transfer method of claim 1, wherein the first message is a CTI event message.

3. The call transfer method of claim 1, wherein the first message comprises a universal resource identifier associated with the first computer interface.

4. The call transfer method of claim 1, wherein the step of establishing a voice-over-IP session comprises the steps of:

receiving a voice-over-IP session request message from the PBX; and

transmitting a voice-over-IP session acceptance message.

5. The call transfer method of claim 4, wherein the session request message is an SIP INVITE message and the session acceptance message is an SIP OK message.

6. A call transfer method for a first computer interface operatively coupled to a system comprising a private branch exchange (PBX) and a first PBX phone, the call transfer method comprising the steps of:

transmitting to the PBX a first message for transferring a voice-over-IP session associated with the first computer interface and PBX; and

establishing a telephone call associated with the first PBX phone; and

terminating the voice-over-IP session between the PBX and the first computer interface.

7. The call transfer method of claim 6, wherein the first message is a CTI event message.

8. The call transfer method of claim 6, wherein the first message comprises an extension number associated with the first PBX phone.

9. The call transfer method of claim 6, wherein the step of establishing the voice-over-IP session comprises the step of transmitting a private digital signals and voice (PDSV) signal to the first PBX phone.

* * * * *