March 13, 1951 B. R. COUPLAND ET AL 2,545,021

DRUM HANDLING DEVICE FOR LIFT TRUCKS

Filed April 5, 1948

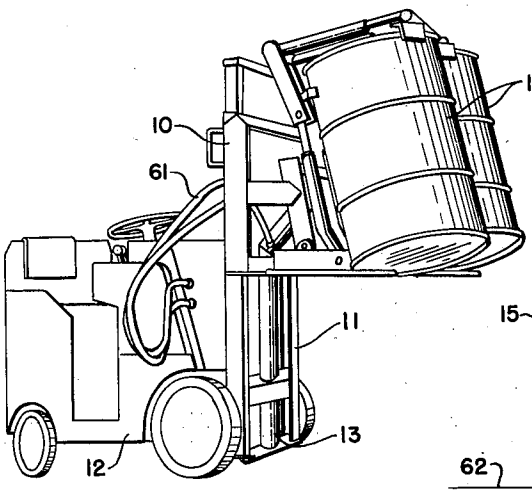

FIG. 1

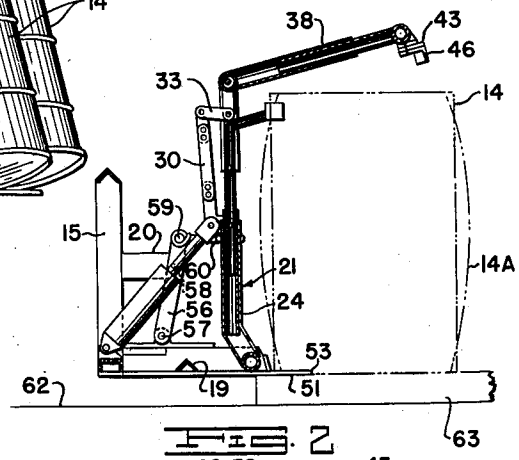

FIG. 2

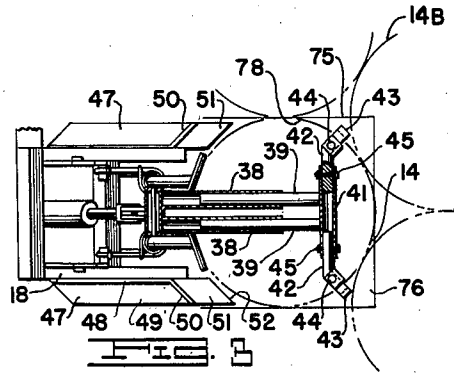

FIG. 3

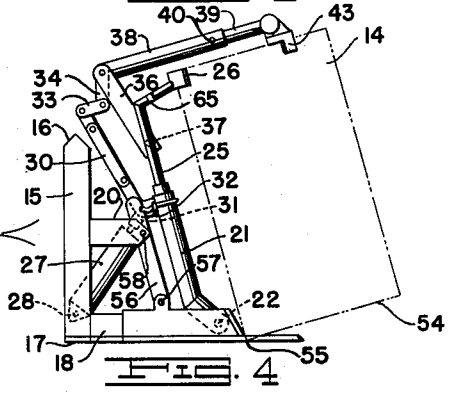

FIG. 4

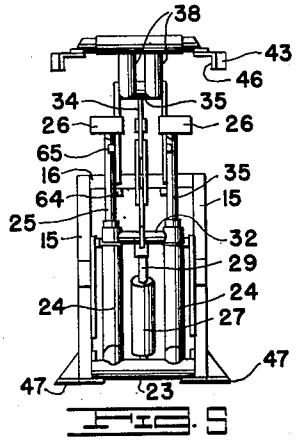

FIG. 5

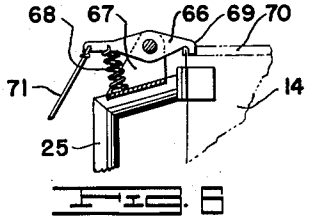

FIG. 6

INVENTORS
BERTRAM R. COUPLAND
HAROLD J. BLACK

BY Lyon & Lyon

ATTORNEYS

Patented Mar. 13, 1951 2,545,021

UNITED STATES PATENT OFFICE

2,545,021

DRUM HANDLING DEVICE FOR LIFT TRUCKS

Bertram R. Coupland and Harold J. Black,
Los Angeles, Calif.

Application April 5, 1948, Serial No. 18,916

8 Claims. (Cl. 214—66)

1

This invention relates to materials handling equipment and is particularly directed to improvements in devices for lifting, maneuvering, carrying and depositing such items as drums, barrels, hogsheads, reels, cylindrical containers, bulk goods in cylindrical form, and the like. This invention finds particular usefulness in connection with materials handling lift trucks now in common use.

Cylindrical containers such as, for example, oil drums, are commonly loaded in boxcars or trucks for shipment or stacked in rows in warehouses. So far as we are aware there has not been developed any satisfactory method or apparatus for mechanically handling such drums. The movement of drums from one place to another for loading, shipping, warehousing, or for any other purpose commonly entails a great deal of manual effort. When loaded drums are to be stacked two-high in nesting rows in a boxcar, for example, a great deal of manual manipulation is required to spot the drums in the right place in order to avoid shifting during transportation. Manually operable two-wheel trucks now in common use for handling drums and the like provide a toe or ledge on which the lower end of the drum may rest while the drum is tilted back on the body of the device. When such a device is used it is first necessary to tilt the particular drum away from the toe or ledge in order that it may be inserted under the lower portion of the drum. Such tilting action is not possible if the drum is positioned against a wall or against an adjacent drum in another row. Accordingly, the drum must be first manually withdrawn from nested position before it may be tilted for positioning of the toe or ledge.

In accordance with our invention we provide improved apparatus adapted to be carried on a standard lift truck and embodying certain novel features of design enabling the device to perform the various operations mechanically without requiring any manual assistance, the device being under the control of the operator of the lift truck.

It is the principal object of our invention to provide apparatus for mechanically handling drums, barrels, cylindrical containers and the like in order to avoid the requirement of manual manipulation.

Another object is to provide handling apparatus of this type including a frame adapted to be carried on a lift truck, together with means on the frame for tilting the drum toward the frame in order to provide side clearance at the lower end of the drum into which lifting shoes may be projected from the frame.

2

Another object is to provide a device of this type which is hydraulically operated from power on the lift truck.

Another object is to provide a device of this type which is operable to stack drums or the like two-high and to deposit or remove drums from either level without moving adjacent drums positioned in the same or adjacent rows.

Another object is to provide a device of this type which is particularly adapted for handling drums mounted on shipping pallets, whereby the device may be capable of reaching a drum mounted in any one of four positions on the pallet.

Another object is to provide a device of this type which is capable of economical manufacture in quantity lots and which is universally adaptable to handle containers of various sizes and shapes.

Other objects and advantages will appear hereinafter.

In the drawings:

Figure 1 is a perspective view of a preferred embodiment of our invention showing a pair of lifting devices in elevated position on a conventional form of lift truck.

Figure 2 is a side elevation partly in section of one of the lifting devices and illustrating its cooperative relationship with a drum or barrel mounted on a pallet.

Figure 3 is a plan view of the device shown in Figure 2, certain parts being in section.

Figure 4 is a side elevation with the drum shown in tilted position.

Figure 5 is a front elevation showing the position of the parts as shown in Figure 2.

Figure 6 is a fragmentary view illustrating a modified form of our invention.

Referring to the drawings, the frame generally designated 10 is adapted to be carried by any conventional means on the forward portion 11 of a conventional lift truck 12. Power means including the hydraulic cylinder 13 serves to raise and lower the frame 10 relative to the truck 12 under the control of the truck operator. As shown in Figure 1 a pair of frames 10 may be carried on the same lift truck 12 and mounted in side by side relationship for simultaneously handling two drums 14, the frames 10 being raised and lowered as a unit.

We prefer to describe our invention in connection with the handling of oil drums 14, but it will be readily understood that barrels, hogsheads, reels, and other cylindrical or barrel-shaped bulk goods may be likewise handled by the apparatus embodying our invention.

Each of the frames 10 may include a pair of

laterally spaced posts 15 connected at their upper ends by a horizontal crossbar 16 and at their lower ends by a horizontal footing 17. Forwardly projecting side members 18 extend from the posts 15, and a transverse stiffener 19 serves to connect the side members 18. The frame may also include forwardly extending struts 20 carried on the posts 15 at a position intermediate their ends. The members 15, 16, 17, 18, 19, and 20 comprising the frame 10 may be secured together in any convenient fashion, such as by welding.

An upright tilting member generally designated 21 is mounted for pivotal movement about a horizontal axis 22 on the forward end of the frame side members 18. The member 21 may include a sleeve 23 to which are welded the spaced parallel uprights 24. The uprights 24 may be tubular in form and adapted to receive in telescopic relation the extensions 25 projecting therefrom. The purpose of the telescopic relationship between the parts 24 and 25 is to permit adjustment in length of the upright tilting member 21. A stop pad 26 may be provided at the upper end of each of the members 25. These stop pads 26 may be adjustably mounted on the upper ends of the tubular rods 25 if desired in order to conform substantially to the outer surface of the particular size drum 14 to be handled.

Means are provided for securing the rods 25 with respect to the tubular members 24 at any selected position in order to position the pads 26 at the proper elevation with respect to the drum 14. Means are provided for tilting the member 21. The tilting of the member 21 may be accomplished manually through a system of levers or block and tackle by the operator on the lift truck, but we prefer to provide a hydraulic power cylinder assembly 27 for accomplishing this purpose. The assembly 27 may be pivotally secured to the frame 10 by means of the pivot pin 28, and the piston rod 29 extending from the assembly may be pivotally connected to the bell crank 30 by means of the connecting pin 31. The short arm of the bell crank 30 is pivotally mounted on the crossbar 32 extending between the tubular members 24 near the upper ends thereof.

In certain embodiments of our invention it may be preferable or desirable to connect the power cylinder assembly directly to the tilting member 21 rather than to the bell crank 30, as will appear more fully hereinafter. The long arm of the bell crank 30 is pivotally connected to a link 33 which is in turn pivotally connected to the lower end of the crank arm 34. The crank arm 34 may be joined as by welding to the sleeve 35 pivotally carried on the parallel supporting bars 36. The supporting bars 36 are pivotally connected to the tubular rods 25 by means of the pivot pins 37. Projecting forwardly from the sleeve 35 is a pair of reach bars 38 adapted to extend over a portion of the upper end of the drum 14. The long arm of the bell crank 30 may be varied in length to conform to the relative position of the tubular rods 25 and the members 24, and this variation in length may be accomplished by forming the said long arm of a plurality of elements relatively adjustable for length. The reach bars 38 may be made adjustable in length by means of the telescopic connection between the tubular rods 39 and the receiving bars 38. Suitable means such as the pins 40 may be provided for maintaining the rods 39 and tubular bars 38 in adjusted position.

The forward ends of the elements 39 are welded to a transverse sleeve 41. Tubular supporting elements 42 are received in telescopic relation in opposite ends of the sleeve 41, and these elements 42 are pivotally connected to drum contacting fingers 43 by means of the pivot bolts 44. The elements 42 may be adjusted relative to the sleeve 41 by sliding in or out, and pins 45 are provided for securing the elements 42 in adjusted position. It will be understood that the purpose of the length adjustment of the reach bars 38 and the width adjustment of the supporting elements 42 is to enable the device to conform to drums of various sizes.

Each of the fingers 43 is provided with a downwardly extending flange 46 which is adapted to engage the outer surface of the drum 14. The position of the fingers 43 and flanges 46 with regard to the circumference of the drum 14 is important, since the fingers and flanges must not offer interference to drums which may be positioned adjacent the particular drum to be lifted. Thus, as shown in Figure 3, the fingers 43 and their flanges 46 engage those portions of the periphery of the drum 14 which lie between the points of tangency with similar drums positioned in nested relation with respect to the drum 14 to be lifted. It will be further understood that if the rows of drums are not nested but if each drum is directly behind the drum in the adjacent row, the fingers 43 still do not offer any interference with regard to neighboring drums, but on the contrary operate in clearance space. Hence the fingers 43 offer no interference with neighboring drums, whether the drum rows are nested or not. Furthermore, the location of the fingers 43 is such as to avoid interference with walls, such as the corner walls of a boxcar, when the drum is being deposited or lifted from such a corner. As shown in Figure 3, the corner walls indicated by the dot and dash lines 75 and 76 offer no interference to the fingers 43. It will be noted that each finger 43 is positioned in a clearance zone designated 77. One side of this zone is formed by the wall 75, a second side by the arc 78 of the drum 14, and a third side by the arc 79 of the adjacent drum 14b.

A sliding shoe 47 is positioned on each side of the frame 10 adjacent the side members 18. These shoes 47 may be formed of angle sections and slidably mounted on the side members 18 in any convenient manner. The upwardly extending leg 48 on each of the sliding shoes 47 may be split away from the lower horizontal portion 49 at its forward end and bent to the angular position shown at 50. The forward projecting end 51 on each of the sliding shoes 47 is therefore horizontal and has no vertical flange. The extreme forward end of the projections 51 may be slanted at an angle as shown at 52 and may be beveled as shown at 53. When the drum 14 is tilted rearwardly as shown in Figure 4, clearance space is developed beneath the lower circular end 54 of the barrel on opposite sides of the tilting point 55. The sliding shoes 47 accordingly may be moved into this clearance space to a position under a portion of the lower end 54. The shoes are shown in this position in Figure 1.

Means are provided for sliding the shoes forwardly in response to rearward tilting movement of the drum 14, and as shown in the drawings this means includes a pair of levers 56 each connected to one of the sliding shoes 47 by means of a pivot pin 57. Each lever 56 is pivotally supported by a fulcrum pin 58 carried at the

inner end of the frame struts 20. As shown clearly in Figure 2, a boss 59 is provided on the upper end of the lever 56, and this boss is in position to be contacted by one of the tubular pieces 24 on the tilting member 21 when the latter is tilted rearwardly toward the frame posts 15. Accordingly, when the tilting member 21 approaches the limit of its travel toward the posts 15, the tubular pieces 24 engage the bosses 59 on the levers 56. Pivotal movement of the levers 56 about the pins 58 occurs in a counter-clockwise direction, as viewed in Figures 2 and 4, and the sliding shoes 47 are accordingly thrust under the lower end of the tilted drum 14. It will be understood that the pivotal connections 57 and 58 are provided with sufficient clearance to enable the shoes 47 to slide freely on the side members 18.

Retraction of the sliding shoes 47 may be accomplished by any suitable form of lost motion connection between the member 21 and the upper portions of the levers 56, but we prefer to provide cables 60 which function when in tension to retract the sliding shoes 47 and which are ineffective to advance the shoes toward the lower end of the drum 14.

In operation the various adjustments provided for adapting the tilting member, reach bars, etc. to accommodate the particular size drum or other container to be handled are first made, and one or more of the lifting devices are mounted on the lift truck 12. The hydraulic connections 61 extending from a hydraulic power cylinder 27 are connected to the hydraulic system of the truck so that the truck operator may raise and lower the lifting assemblies as well as control the actuation of the tilting mechanism. The operator then rolls the truck to a position adjacent a drum 14 to be handled. The drum may be of general cylindrical shape or may be barrel-shaped, as indicated by the dot and dash line 14*a* as shown in Figure 2.

The drum 14 may be resting on the floor 62, on the pallet 63, or on top of another drum. The operator may prefer to handle one drum at a time or two drums simultaneously. In the latter event, the truck 12 is positioned adjacent the drums so that each is directly in advance of the frames 10 and directly below the reach arms 38 of each lifting assembly. The truck 12 is rolled forwardly until the pads 26 strike the upper cylindrical surface of the drum 14. The reach bars 38 are then lowered from the position shown in Figure 2 to a substantially horizontal position in which the flanges 46 on the fingers 43 engage the outer cylindrical surface of the drum 14. This lowering of the reach bars 38 is accomplished by retracting the piston rod 29 into the power cylinder 27. The initial movement of the rod 29 serves to pivot the bell crank 30 about its supporting pin 32 and thereby move the long arm of the crank in a direction to tension the link 33. The crank arm 34 accordingly is rotated in a clockwise direction as viewed in Figure 4 to move the reach bars downwardly toward horizontal position. Tilting movement of the parallel supporting bars 36 is limited by means of the stops 64 and 65 carried on the tilting member 21.

The downwardly projecting flanges 46 on the fingers 43 engage the circumference of the drum 14, and continued retraction of the piston rod 29 then effects tilting movement of the member 21 and causes the drum 14 to tilt about its pivot point 55, which is a point on the circumference of the lower end 54 adjacent the member 21. As the piston rod 29 moves into the cylinder 27, tilting movement of the member 21 and drum 14 continues. When the bosses 59 on the upper ends of the levers 56 are engaged by the tilting member 21, the sliding shoes 47 are projected forwardly under the clearance made available under the lower end 54 of the drum 14 on opposite sides of the tilting point 55. Figure 4 shows the parts of the mechanism in this position. The drum 14 may be lifted by elevating the frame 10 relative to the truck 12. The same sequence of operations may be carried out for tilting and lifting the other drum 14 carried on the adjacent lifting frame 10. The operator may then back the truck away from the location where the drums were lifted and may carry them to any desired location. The two drums 14 may be deposited on a pallet or on the floor or on top of a row of similar drums. It will be noted in Figure 3 that the drum 14 projects laterally beyond the extreme width of the carrying device. This enables the carrying devices to lift adjoining drums from a row without disturbing other drums in the same row.

When a drum 14 is to be deposited, the operator manipulates a hydraulic valve (not shown) on the truck to cause the power cylinder 27 to advance the piston 29 and hence return the tilting member 21 toward an upright position. The drum 14 is spotted over the desired location, and upon return of the tilting member 21 toward upright position the drum 14 is returned to upright position to rest on the lower end 54. As the tilting member 21 turns in a clockwise direction as viewed in Figure 4, the cables 60 become taut and serve to pivot the levers 56 in a counter-clockwise direction to retract the sliding shoes 47. The piston rod 29 continues to move outwardly from the cylinder 27 after the drum 14 reaches an upright position in order to raise the reach bars 38 and fingers 43 upwardly to the position illustrated in Figure 2. The truck 12, frames 10 and associated mechanism may then be withdrawn.

In a modified form of our apparatus the reach bars 38 may be dispensed with and instead a chine latch employed for holding the drum 14 in contact with the circumferentially spaced pads 26. This chine latch is shown in Figure 6 of the drawings and is identified as 66. The latch may be pivotally mounted on plates 67 secured on the upper ends of the tubular rods 25. A compression spring 68 may be provided for maintaining the nose 69 of the latch against the chine 70 of the drum 14. A cable 71 may be used to compress the spring and to release the latch 66 from the chine 70 when desired. When the chine latch 66 is used instead of the reach bars 38 the bell crank 30 is not used, and instead the clevis on the end of the piston rod 29 is pivotally connected directly to the tilting member 21.

Drum handling devices constructed in accordance with our invention have been found to possess outstanding advantages in connection with eliminating all manual handling of drums during loading, stacking and unloading operations. Marked savings in loading and unloading time are effected. With two of the devices mounted on a single lift truck, two drums may be simultaneously lifted from a floor, shipping dock, loaded pallet or from tiered drum stacks. Any one or two drums may be selected out of the middle of a row. The truck operator can accurately place and deposit the drum load into freight cars or trucks against a wall or in a corner. Drums may

be stacked on end to a height limited only by the available lift of the truck. Furthermore, the over-reach provided by the frame members 18 is well suited for de-palletizing, since four drums such as, for example, conventional oil drums, may be picked up from any one side of a standard four-foot square pallet.

Having fully described our invention, it is to be understood that we do not wish to be limited to the details herein set forth, but our invention is of the full scope of the appended claims.

We claim:

1. In a handling device for upright drums, barrels, or the like, the combination of a frame adapted to be carried by a lift truck; an upright tiltable member mounted on the frame for pivotal movement about a horizontal axis; drum contacting elements on said member; releasable means movably mounted on the upright member adapted to maintain the drum in contact with said elements; means carried on the frame adapted to tilt the said member and thereby tilt the drum rearwardly about a tilting point on the circumference of its lower end adjacent said member, the said tilting movement of the drum forming clearance spaces on each side of the tilting point beneath the lower end of the drum; supporting shoes movably mounted on the frame; and means responsive to pivotal movement of said member adapted to project said supporting shoes forwardly under the lower end of the drum into the clearance spaces on opposite sides of said tilting point.

2. In a handling device for drums, barrels, or the like, adapted to rest upright on a level surface, the combination of a frame; an upright tiltable member mounted on the frame for pivotal movement about a horizontal axis; drum contacting means mounted on said member; releasable means movably mounted on the upright member adapted to maintain the drum in contact with said contacting means; power means carried on the frame adapted to tilt the said member and thereby tilt the drum rearwardly about a point on the circumference of its lower end adjacent said member; supporting shoes movably mounted on the frame; and means adapted to project said supporting shoes into clearance space between the level surface and the lower lateral portions of the lower end of the drum when in tilted position.

3. In a handling device for upright containers having spaced parallel circular ends, the combination of a frame; an upright tiltable member mounted on the frame for pivotal movement about a horizontal axis; container contacting pads mounted on said member above said pivotal axis; releasable means movably mounted on the upright member adapted to maintain the container in contact with said pads; power means carried on the frame adapted to tilt the said member and thereby tilt the container about a point on the circumference of its lower end adjacent said member, the said tilting movement of the container forming clearance spaces on each side of the tilting point beneath the lower end of the container; supporting shoes movably mounted on the frame; and means responsive to pivotal movement of said member adapted to project said supporting shoes into said clearance spaces under the lower lateral edges of the lower end of the container when in tilted position.

4. In a handling device for containers having a circular end adapted to rest on a level surface, the combination of a frame adapted to be carried on a lift truck; an upright tiltable member mounted on the frame for pivotal movement about a horizontal axis; container contacting pads mounted on said member; a reach element supported on the upright member adapted to extend forwardly over the upper portion of the container; laterally spaced fingers carried on the reach element adapted to engage the container at circumferentially spaced points on the exterior surface thereof for maintaining the container in contact with said pads; means carried on the frame adapted to bring the reach element and spaced fingers into operative position, said means also acting to tilt the said member and thereby tilt the container about a tilting point on the circumference of its lower end adjacent said member; supporting shoes movably mounted on the frame; and means adapted to project said supporting shoes forwardly under the lower lateral edges of the lower end of the container when in tilted position.

5. In a handling device for upright containers having spaced parallel circular ends, the combination of a frame adapted to be carried on a lift truck; an upright tiltable member mounted on the frame for tilting movement about the lower forward portion of the frame; container contacting pads mounted on the upper portion of said member; a reach element supported on the upright member adapted to extend forwardly over the upper portion of the container; laterally spaced fingers carried on the reach element adapted to engage the container at circumferentially spaced points on the exterior surface thereof for maintaining the container in contact with said pads; power means carried on the frame adapted to tilt the said member rearwardly and thereby tilt the container about a point on the circumference of its lower end; supporting shoes movably mounted on the frame; and means responsive to pivotal movement of said member adapted to project said supporting shoes forwardly under the lower lateral edges of the lower end of the container.

6. In a handling device for upright containers having spaced parallel circular ends, the combination of a frame; an upright tiltable member mounted on the frame for pivotal movement about a horizontal axis; container contacting pads mounted on said member; a reach element supported on the upright member adapted to extend forwardly over the upper portion of the container; laterally spaced fingers carried on the reach element adapted to engage the container at circumferentially spaced points on the exterior surface thereof for maintaining the container in contact with said pads; hydraulic power means carried on the frame adapted to bring the reach element and spaced fingers into operative position, said power means also acting to tilt the said member and thereby tilt the container about a point on the circumference of its lower end; supporting shoes movably mounted on the frame; and means responsive to pivotal movement of said member adapted to project said supporting shoes forwardly under the lower lateral edges of the lower end of the container when in tilted position.

7. In a handling device for upright containers having spaced parallel circular ends, the combination of a frame adapted to be carried on a lift truck; an upright tiltable member mounted on the frame for tilting movement about the lower forward portion of the frame; releasable means for securing the upper portion of the container

to the tilting member; power means carried on the frame adapted to tilt the said member rearwardly and thereby tilt the container about a point on the circumference of its lower end; supporting shoes movably mounted on the frame; and means responsive to pivotal movement of said member adapted to project said supporting shoes forwardly under the lower lateral edges of the lower end of the container.

8. In a device for handling upright substantially cylindrical containers, the combination of a frame adapted to be carried upon a lift truck; means on the frame adapted to tilt a first container, said means including a reach element extending diametrically over a portion of the upper end of the container; a pair of fingers symmetrically mounted on the reach element adapted to engage the cylindrical surface of the container at circumferentially spaced locations, each of the fingers being positioned in a clearance zone bounded on two sides by arcs of the curved surfaces of said first container and a like container positioned in an adjacent row in nested relation and on the third side by a plane surface tangent

to the first container, said plane surface being parallel to the plane defined by the tilting movement of the longitudinal axis of the first container.

BERTRAM R. COUPLAND.
HAROLD J. BLACK.

REFERENCES CITED

The following references are of record in the file of this patent:

UNITED STATES PATENTS

Number	Name	Date
1,439,228	Cochran	Dec. 19, 1922
1,827,209	Robbins	Oct. 13, 1931
1,843,735	Remde	Feb. 2, 1932
1,895,640	Norling	Jan. 31, 1933
1,900,569	Lederer	Mar. 7, 1933
1,929,447	Remde	Oct. 10, 1933
2,272,447	Traxel	Feb. 10, 1942
2,329,439	Hanssen	Sept. 14, 1943
2,447,300	Williams	Aug. 17, 1948
2,469,812	Breslav	May 10, 1949
2,519,067	Rich	Aug. 15, 1950