March 3, 1931. W. TOMARIN 1,795,056

COIN OPERATED PRESSING DEVICE

Filed May 18, 1927 4 Sheets-Sheet 1

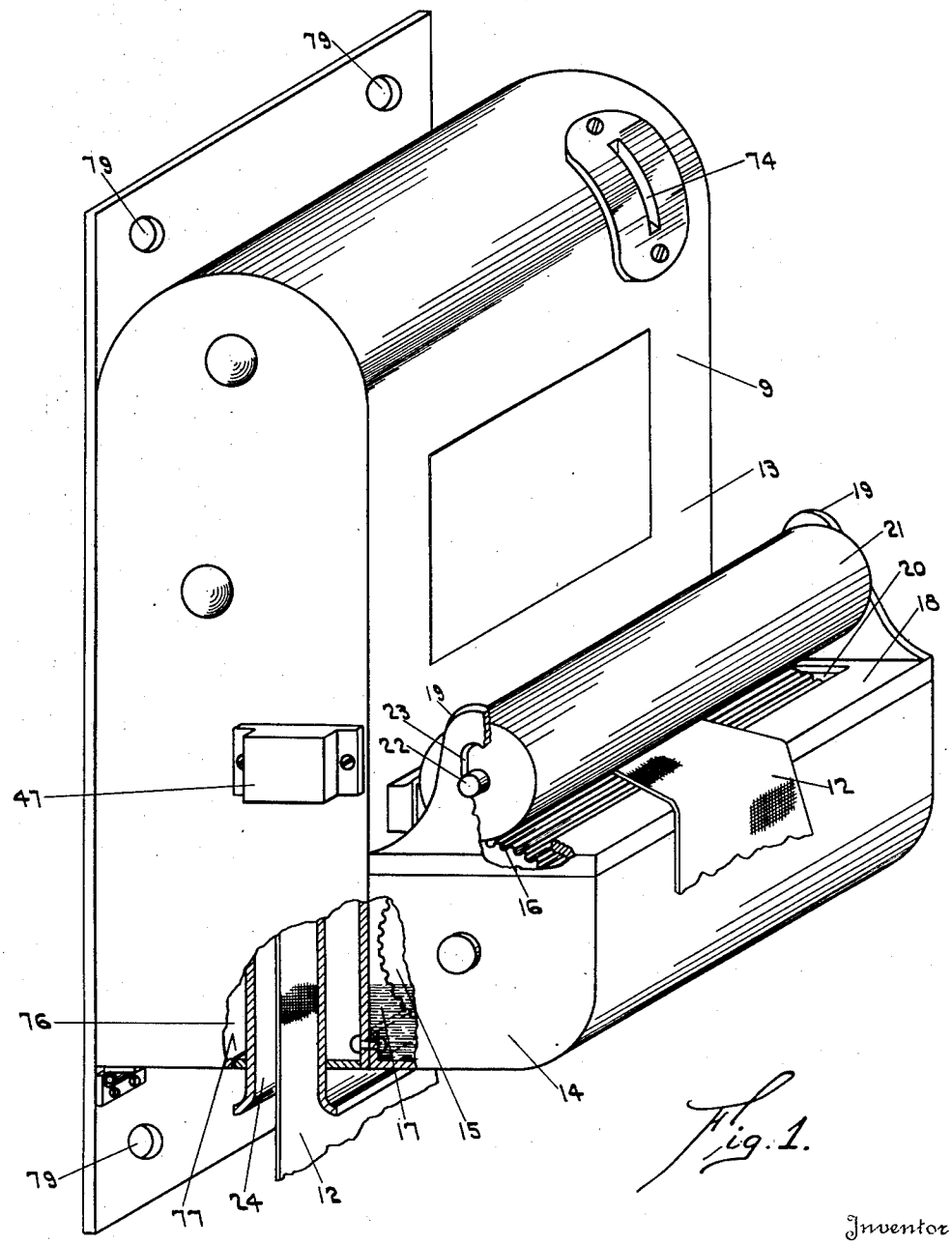

Fig. 1.

Inventor

William Tomarin

By Murray and Zugelter

Attorneys

March 3, 1931. W. TOMARIN 1,795,056

COIN OPERATED PRESSING DEVICE

Filed May 18, 1927 4 Sheets-Sheet 2

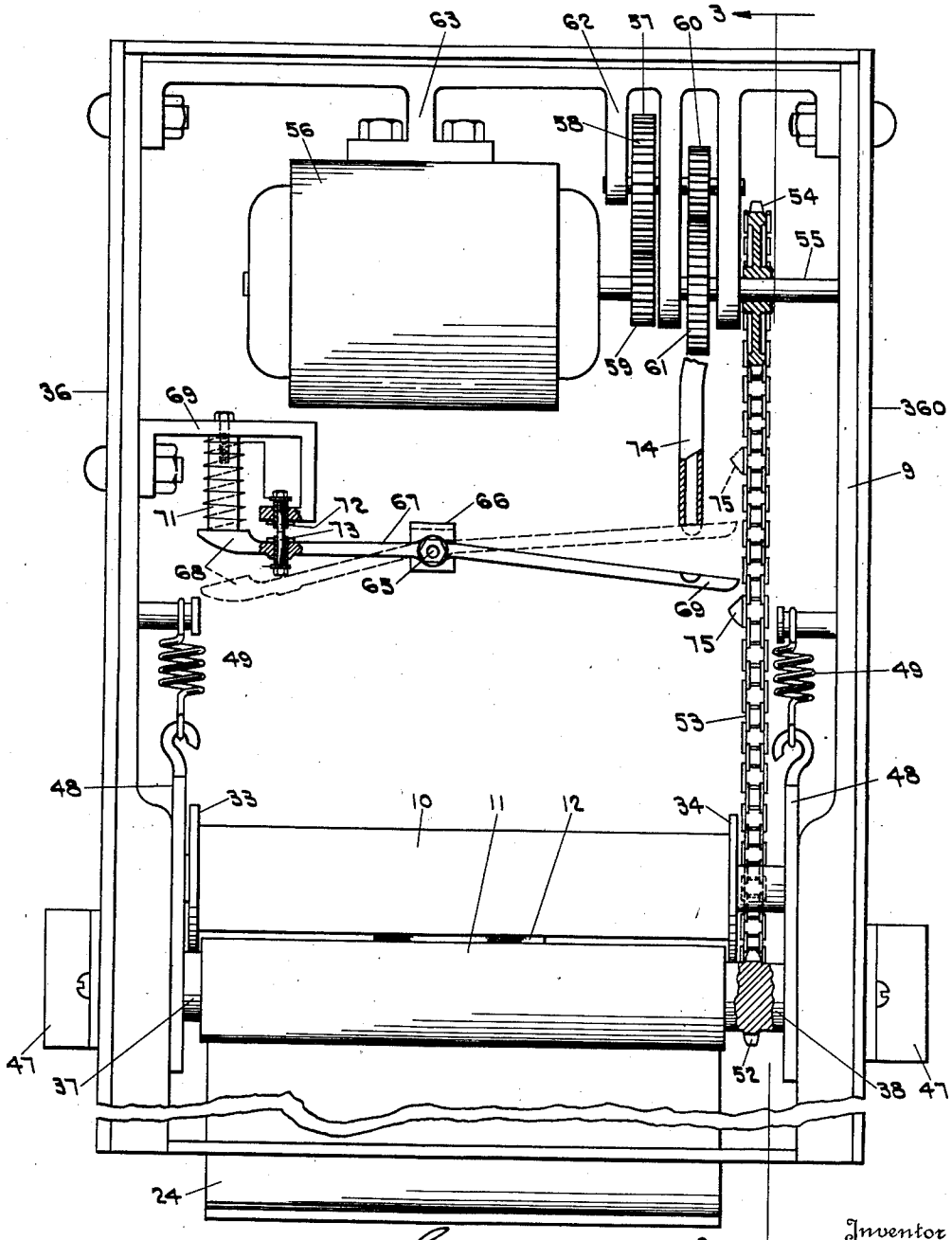

Fig. 2.

Inventor

William Tomarin

By Murray and Gregelter

Attorneys

March 3, 1931. W. TOMARIN 1,795,056

COIN OPERATED PRESSING DEVICE

Filed May 18, 1927 4 Sheets-Sheet 3

Fig. 3.

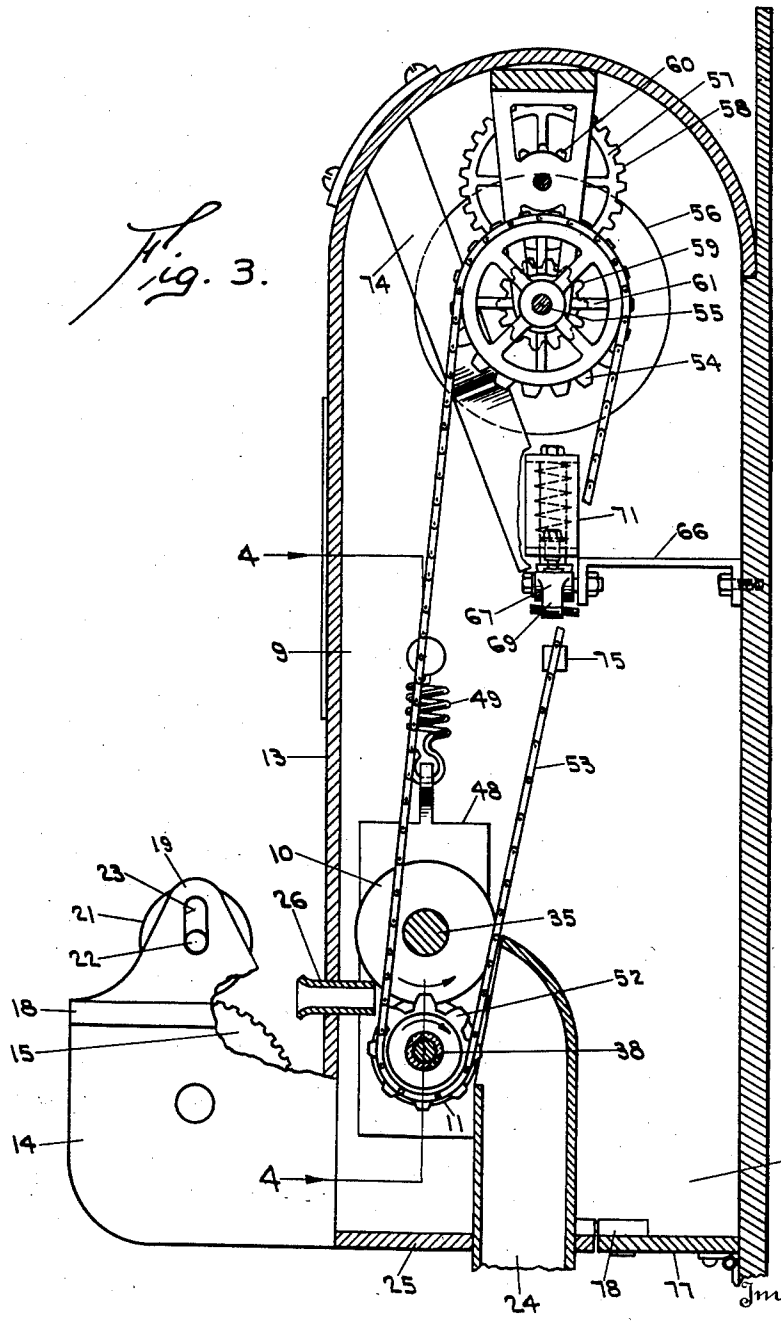

Inventor

William Tomarin

By Murray and Zugelter

Attorneys

March 3, 1931. W. TOMARIN 1,795,056

COIN OPERATED PRESSING DEVICE

Filed May 18, 1927 4 Sheets-Sheet 4

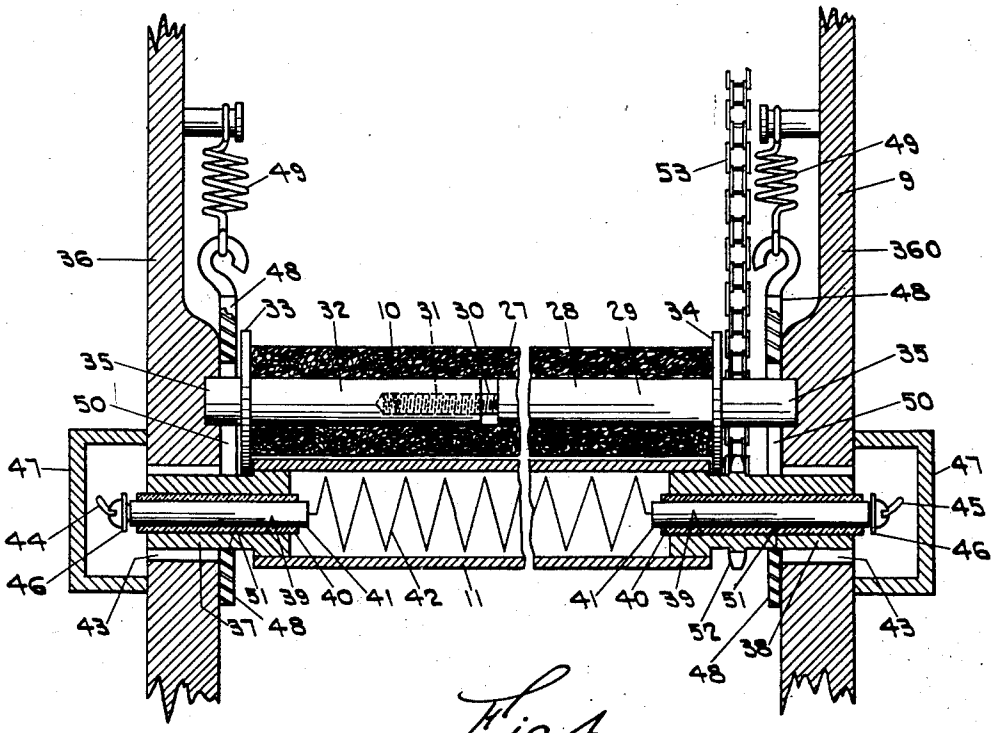

Fig. 4.

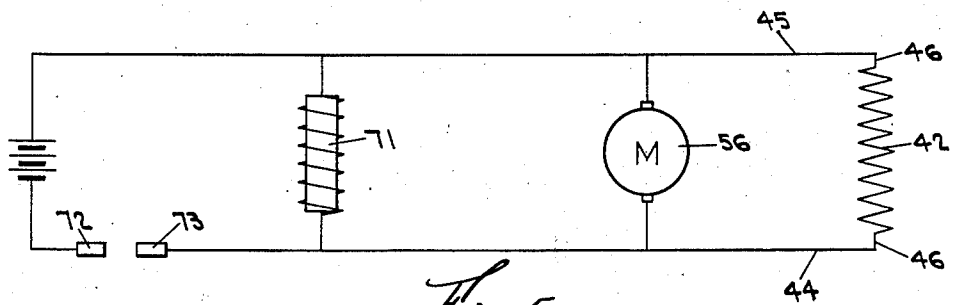

Fig. 5.

Inventor

William Tomarin

By Murray and Bugbee

Attorneys

Patented Mar. 3, 1931

1,795,056

UNITED STATES PATENT OFFICE

WILLIAM TOMARIN, OF CINCINNATI, OHIO

COIN-OPERATED PRESSING DEVICE

Application filed May 18, 1927. Serial No. 192,361.

This invention relates to a device for pressing small articles such as neckties, collars, handkerchiefs and the like, and has for an object the provision of means whereby such articles may be pressed by feeding the articles into the machine after having set the machine in operation by dropping a coin therein.

Another object is to provide means whereby an article to be pressed may be moistened and dried as the pressing operation is performed.

Another object is to provide a simple and efficient coin actuated means for setting the mechanism of the device in operation.

Another object is to provide a device for the purposes stated which may be easily kept clean, thereby precluding soiling of articles pressed therein.

Another object is to provide a device for the purposes stated which is simple of operation and which may be cheaply operated and manufactured.

These and other objects are attained by the means described herein and disclosed in the accompanying drawings in which:

Fig. 1 is a perspective view of the device, parts being broken away.

Fig. 2 is a front view of the device shown in Fig. 1, the front cover thereof being removed.

Fig. 3 is a sectional view on line 3—3 of Fig. 2.

Fig. 4 is a sectional view on line 4—4 of Fig. 3.

Fig. 5 is a view of a wiring diagram of an electrical circuit used in the device.

The coin operated pressing device of this invention comprises a casing 9 for housing the various operating mechanisms for controlling and actuating a pair of pressing elements, which may be in the form of rollers 10 and 11 one of which is adapted to be electrically heated. The pressing elements or rollers are adapted to receive therebetween an article to be pressed, as exemplified at 12. The means for actuating said rollers will be described later. Outside the casing and secured to the front wall 13 thereof is a moistening means comprising a fluid container 14 which may be of porcelain or glass or other suitable material. Disposed within the container is a freely rotatable cylinder 15 which is preferably corrugated as at 16 and which is partly immersed in a fluid 17, which may be water or, if desired, a treated solution. A cover 18 for the fluid container 14 is provided with brackets 19, and with an opening 20 through which the cylinder 15 may project. A smooth weighted cylinder 21 is provided with stud shafts 22 which are received in an elongated slot 23 in each bracket 19. The cylinder 21 is freely rotatable and rests upon the corrugated cylinder 15. It is obvious that by lifting the cylinder 21 and placing an article to be pressed such as 12 between the cylinders, the article 12 may be moistened by being drawn therebetween, the cylinders rotating and cylinder 15 supplying fluid from the container 14.

As shown in Fig. 3, the rollers 10 and 11 rotate in opposite directions as indicated by the arrows, wherefore the article 12 to be pressed is obviously drawn therebetween and is ejected from a tube 24 extending through the lower wall 25 of the casing. Aperture 26 in wall 13 permits access of the article 12 to the rollers.

Pressing element or roller 10 comprises a wrapping or tube of felt or other resilient material 27 disposed about a two piece shaft 28, one section 29 of which is provided with a threaded extension 30. A corresponding threaded bore 31 in section 32 receives the extension 30 which may be screwed thereinto for decreasing the distance between flanges 33 and 34 on sections 32 and 29 respectively, for compressing the felt wrapping 27 therebetween. Ends 35 of shaft 28 are journaled in the side walls 36 and 360 of the casing, for supporting roller 10.

Roller 11 is a comparatively light gauge metal cylinder provided with stud shafts 37 and 38 each having a bore 39 adapted to receive a tubular insulator 40. The bore in each tubular insulator supports a conductor of electricity 41. Electrically connected to each conductor 41 is a resistance wire or other heating element 42 (Fig. 4), which is housed within the roller 11 and which serves to heat

said roller when connected with a source of electricity. The conductors, insulators, and stud shafts are tightly fitted and rotate as a unit in elongated bearings 43 in side walls 36 and 360. Wires 44 and 45 are electrically connected to said conductors by any suitable means such as pivotal or swivel connections 46 which preclude twisting or breaking of the wires 44 and 45 as rotation is imparted to roller 11. Suitable covers 47 are provided for enclosing the wires and their swivel connections.

Means are provided for yieldingly urging the pressing element or roll 11 toward roll 10. Said means comprises a pair of vertically movable bearing blocks 48 adapted to be urged yieldingly upwardly by means of springs 49, as shown in Fig. 4. Locks 48 are provided with elongated perforations 50 adapted to receive shafts 37 and 38 of roller 11, which shafts have a bearing on the said blocks 48 at 51. It should be noted also that flanges 33 and 34 on roller 10 abut the shafts 37 and 38 for limiting the clearance between the pressing surfaces of the rollers.

Means are provided for imparting rotatory motion to roller 11, said means comprising a sprocket 52 on shaft 38 about which a chain 53, driven from a second sprocket 54, may pass. Sprocket 54 is fixedly mounted upon a shaft 55 which is rotated by means of an electric motor 56 and a train of reduction gears indicated generally at 57. The reduction gearing comprises gears 58, 59, 60, and 61 of sizes suitable for imparting any desired speed of rotation to the sprockets and rollers. The gearing is supported in a bearing bracket 62 which may be provided, if desired, with an integral motor support 63. Any suitable support means may be used, however, for supporting the gearing and motor.

As previously stated, the machine is adapted to be actuated by dropping a coin therein. The coin, dropping into the inside thereof, actuates a mechanism which closes an electrical circuit to the motor for starting the motor whereby roller or pressing element 11 is rotated. At the same time, an electrical circuit through the heating element 42 of roller 11 is closed, which energizes element 42 for heating the roller 11. Roller 10 is rotated by reason of the frictional contact thereof with article 12.

The coin actuated mechanism will now be described with reference to Figs. 2 and 5. Pivotally mounted at 65 upon a bracket 66 is a lever 67 having ends 68 and 69. End 68 is weighted so as to normally dispose the lever as indicated by the dotted lines in Fig. 2. An electro-magnet 71 is secured upon a bracket 69 on side wall 36, and is disposed directly above weighted end 68, which is of magnetic material. It is obvious that when the electro-magnet is energized, it will attract the end 68 and retain it in the operative position shown by full lines in Fig. 2. Bracket 69 also carries an electrical contact member 72 which is insulated therefrom, and lever 67 carries a like contact 73, insulated from the lever.

Above the end 69 of lever 67 is a coin chute 74. A coin dropped into the chute will strike the end 69 of the lever and rotate it about the pivotal mounting 65, whereupon the lever will assume the position shown by full lines in Fig. 2. Obviously, the circuit shown in Fig. 5 is immediately closed for energizing the electro-magnet 71, motor 56, and heating element 42 which are connected in parallel, as shown in Fig. 5. It should be noted also that the lever will remain in this position as long as the electro-magnet remains energized. Means are therefore provided for breaking the circuit through the said energized electrical fixtures.

The means for breaking the electrical circuit comprises a trip 75 on the chain 53. Upon a complete revolution of the chain 53, the trip abuts the end 69 of lever 67, carrying the end upwardly until said end strikes the coin chute as shown in the dotted lines. The circuit has then been broken, and trip 75 slides over the end of the lever and is carried by the momentum of the motor to the position indicated by dotted lines. The mechanism is then in position to receive another coin. The coins drop from the chute into a compartment such as 76 to which access may be had through an opening provided with a hinged door 77 having a suitable lock 78.

To facilitate mounting the device on a wall or the like, a series of perforations 79 for receiving fastening means are provided in the rear wall of the device. The electrical conductors 44 and 45 may extend without the casing at any convenient place, depending on the manner or means by which it is desired to make connections to a main current supply line.

What is claimed is:

1. In a pressing device the combination of a plurality of pressing rollers, means comprising an electric motor, reduction gearing, sprockets, and a chain for rotating one of the rollers whereby an article to be pressed may be drawn between the rollers, an electrical circuit for the motor, a non-accessible **switch** for closing said circuit to the **motor**, and means carried by the chain for **breaking** the circuit to the motor at a predetermined time.

2. In a pressing device, the combination of means for moistening an article to be pressed, a pressing roller, an electrical circuit, electrical means in the circuit and associated with the pressing roller for heating the pressing roller, a padded pressing roller disposed in close proximity with the heated roller and adapted for co-operation therewith for compressing the article to be pressed, a motor in

the circuit for rotating one of the rollers, means for closing an electrical circuit to the motor and roller heating means whereby the said moistened article may be simultaneously drawn between the pressing rollers and dried by the heat of the heated roller, and means for breaking the circuit of the motor and the heating means at a predetermined time.

3. In a pressing device, the combination of means for moistening an article to be pressed, a pressing element, electrical means for heating the pressing element, a second pressing element, yielding means for urging the elements toward one another for compressing therebetween an article to be pressed, a switch mechanism for closing an electrical circuit associated with the heating means whereby to energize the heating means for drying the moistened article disposed between the pressing elements, and means for breaking the said electrical circuit at a predetermined time.

4. In a pressing device, the combination, of a plurality of pressing elements for receiving therebetween an article to be pressed, means for moistening the article to be pressed previous to insertion thereof between the pressing elements, means for actuating the pressing elements for pressing the said article, electrical means for drying the moistened article during the pressing operation and means effective after predetermined movement of the pressing means for simultaneously stopping the pressing means and deenergizing the electrical drying means.

5. In a pressing device the combination of a pressing means, a complementary pressing surface for cooperation with the pressing means for pressing an article placed therebetween, an electric heating element for the pressing means, an electric motor for actuating the pressing means, an electric circuit embracing the motor and heating element, and means responsive to movement of the pressing means for breaking the electric circuit of both the motor and heating element.

6. In a pressing device the combination of a pressing roll, a complementary pressing surface for cooperation with the pressing roll for pressing an article disposed therebetween, an electric motor and transmission for driving the pressing roll, an electric circuit embracing the motor, switch means for energizing the motor whereby to impart rotary motion to the pressing roll, and means responsive to predetermined movement of the transmission for breaking the motor circuit.

7. In a device of the class described, the combination of a pressing roll, an electrical heating element in said roll, an electric motor, means for transmitting rotary motion of the pressing roll, an electric circuit embracing the motor and heating element, and switch means for simultaneously energizing the motor and heating element and means on the transmission means for automatically breaking the circuit upon a predetermined movement of the transmission means.

8. A pressing device for wall mounting comprising an inclosing casing, a feed chute in the front of the wall of the casing, a discharge chute in an adjacent wall, a rotary pressing device in the casing between said chutes, an electric heating element for the pressing device, an electric motor and transmission means disposed within the casing for actuating the pressing means, an electrical circuit including said motor and heating element, a switch within the casing for closing the circuit and means carried by the transmission for opening the circuit.

In testimony whereof, I have hereunto subscribed by name this 13th day of May, 1927.

WILLIAM TOMARIN.

CERTIFICATE OF CORRECTION.

Patent No. 1,795,056. Granted March 3, 1931, to

WILLIAM TOMARIN.

It is hereby certified that error appears in the printed specification of the above numbered patent requiring correction as follows: Page 3, line 60, claim 7, after the article "the" insert the words motor to the; and that the said Letters Patent should be read with this correction therein that the same may conform to the record of the case in the Patent Office.

Signed and sealed this 24th day of March, A. D. 1931.

M. J. Moore,
Acting Commissioner of Patents.

(Seal)