June 3, 1930. H. E. WHITE 1,762,112

METAL SECTION

Filed May 2, 1928

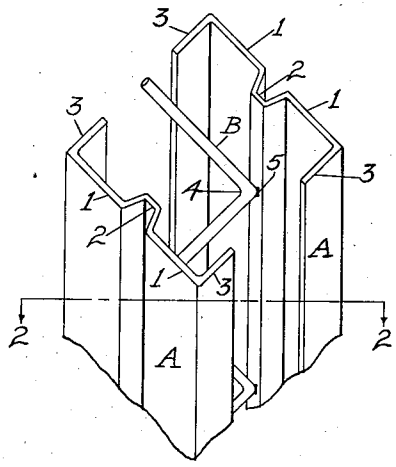

Fig. 1

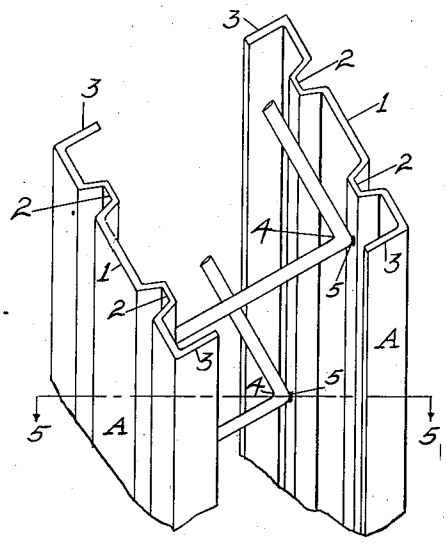

Fig. 4

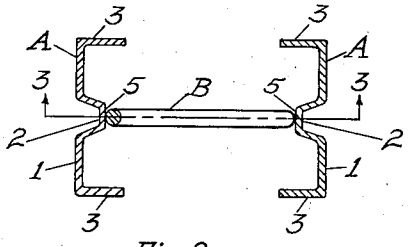

Fig. 2

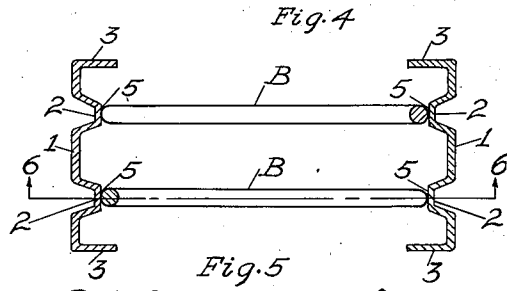

Fig. 5

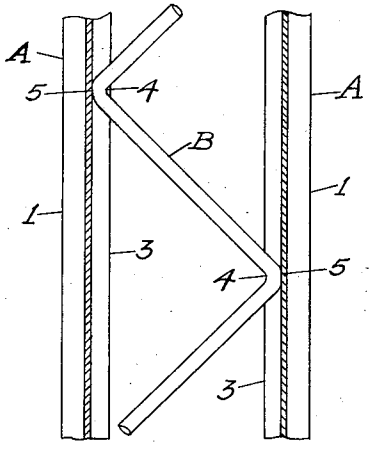

Fig. 3

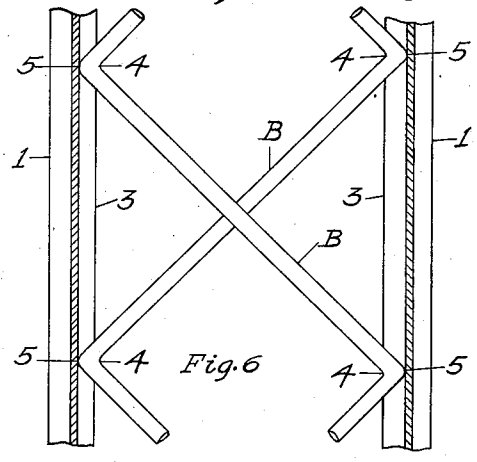

Fig. 6

INVENTOR.
Herbert E. White

BY W. Wiane H. E. Herman

HIS ATTORNEY

Patented June 3, 1930 1,762,112

UNITED STATES PATENT OFFICE

HERBERT E. WHITE, OF YOUNGSTOWN, OHIO, ASSIGNOR TO TRUSCON STEEL COMPANY, OF YOUNGSTOWN, OHIO, A CORPORATION OF MICHIGAN

METAL SECTION

Application filed May 2, 1928. Serial No. 274,605.

The present invention relates to members for metal structures, such as beams, girders, columns, cantilevers; and more particularly to a novel and efficient design of supporting structures, such as poles, towers, A frames and H frames, among other uses, for overhead wires and cables.

The primary object of my invention is to provide a deformation in a metal section which shall improve its radius of gyration and stiffen and reinforce said member or section against torsion or bending without materially increasing the weight of said member or section, and which shall provide at the same time contact surfaces and concentration of metal at desired points to facilitate the electrical welding of connections to said member by automatic welding machinery.

Another object of the invention is to produce a light, strong, and rigid steel section which shall have the maximum strength and rigidity for its weight and dimensions.

A still further object of the invention is to produce a metal section which shall reduce the area of unstressed metal or metal not usable to the best advantage in the construction of said structures.

Other objects will be apparent upon reference to the following description and drawings, in which:

Figure 1 is a perspective view of a metal structure assembled, embodying the features of the present invention.

Figure 2 is a cross sectional view of the metal structure shown in Figure 1 on the line of section 2—2 of such figure.

Figure 3 is a cross sectional view of a portion of the metal structure in Figure 1 on the line of section 3—3 of Figure 2.

Figure 4 is a perspective view of a variation in the deformation of the metal structures.

Figure 5 is a cross sectional view of the metal structure shown in Figure 4 on the line of section 5—5 of such figure.

Figure 6 is a cross sectional view of a portion of the structure in Figure 4, on the line of section 6—6 of Figure 5.

In the drawings, in which similar reference characters and numerals designate corresponding parts of figures, A represents the deformed channel sections, and B represents continuous lattice web members.

A single sheet of metal is used, from which is formed channel A, as may be seen in Figures 1 and 2. The web 1 is formed throughout its length in a continuous or intermittent trough-shaped depression 2, which is disposed symmetrically, preferably, in said web 1, and depressed in the direction of the flanges 3, or raised in the opposite or web side direction 1. To attain the objects hereinbefore recited, the deformation 2 is formed approximately three times, preferably, as deep as the thickness of the plate from which the said channel A is formed. The deformed channels A serve as legs or chords of metal members which are spaced opposite to each other at varying distances. A movable electrode engages a curved portion 4 of the said lattice web member B, as may be seen in the above Figures 1 and 3, at its point of intersection with the chord member A, while another opposing electrode engages the trough-shaped deformation 2 on its outer or web side 1. The deformed channel A and the lattice web member B are then electrically, autogenously welded together at the inner or flange side 5 of the trough-shaped deformation 2.

In the modification shown in Figures 4, 5 and 6, multiple trough-shaped depressions are disposed, preferably, symmetrically, and continuously or intermittently in the web 1 throughout its length and multiple lattice web members B are connected thereto in the manner above described for single web members.

In accordance with the provisions of the patent statutes, I have described the principle and construction of my invention together with the distinct views which I now consider the best embodiment thereof; but I desire to have it understood that it is not to be limited to the forms and precise details given but is to be limited by the scope only of the following claims.

What I claim is:

1. A structural unit comprising a sheet metal member longitudinally channeled to

provide a reinforcing flange, and a lattice or web member of zigzag form welded at spaced points to the inner face of the flange, said flange being unbroken by the welds and constituting a stiffening reinforcement for the member both behind and between the said welds.

2. A structural unit comprising a sheet metal member longitudinally channeled to a depth materially greater than the thickness of the plate and forming a reinforcing flange, and a lattice or web member of zigzag form welded at spaced points to the inner face of the flange, said flange being unbroken by the welds and constituting a stiffening reinforcement for the member both behind and between the said welds.

3. A structural unit comprising a sheet metal member longitudinally channeled to a depth materially greater than the thickness of the plate and forming a longitudinal reinforcing flange, and a lattice or web member of a width not greater than the width of said flange and of zigzag formation with its spaced points contacting only with and welded only to the inner face of the flange, said flange being unbroken by the welds and constituting a stiffening reinforcement for the member both behind and between the said welds.

4. A structural unit comprising a pair of spaced apart sheet metal members, both of which are provided with longitudinally disposed inset channels, forming inset oppositely disposed inset reinforcing flanges having substantially flat inner faces, and a web rod of zigzag form having its points against and welded to said inner faces only, the said flanges being unbroken by the welds and constituting stiffening reinforcements for said members, both behind and between the said welds.

5. A structural unit comprising a pair of spaced apart sheet metal members having inset margins forming side flanges and intermediate longitudinal channeled portions forming oppositely inset reinforcing flanges between the side flanges, said intermediate reinforcing flanges having substantially flat inner faces, and a web rod of zigzag form having its points against and welded to said inner faces only, the said flanges being unbroken by the welds and constituting stiffening reinforcements for said members both behind and between the said welds.

In testimony whereof, I affix my signature.

HERBERT E. WHITE.