June 7, 1938. J. M. UPTON 2,119,659

APPARATUS FOR CAPPING NAILS

Filed Dec. 16, 1935 4 Sheets-Sheet 1

Fig. 1

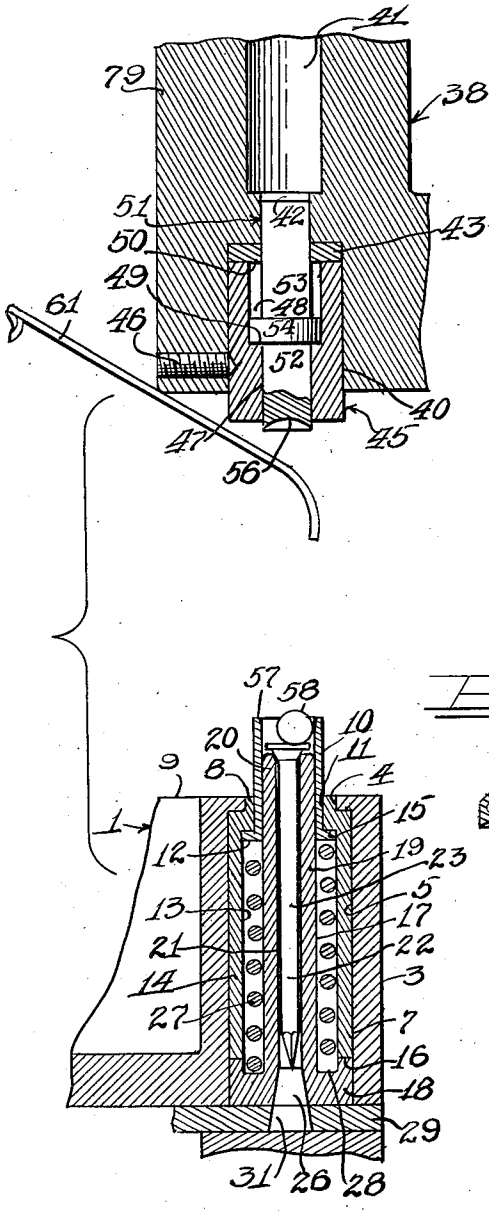

Fig. 2

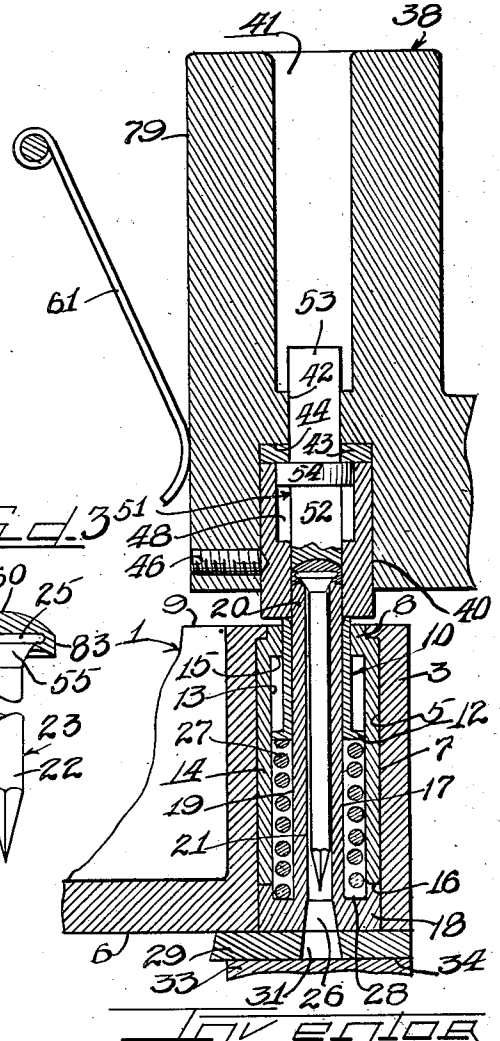

Fig. 3

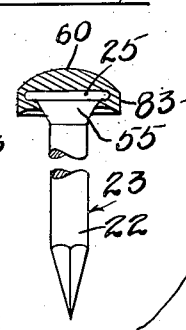

Inventor
John M. Upton

by Charles W. Hills Attys

June 7, 1938. J. M. UPTON 2,119,659

APPARATUS FOR CAPPING NAILS

Filed Dec. 16, 1935 4 Sheets-Sheet 2

Fig. 5

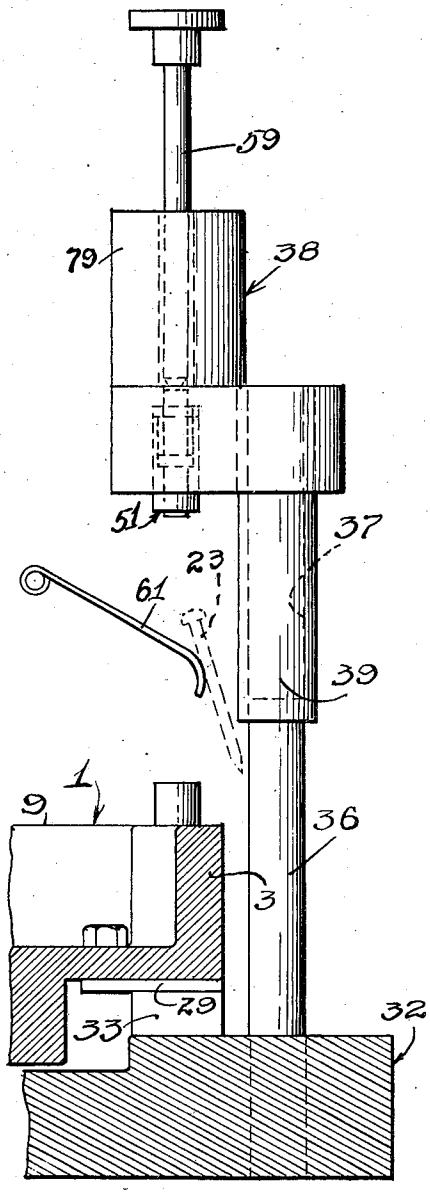

Fig. 4

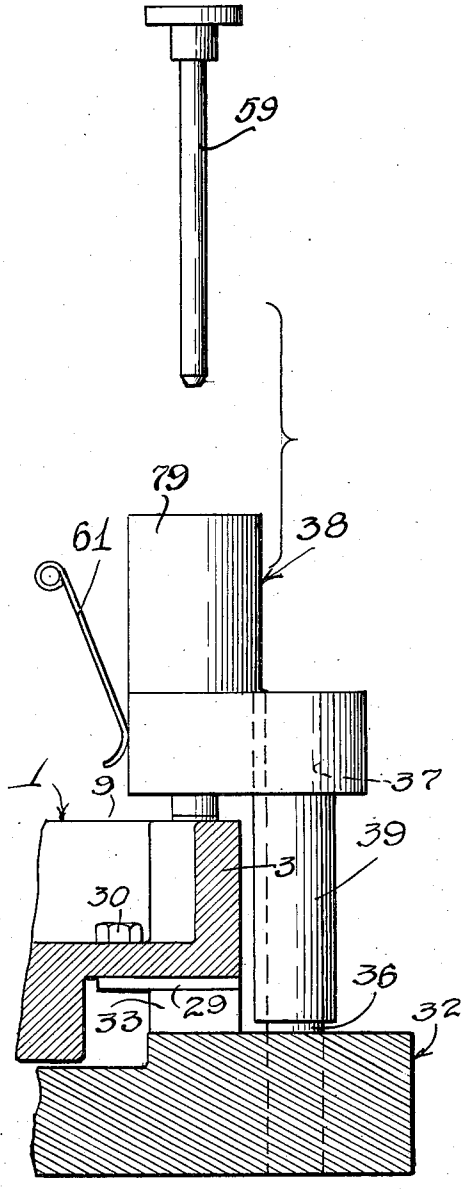

Inventor
John M. Upton.

by Charles O. Hill Attys.

June 7, 1938. J. M. UPTON 2,119,659

APPARATUS FOR CAPPING NAILS

Filed Dec. 16, 1935 4 Sheets-Sheet 3

Fig. 6

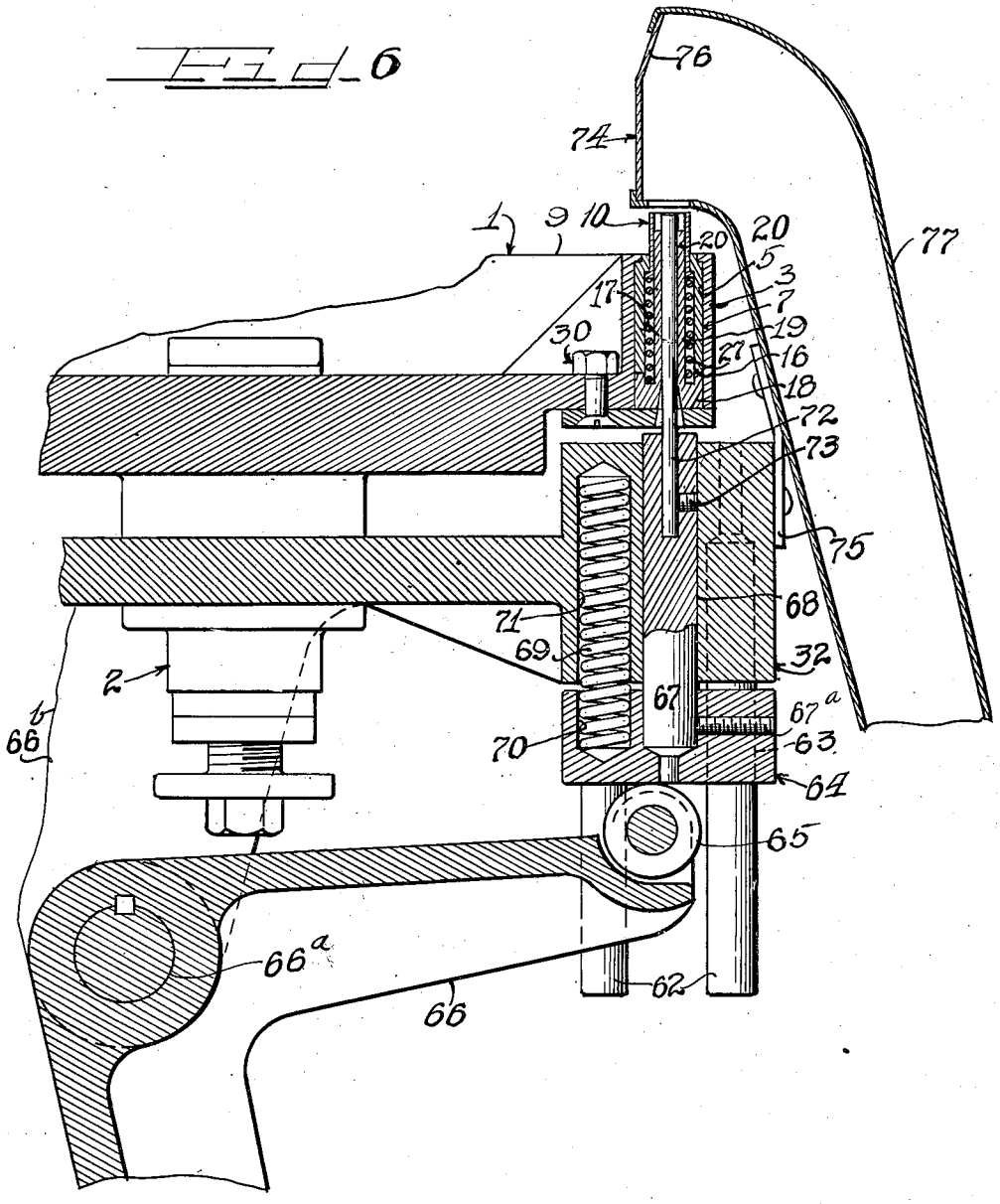

Inventor
John M. Upton.

by Charles O. Hills Attys.

June 7, 1938. J. M. UPTON 2,119,659

APPARATUS FOR CAPPING NAILS

Filed Dec. 16, 1935 4 Sheets-Sheet 4

Fig. 7

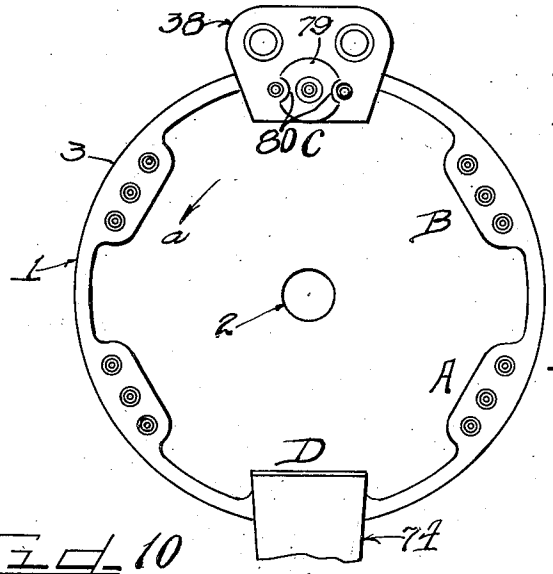

Fig. 8

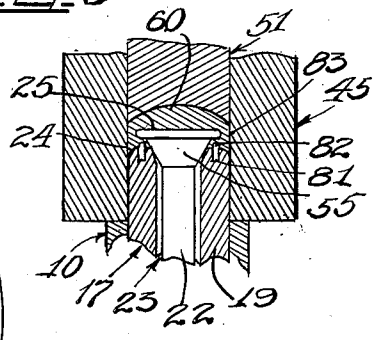

Fig. 9

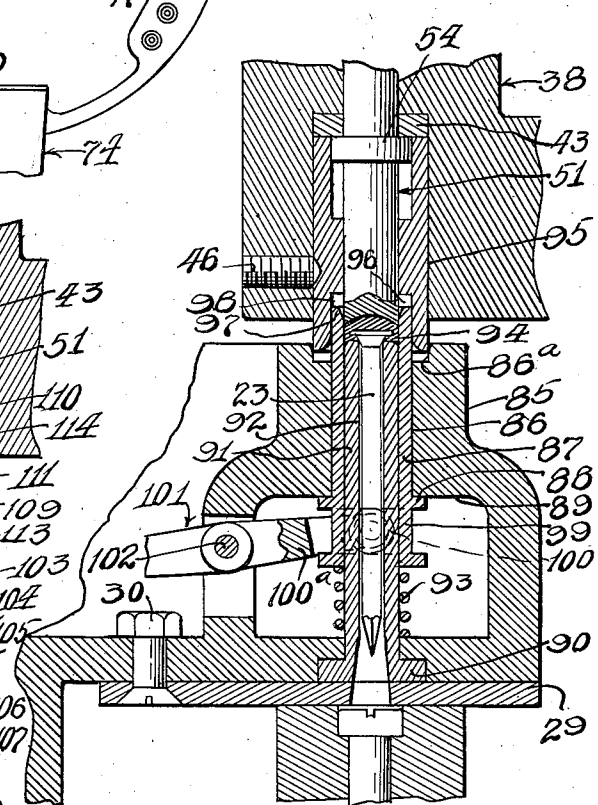

Fig. 10

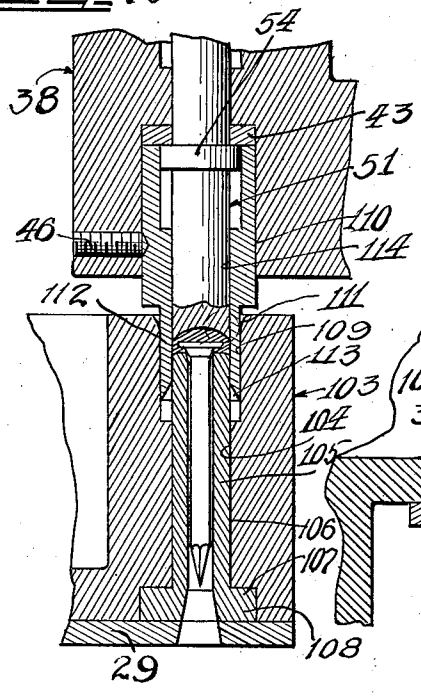

Inventor
John M. Upton.

by Charles O. Hill Attys.

Patented June 7, 1938 2,119,659

UNITED STATES PATENT OFFICE

2,119,659

APPARATUS FOR CAPPING NAILS

John M. Upton, Chicago, Ill., assignor to Filshie Lead Head Nail Company, Inc., Chicago, Ill., a corporation of Illinois

Application December 16, 1935, Serial No. 54,542

15 Claims. (Cl. 10—156)

This invention relates to fastening means such as nails, spikes and the like and is concerned more particularly with the provision of an improved apparatus for and method of capping such fasteners with relatively soft metal such as lead.

Nails of this kind are generally used in fastening corrugated and other sheet metal to beams and other surfaces, where the heads of the nails are subjected to the action of the weather. The relatively soft metal cap serves as a means for not only sealing the nail head from the weather but also forms a seal between the nail and the portion of the roofing metal surrounding the hole through which the shank of the nail projects.

It is an object of the present invention to provide an improved apparatus and method of capping nails whereby considerable saving in time and expense over previously known apparatuses and methods is effected.

It is an object of the invention to provide a male die with means for supporting a nail to be capped and also for supporting a mass of soft metal to be pressed about the cap.

It is another object of the invention to provide a male die formed to support a nail to be capped, with means, forming no part of the die structure, for retaining a ball or other mass of capping material until such time as the cooperating die members are capable of retaining the mass.

It is a further object of the invention to provide a male nail supporting die with a yieldable retainer for the capping material, the retainer being adapted to be displaced by a female die as the dies are brought together.

It is also an object of the invention to provide a capping die structure comprising die means for removing a capped nail from one of the dies.

It is a further object of the invention to provide for withdrawal of a capped nail from the die in which the uncapped nail was supported, and to dispose of the capped nail in such a manner as to preclude its return to the die from which it was removed.

In accordance with the general features of one form of the invention, there is provided a preferably stationary male die about which is telescopically disposed a spring stressed sleeve adapted to extend above the die to provide a receptacle. The die is preferably formed with a hole to receive a blank headed nail, the head overlying the die adjacent the hole and thus supporting the nail. A pellet or other mass of relatively soft metal such as lead and preferably of such volume as to provide just enough material to form the cap is deposited into the upstanding sleeve so as to overlie the head of the nail. A relatively movable female die structure comprises a collar of substantially the same inside diameter as the spring pressed sleeve so as to be capable of displacing the spring pressed sleeve about the male die. The movable die structure also includes a punch or ram telescopically received in the collar and capable of limited lost motion therein. As the movable die descends, the collar thereof first displaces the spring-pressed sleeve and thus serves to prevent loss of the pellet.

As the descent of the female die continues, the lost motion is taken up and the ram is forced against the pellet, which is then forced about the head of the nail and assumes the exterior shape determined by the opposed surfaces of the male die and ram and the intervening inner wall of the collar.

As the female die is removed, the cap clings to the bottom of the collar and, when there is sufficient clearance between the spring-pressed sleeve and the female die, the ram is moved again so as to thrust the cap from the associated collar. At this point the capped nail is thrust sidewise by a deflector, and the nail gravitates into a bin or keg provided at a side for that purpose. Thus the capped nail is prevented from returning to the lower die from which it was withdrawn.

Further in accordance with the invention, provision is made for the ejection of any nail which is defective or for some other reason has remained in the lower die. A keg or other suitable receptacle is provided for the reception of such nails, so that the defective nails are separated from the good nails without the necessity of a rigid inspection for this purpose.

In accordance with another form of the invention, the collar on the upper die may be omitted insofar as displacement of the spring-pressed sleeve is concerned, and the latter may be allowed to remain in its retaining position so as to serve as a die element to form the outer periphery of the cap. With this modification, when the ram is withdrawn, the nail clings to the spring-pressed sleeve. Thereafter the spring-pressed sleeve is positively depressed until it is clear of the cap, and thereafter the capped nail may be ejected upwardly from the lower die in a manner heretofore described for the ejection of defective nails. Of course, it will be appreciated that in this form of the invention the nails so ejected will include defective and good nails, requiring inspection to determine the one type from the other.

In accordance with a still further form of the invention, the spring-pressed sleeve may be dispensed with and instead the lower die element surrounded by a relatively stationary wall spaced therefrom and extending somewhat thereabove. This portion of the wall extending substantially above the lower die serves as a retaining means for the mass of lead such as a ball fed thereinto, so as to hold the ball substantially over the nail supported by the lower die. The collar on the upper die structure is shaped to engage the mass and telescope within the retaining wall and fit closely about the nail die so as to imprison the mass of lead or the like therewithin and between the lower die and the ram. Thereafter the operation is substantially the same as that first mentioned above.

One or more of the die elements may be suitably formed to impress the desired design in the cap.

From the foregoing, it will be observed that it is possible to use pellets of the shape of a ball or other suitable shape independent of the shape of the nail head.

Other objects and advantages of the invention will appear as the description proceeds.

This invention (in preferred forms) is illustrated in the drawings and hereinafter more fully described.

Figure 1 is a fragmentary view, partly in section and partly in elevation, showing the cooperating die structures after the movable die has commenced its movement toward the stationary die.

Figure 2 is a view similar to Figure 1 but shows the die structures at the completion of the nail-capping operation.

Figure 3 is an enlarged view, partly in section and partly in elevation, of a capped nail formed in accordance with the invention.

Figure 4 is a view similar to Figure 2 with most of the parts in elevation.

Figure 5 is a view similar to Figure 4 but shows in addition how the completed nail is ejected.

Figure 6 is a fragmentary view, partly in section and partly in elevation, showing auxiliary ejecting means for any nails which, through defect, have not been removed upon removal of the movable die mechanism.

Figure 7 is a plan view of the table carrying the lower die structure and the relative positions of the upper die structure in the auxiliary ejecting means.

Figure 8 shows the die mechanism in cooperative positions forming a cap, wherein means is provided to ornament the underside of the cap.

Figure 9 is a view similar to Figure 2 but of a modified die structure.

Figure 10 is a view similar to Figure 2 but of a still further modified form of the invention.

Referring now more particularly to the drawings, there is provided a plate 1 of generally circular form adapted to be indexed about a central axis 2 to bring successive sets of dies carried thereby into register with complemental dies formed to cooperate with one set of dies on the plate at any one time. The number of dies to the set may of course be varied as desired, three being employed herein for illustrative purposes only. The plate 1 is provided with a peripheral upstanding wall 3 which is bored at the upper side thereof as shown at 4 and then counterbored as shown at 5 through to the bottom 6. A sleeve 7 is adapted to fit snugly in the counterbore 5 and has a reduced neck 8 at its upper end to fit in the bore 4, terminating preferably flush with the top 9 of the peripheral flange 3 of the plate 1. Telescopically fitted within the sleeve 7 is a second sleeve 10 adapted for sliding engagement with the inner wall 11 of the neck 8, and having an outwardly extending lower flange 12 formed for sliding engagement with the interior wall 13 of the enlarged portion 14 of the sleeve 7. The shoulder 15 formed by the neck 8 of the sleeve 7 provides an abutment engageable with the flange 12 to limit upward movement of the sleeve 10.

It will be observed that when the sleeve 7 is fitted with the neck 8 thereof disposed in the bore 4, the lower end 16 of said sleeve is somewhat spaced from the bottom 6 of the plate 1. A die member 17 in accordance with this invention is provided with a head 18 of a diameter to preferably snugly fit in the counter-bore 5 and is of such depth as to fill the space in the counter-bore between the bottom 6 and the bottom 16 of the sleeve 7. The die member 17 is formed with a stem or reduced portion 19 which is elongated and extends upward within the inner sleeve 10 and somewhat beyond the top surface 9 of the plate flange 3 as shown at 20. It will be observed that the die member 17 is axially bored at 21 to receive the shank 22 of a nail 23 adapted to be supported from the top 24 of the die 17, with the head 25 of the nail substantially clear. The head 18 of the die 17 is counter-sunk at 26 to provide a flared entrance to the bore 21 for guiding the end of a knock-out element as will appear hereinafter.

A spring 27 is disposed in the annular space formed by the sleeve 7, die stem 19, the flange portion 12 of the inner sleeve 10 and the head 18 of the die member 17. This spring is under compression and constantly urges the inner sleeve 10 to its topmost position, determined by the engagement of the flange 12 with the shoulder 15. If desired, the inner side of the die member head 18 may be recessed as at 28 to receive one end of the spring. It will be observed that the inner sleeve 10 is of such length that when it is at its uppermost or outermost position, it extends substantially beyond the top of the top 24 of the die stem 19 so as to form a receptacle for receiving the nail capping material as will appear hereinafter. At the bottom 6 of the plate 1 is provided a retaining plate 29 held by suitable fastening means 30 (Figure 4) accessible whenever desired to enable the plate 29 to be removed and attached. It will be observed that the retaining plate 29 retains the die member 17, spring 27, sleeve 10 and sleeve 7 within the indexing plate flange 3, the plate 29 being readily removable as will be explained, to permit removal of any or all of the parts mentioned. The plate 29 is provided with an opening 31 adapted to register with each counter-sink 26 with substantially the same flare to assist in the guiding of a knock-out element as will appear hereinafter.

The die structure just described is adapted to receive a substantial thrust upon each capping operation. There is accordingly provided a bolster structure 32 to withstand this thrust or pressure, as shown in Figure 4 and elsewhere.

This bolster comprises a base of sturdy substantial construction on which is secured a bar 33 adapted to be substantially slidably engaged with the bottom 34 of the retaining plate 29. As stated above, for purposes of illustration only, the die structures are provided in sets of three. Accordingly it will be observed that one retaining

plate 29 may be provided for each set of die structures, and has three openings 31 for registering with the respective openings 26 in the die members 17. Also, there may be provided a thrust-receiving bar 33 for each retaining plate 29. The indexed plate or table 1 is adapted to be rotated with respect to the bolster 32 in any desired direction such as that shown by the arrow a (Figure 7). Accordingly, to insure proper sliding engagement of the retaining plate 29 over the relatively stationary thrust-receiving bar 33, the approach or meeting ends of the respective members may be bevelled.

After the completion of the die operation, the set of dies 17 is indexed off the bar 33 and may be shifted to a point below which the bolster does not extend, or at which sufficient clearance under the securing means 30 is afforded to render such means accessible should it for any reason be desired to remove the retaining plate 29 and the die member 17 or any part or parts associated therewith.

The machine is provided with a suitable frame of which the bolster 32 may form a part, providing guide posts or standards 36 received in openings 37 in a reciprocating die block 38. The block 38 is provided with depending bearing sleeves 39 of sufficient length to properly guide the block 38 in its reciprocating movement. The die block 38 is provided with lower and upper counter-bores 40 and 41 and an intermediate bore 42. Received within the lower bore 40 is a thrust washer 43 positioned against the shoulder 44 at the upper end of the bore 40. Also received within the bore 40 is a collar 45 stationarily held in place as by a set screw 46 in a position to prevent substantial movement of the washer 43. The collar 45 has at its lower part a bore 47 of such diameter as to slidably telescope over the top part 20 of the stem 19 of the die 17. The collar 45 is counter-bored at 48 above the bore 47, providing a shoulder 49 adjacent said bore, and providing a shoulder 50 on the washer 43 at the other end of the counterbore 48.

A die punch or ram 51 is telescopically received in the block 38 so as to have lost motion within and also move with the block. The punch 51 is provided with a lower die portion 52 slidably fitted in the bore 47 of the collar 45, and an upwardly projecting end 53 slidably received in the intermediate bore 42 of the block 38, and provided with an intermediate flange 54 engageable with the collar shoulder 49 to determine one limit of movement of the punch 51 relative to the collar 45 and engageable with the upper shoulder 50 to determine the other limit of movement of the punch 51 relative to the collar 45. The punch 51 is freely movable within the limits indicated so that when the block 38 is in an elevated position, the flange 54 is caused by gravity to be engaged with the shoulder 49, when the block is prepared to descend in a nail-capping operation.

The die block 38 is reciprocated by any suitable mechanism (not shown). When it is in raised position, the sleeve 10 is in its elevated position and is there held yieldably by the spring 27. In this position, the sleeve 10 projects substantially above the top 24 of the lower die stem 19, providing, as heretofore explained, a receptacle. Suitable nail feeding mechanism not forming any part of the instant invention is provided to deposit at station A (Figure 7) a nail at the proper time into the bore 21 in the lower die stem 19. The nail may be of any suitable construction, provision being made either in the nail structure itself or in the die structure for supporting the nail from the die structure in such a manner that the top, outer periphery and underside of the head are free, that is, out of contact with any other part. Such means may take any suitable form, and the means for this purpose herein disclosed are provided for illustrative purposes only.

The means for spacing herein illustrated comprises a tapered shoulder 55 connecting an otherwise preferably substantially flat head 25 to a substantially cylindrical shank 22. The nail shank opening 21 of the die stem 19 is of such formation at the top 24 of the stem as to engage the tapered shoulder substantially below the head 25 so as to leave the upper part of the tapered shoulder as well as the head proper free from contact with any other part.

After the nail has been deposited at the station A (Figure 7), the set of lower dies is indexed to the next station B, where any conventional or other suitable lead mass feeding mechanism may be employed to drop or otherwise deposit a mass of lead or other suitable capping material, in a preferably cold state, in the receptacle provided by the upstanding sleeve 10 extending upwardly beyond the nail head 25.

The set of dies carrying the nails and the lead masses thereover is again indexed, stopping at station C, below the die block 38 so that the punches 51 are axially aligned with the die stems 19. Now the block 38 descends, the bottom concave wall 56 of the punch 51, which projects slightly below the collar 45 due to gravity, entering the sleeve 10 at 57 (Figure 1). A moment later, the collar 45 engages the top of the sleeve 10 and depresses the sleeve 10 against the action of the spring 27, until the collar 45 reaches a point substantially below the top 24 of the stem 19, stopping short of the top 9 of the indexing plate flange 3.

Due to the lost motion arrangement of the punch 51 relative to the collar 45, the punch will remain relatively stationary after its engagement with the lead or the like ball 58 or other mass of capping material. The punch 51 will remain stationary until its flange 54 is engaged by the shoulder 50. Said shoulder will then transmit the downward thrust of the block 38 to the punch through its flange 54 and, from the beginning of such engagement, the punch 51 will move as a unit with the block 38. The commencement of the movement of the punch 51 with the block 38 occurs after the collar 45 has descended slightly below the top 24 of the die stem 19. The block 38 is allowed to continue its descent until the punch has compressed the mass from the shape of a ball or other suitable shape to that defined by the concave surface 56, the bore 47 of the collar 45 and the top 24 of the die stem 19, which is the shape desired.

Upon the completion of the die operation, the block 38 is elevated, and as the collar 45 rises, the sleeve 10 also rises in response to the pressure of the spring 27, until the flange 12 abuts the shoulder 15. Aligned with the upper bore 41 in the block 38 is a stationary pin 59. The continued rise of the block 38 results in its bore 41 telescopically receiving the pin 59, and the upper end 53 of the punch 51 is arrested by the pin 59 while the block 38 continues to ascend. Also ascending with the block 38 is the collar 45, to the bore 47 of which the completed cap 60 clings. The rising of the collar 45 relative to the

punch 51 results in the punch's ejecting the nail from the collar 45.

The die block 38 reaches its zenith substantially just when the capped nail is released by the punch 51 from the bore of the collar 45. At this point the punch 51 is still capable of a slight descent, until it projects slightly below the collar 45. After the release of the nail, there is nothing to hold up the punch 51, which then gravitates away from the knock-out pin 59 until its flange 54 abuts the shoulder 49. This slight amount of lost motion insures against injury which might result otherwise from collision between the knock-out pin 59 and the punch 51.

The capped nail, now being free of the collar 45, begins to gravitate freely and would very likely return to the lower die 17. Provision, however, is made against this. At the side of the block 38, there is arranged a deflecting member 61 which may be itself in the form of a spring normally pressing against the die block 38 or may be pressed by an auxiliary spring (not shown) against the die block. When the die block 38 is in its elevated position, the deflector 61 is projected between the die block and the plate 1 so that the gravitating nail is deflected aside by the element 61 (Figure 5), and falls in a lateral downward path into a keg suitably placed for that purpose.

When the die block 38 is raised sufficiently, the table 1 is indexed away from under the block 38 around to an auxiliary ejecting mechanism at the station D. At this station, the bolster 32 is provided with a plurality of downwardly extending posts 62 (Figure 6) passing through openings 63 in a block 64 adapted to reciprocate on said posts. The block 64 is supported by a roller 65 at one end of an actuating arm 66 pivoted at 66a to a bracket arm 66b on the bolster 32 and having limited oscillatory movement so that when the roller is in its lowermost position, the block 64 is still mounted on the rods 62. The block 64 carries a rod 67 secured at 67a in a bore 68 in the bolster 32. Springs 69 are received in cooperating openings 70 and 71 in the block 64 and bolster 32, respectively, to cushion the block and bolster apart.

The rod 67 carries an ejector pin 72, suitably held in place as by a set screw 73 and adapted to be axially aligned with a die member 17 as shown in Figure 6. After the set of dies 17 is properly indexed to the station D, each of the three dies is positioned over and in axial alignment with each of three ejector pins 72. It will be observed that each ejector pin 72 extends to a very substantial extent above the rod 67 carrying the same. Each set of flared openings 31 and 26 previously described now comes into play to guide each pin 72 properly into the bore 21 in the die stem 19. This ejector mechanism is arranged to project the pins 72 upwardly through the dies 17 irrespective of the presence or absence of capped or other nails in the dies 17. Thus provision is made for the ejection of any nail or nails which failed to rise with the collars 45 of the upper die block 38. Any nail so remaining is ejected by the pin 72 into a receptacle 74 which may be attached by a bracket 75 or in any other suitable way to the bolster 32. The receptacle 74, it will be observed, may be provided with a deflecting surface 76 against which the tops of the ejected nails will strike and be deflected aside so that they will fall down the chute 77 forming part of the receptacle 74, into a suitably positioned keg or other receiving means. As has been pointed out, the nails which do not cling to the collar 45 are slightly defective, and thus it will be observed that the nails which are defective are automatically separated from the nails which are not defective. That is, the latter, rising with the block 38 after the die operation, are deflected into one keg, and the former, not rising with the block 38, are indexed around and ultimately are thrown upward and out by the ejecting mechanism at the station D into a different keg.

The portion 79 of the block 38 has the upper counterbore 41 as shown in Figure 6 for receiving the center one of the set of three knock-out pins 59. Of course, if desired, an upwardly projecting portion 79 could be provided for each of the upwardly projecting portions 53 of the punches 51, but preferably it is hollowed out at 80 adjacent the tops 53 of the end punches 51 in order to provide clearance for the end knock-out pins 59 when the top of the portion 79 vertically laps said pins.

After the operation of the auxiliary knock-out mechanism at station D, and following the complete withdrawal of the pins 72 from the plate 29, the table 1 is indexed to station A where the blank nails are fed into the spring pressed sleeves 18 to repeat the cycle as explained above.

It has been mentioned hereinabove that one or more of the die elements may be suitably designed to provide either in the form of an engraving or in relief any suitable design in the cap. For example, in Figure 8, to form diametrically opposite or otherwise relatively arranged depressions in the bottom of the cap, pins 81 may be suitably fastened in each die stem 19 at the top 24 so as to project upwardly free thereof a slight degree. The projecting portions 82 are preferably substantially spaced from the nail head 25 and tapered shoulder 55 so that the flowing capping material may pass into the space between the projecting portions 82 and the adjacent portions of the nail. The completed cap, when the stem 19 is so modified, will have diametrically opposite holes in its bottom surface. These holes or depressions may be of any desired depth but preferably are of slight depth in order that a suitable amount of capping material may be provided adjacent the under side of the head of the nail to form an adequate seal between said portions of the nail and the corrugated roofing or other material through which the stem of the nail is to pass, as is well known in the art of roofing nails. The two projecting portions 82 are to be understood as illustrated herein by way of example, since any suitable number of such projections may be provided, such as three in an equilateral or other triangular relation, or four or more, or if desired only one may be provided. Moreover, it is to be appreciated that instead of pin-like projections, any other design of projection may be provided. Likewise, any design may be provided at the concave surface 56 of the punch 51. The design may be formed as a depression instead of a projection in any of the die parts.

In accordance with another form of the invention, the table 85 could be bored at 86 and counterbored at its upper part as at 86a. Within the bore 86 is slidably received a sleeve 87 provided with a flange 88 at the lower part thereof for engagement with a shoulder 89 at the bottom of the bore 86 in the table 85, to limit the upward telescoping movement of the sleeve 87 within the table. Stationarily received within the table 85

is a die member 90 having a stem 91 provided with a bore 92 for receiving the nail 23. The sleeve 87 is constantly urged upward by a spring 93, and when in its uppermost position projects substantially above the top 94 of the die stem 91 so as to provide a receptacle for a ball or other shape of mass of lead or other capping material. The counter-bore 86a is of such diameter as to leave an annular space even when the upper part of the sleeve 87 projects thereinto.

The upper die block 38 in this form of the invention may be substantially the same as that previously described. The only difference involves the formation of the lower part of the collar which for this reason is given a different number, 95. The lower part of the collar 95 is counter-sunk at 96 to a diameter such as to telescopically receive the upper part 97 of the sleeve 87. When the die block 38 reaches its lowermost point, as shown in Figure 9, it will be observed that the lower end of the counter-sunk portion 96 is disposed in the counter-bore 86a in the table 85, there being however a slight clearance to prevent injury, and likewise the part 97 of the sleeve 87 is projected into the portion 96, there being a slight clearance at 98 to prevent injury. The ends of the parts 96 and 97 are suitably flared, as is also the edge of the counterbore 86a so that the parts will telescope together easily.

In this form of the invention, after the ball has been deposited in the upper part 97 of the sleeve 87 the die block descends, the punch 51 being first arrested by contact with the ball of lead or the like while the block and associated washer 43 and collar 95 continue down. The collar 95 proceeds to telescope over the top 97 of the sleeve 87 and when it is slightly telescoped therewith, the washer 43 strikes the punch flange 54 and carries the same downward, the punch 51 forcing the metal of the ball to flow about the head of the nail in the manner previously described. The difference, however, lies in the fact that the sleeve 87 performs the function of a die insofar as it forms the outer periphery of the cap. The collar 95 in this form of the invention has no nail cap forming function. The lower end 96 of the collar 95 assists in the proper alignment of the parts and, together with the upper part of the table 85, provides desired lateral support to the sleeve 87 during the exertion of the die pressure.

Thereafter, the die block 38 is raised, the nail however remaining within the sleeve 87 by virtue of the friction between the outer periphery of the cap and the bore of the sleeve 87. The lower part 99 of the sleeve 87 engages rollers 100 carried by the fork end 100a of a lever 101 stationarily pivoted at 102 to the table 85. The lever 101 is adapted to be swung by suitable means (not shown) in a direction to depress the sleeve 87 against the action of the spring 93 until the top 97 of the sleeve is below the cap formed on the nail 23. The table may be indexed away from under the block 38 at any time after the die punch 51 and collar 95 are clear of the die mechanism of the table 85. The table is indexed until the set of dies of which that shown at 91 is one, is at station D, where the mechanism such as that described above (Figure 6) may be employed to dispose of the capped nails.

It is to be appreciated that the spring 93 and the lever 101 may be omitted and the sleeve 87 made rigid with the table 85, or at least not movably mounted therein, and the knock-out pins 72 relied upon to overcome the resistance between the nail caps and the sleeves 87 in ejecting the nails therefrom into the receptacle 74. With this form of the invention, it is to be appreciated that the knock-out pins 59 are not employed.

In accordance with still another form of the invention (Figure 10), the table 103 has a bore 104 in which is snugly received the stem 105 of a die member 106. The bottom of the table 103 is counter-bored at 107 to receive the head 108 of the die member 106. The upper part of the table 103 is also counter-bored at 109 to provide a circumferential inner wall spaced from the stem 105 and projecting thereabove to such an extent as to provide a retainer for a ball (in dotted lines) of lead or the like from which the cap is to be formed.

The die block 38 in this form of the invention may be substantially identical with those previously referred to, but in this form a modified collar 110 is employed. The punch 51, as before, is arranged to have a lost motion with respect to the block 38 and to telescope within the collar 110. The collar 110 is formed with its lower end dimensioned to telescope about the stem 105 and within the counter-bore 109 in the table 103. For the purpose of facilitating guiding, the upper edge of the counter-bore is bevelled as shown at 111.

It will be observed that the lower end 112 of the collar 110 is flared at 113. The purpose of this flaring is to enable the surface to cam the ball radially toward the axis of the collar 110 from whatever position the ball may be in, within the counter-bore 109 of the table 103. It is quite evident that when the ball is deposited in said counter-bore, it is most likely to take a position where it rests adjacent the periphery of the nail head and engages the wall of the counter-bore 109.

However, irrespective of what position the ball may occupy, its movement to a point within the bore 114 of the collar 10 is assured by the provision of the flared lower part 113 thereof. Said flared portion also facilitates the telescoping of the collar 110 about the die stem 105.

After the collar 110 is first telescoped over the stem 105, the flange 54 of the punch 51 is engaged by the washer 43 and is rammed down so as to cause the material of which the ball is formed to flow into the shape of a cap about the nail head as in the manner first described above.

The capped nail will cling to the wall of the bore 114 as in the first described form of the invention herein and will be elevated therewith. In this form of the invention, the top knock-out pins 59 are employed to release the capped nails from the collars 110, and the deflector means 61 are also employed to deflect the gravitating capped nails into the proper keg at a side. After the table is indexed to station D, the auxiliary knock-out elements 72 come into play to eject upward into the receptacle 74 any nails which for any reason were not removed from the stem 105 by the collars 110.

Instead of using deflectors or deflecting means 61, the axis of movement of the plunger 51 and accordingly the axis of the lower die could be inclined to the vertical, as by sloping upwardly and outwardly from the axis of rotation of the table 1. Then, when the pins 59 release the capped nails from the collars 45 or 95, as the case may be, the nails will fall substantially vertically and will thus be precluded from returning to the lower dies.

The nail may be of any desired design but is preferably as illustrated, with a substantial ta-

pered portion 55 free to form a wedge portion for facilitating the final driving-in of the capped nail in the corrugated sheet metal roofing or other material to be secured. The wedge portion also tightly wedges in the opening in the roofing to hold the nail more tightly therein.

The volume of the ball or the like of capping material will not exceed a predetermined amount for which the mechanisms will be adjusted. The balls are formed in dies or molds and are of substantial uniformity. With the apparatus so set, the caps formed will cling to the collars 45 and 95. Should any mass be of insufficient volume to cause such clinging, the resulting cap will be defective and the capped nail will remain with and later will be ejected from the lower die.

Instead of using a nail with a tapered or other shoulder, such as that illustrated herein at 55, the spacing of the head of the nail from the top of the lower die could be effected in another way. That is, spacing elements such as the pins 81 could project upwardly from the top of the lower die to an extent equal to the thickness of lead which is to be formed under the head of the nail. The nail could be of the common type comprising merely a head and a shank joined directly to the head at the bottom surface thereof. That is, the head could be in the form of a substantially flat disc, and the shanks could be of generally cylindrical form and extend directly from one surface of the disc. Thus, when the nail shank is dropped into the lower die, the pins will automatically arrest the head of the nail at the correct distance from the top of the lower die to insure the proper thickness of lead being forced under the head of the nail. Such pins will of course be of suitable strength to withstand the die pressure and may be made of steel or other metal or suitable alloy. The pins may be at any suitable distance radially from the bore of the die, but are preferably arranged substantially at the bore so as to be disposed close to the shank of the nail when the head of the nail rests on the pins. The pins may be of slight girth so as not to materially reduce the amount of lead under the head of the nail. The number and shape of such pins may be varied as desired and, also, shapes of other than pin form may be employed.

In the fabrication of nails of the type illustrated embodying a tapered shoulder, it may sometimes occur that the shoulder is made too small, so that the head of the nail may engage or be disposed too close to the top of the lower die to insure a proper thickness of lead under the head. Provision against such a contingency may be made by the use of pins such as those shown at 81, projecting upwardly from the die an extent equal to the minimum permissible thickness of capping material under the nail head. These pins or other suitable spacing means would be arranged to engage the lower side of the head, or adjacent portion of the shoulder on any nail whose shoulder is too small, and thus space the under side of the nail head the proper distance from the top of the lower die to insure the entry of a proper thickness of capping material such as lead.

The number and arrangement of pins 81 in accordance with the forms just referred to may be varied as desired, as set forth above in connection with the form illustrated in Figure 8.

I am aware that many changes may be made and numerous details of construction may be varied through a wide range without departing from the principles of this invention, and I, therefore, do not purpose limiting the patent granted hereon otherwise than necessitated by the prior art.

I claim as follows:

1. In a machine for capping nails and other fastening elements, a male die formed to support a blank element, a female die cooperative therewith to press capping material onto the element, said female die having a peripheral wall to which the capped element may cling upon separation of said dies, means for releasing the capped element from the female die and auxiliary means for ejecting from the male die any capped element not separated from the male die by the female die.

2. In a machine for capping nails and other fastening elements, a male die formed to support a blank element, a female die cooperative therewith to press capping material onto the element, said female die having a peripheral wall to which the capped element may cling upon separation of said dies, and means for ejecting from the male die any capped element not separated from the male die by the female die.

3. In a machine for capping nails and other fastening elements, a die formed to support a blank element, a die cooperative therewith to press capping material onto the element, one of said dies having a peripheral wall to which the capped element may cling upon separation of said dies, means for releasing the capped element from said wall and auxiliary means for ejecting from the other die any capped element not clinging to said one die.

4. In a capping machine for nails and other fastening elements, means defining a chamber, a die mounted in said chamber and projecting beyond the upper end thereof, a sleeve surrounding the upper end of said die and extending into said chamber, yielding means within said chamber and engaging said sleeve for urging the same upwardly, said sleeve and the wall of said chamber having cooperating shoulders engageable with each other for limiting the upward movement of said sleeve, said sleeve projecting above said die when said shoulders are engaged, providing a receptacle for capping material, and a die for cooperating with said first mentioned die.

5. A capping machine for nails and like fastening elements, comprising a die formed to support an element blank, displaceable means for supporting capping material in engagement with an end of the blank, die means complementary to said die, said die and die means being relatively approachable to such an extent as to completely displace the first means from the capping material and form the material into a cap about said end.

6. A capping machine for nails and like fastening elements, comprising a die formed to support an element blank, means for supporting capping material in engagement with an end of the blank, means for separating the material from the first means and formed to embrace said die, and a die cooperating with the first die and the second means for pressing the material into a cap about said end.

7. A capping machine for nails and like fastening elements, comprising a die for supporting an element blank, means spaced from said die for receiving and retaining capping material on an end of the blank, and a recessed die structure formed to telescope said die and having a flared inner surface engageable with said material for displacing said material inwardly from said re-

taining means to imprison said material within said die structure.

8. A capping machine for fastening elements, comprising a die formed to support an element blank, means for supporting a ball of capping material in engagement with an end of the blank, and complementary die means recessed to receive the ball and said die and cooperating with said die independently of the first means in pressing the ball into a cap about said end.

9. In a machine for capping fastening elements and the like, a die formed to support an element blank, means for retaining capping material over an end of the blank, a reciprocal head, a die mounted in said head for limited reciprocal movements and cooperative with said head and first die in pressing the capping material over said end, means for engaging said reciprocal die during movement of said head in a direction away from the first die for ejecting a capped element clinging to said head, and means movable in the path of the ejected element for deflecting the same.

10. A hollow die having an imperforate inner side wall, a stem die telescoped in said hollow die and having an imperforate surface transverse to said wall and forming with the interior surface of said hollow die a substantially imperforate cup, another stem die slidably engageably axially within said wall in juxtaposition with the first stem die to define with the hollow and first stem dies a space for receiving a mass of relatively soft capping material together with the head of a fastening element, the second stem die having an axial passage to receive the shank of the element, said stem dies being relatively approachable within said hollow die and cooperating with said interior surface to force the mass to flow and enclose the element head, said second stem die and said hollow die being completely separable from each other, and said first stem die and said hollow die being relatively movable in such directions as to completely eject the head-enclosed element from said hollow die.

11. Capping apparatus for fastening elements and the like, comprising a hollow die having an imperforate cylindrical inner side wall, a second die telescopically fitted axially in said hollow die and having an imperforate concave end surface forming with the interior surface of said hollow die a substantially continuous cylindrical round bottomed recess, a third die having an end arranged to telescopically fit in said recess in opposed relation to the second die and having an axial passage for receiving the shank of a headed fastening element, said end being reduced at its outer periphery to define between said inner side wall and said end an annular pocket, the second and third dies being relatively approachable so that when a mass of relatively soft material and the head of the fastening element are disposed in the hollow die and between the second and third dies, the mass is distorted into a substantially smooth crowned skirted cap substantially enclosing the head of the fastening element.

12. Capping apparatus for fastening elements and the like, comprising a hollow die having an imperforate cylindrical inner side wall, a second die telescopically fitted axially in said hollow die and having an imperforate concave end surface forming with said cylindrical wall a substantially continuous cylindrical round bottomed recess, a third die having an end arranged to telescopically fit in said recess in opposed relation to the second die and having an axial passage for receiving the shank of a headed fastening element, said end being reduced at its outer periphery to define between said inner side wall and said end an annular pocket, the second and third dies being relatively approachable so that when a mass of relatively soft material and the head of the fastening element are disposed in the hollow die and between the second and third dies, the mass is distorted into a substantially smooth crowned skirted cap substantially enclosing the head of the fastening element.

13. Capping apparatus for fastening elements and the like, comprising a hollow die having an imperforate cylindrical inner side wall, a second die telescopically fitted axially in said hollow die and having an imperforate concave end surface forming with the interior surface of said hollow die a substantially continuous cylindrical round bottomed recess, a third die having an end arranged to telescopically fit in said recess in opposed relation to the second die and having an axial passage for receiving the shank of a headed fastening element, said end being reduced at its outer periphery to define between said inner side wall and said end an annular pocket, the second and third dies being relatively approachable so that when a mass of relatively soft material and the head of the fastening element are disposed in the hollow die and between the second and third dies, the mass is distorted into a substantially smooth crowned skirted cap substantially enclosing the head of the fastening element, said third die being separable from said hollow die away from the cap and said second die being movable against the crown of the cap to expel the capped element from the hollow die.

14. A hollow die having an imperforate inner side wall, a stem die telescoped in said hollow die and having an imperforate surface transverse to said wall and forming with the interior surface of said hollow die a substantially imperforate cup, another stem die slidably engageable axially within said wall with an end of said other stem die in juxtaposition with the first stem die to define with the hollow and first stem dies a space for receiving a mass of relatively soft capping material together with the head of a fastening element, the second stem die having an axial passage to receive the shank of the element, said stem dies being relatively approachable within said hollow die and cooperating with said interior surface to force the mass to flow and enclose the head, the inner periphery of said end being disposed adjacent the head when the shank is so received and being enlarged to form said material into a skirt embracing the shank, said second stem die and said hollow die being completely separable from each other, and said first stem die and said hollow die being relatively movable in such directions as to completely eject the head-enclosed element from said hollow die.

15. A hollow die having an imperforate inner side wall, a stem die telescoped in said hollow die and having an imperforate surface transverse to said wall and forming with the interior surface of said hollow die a substantially imperforate cup, a second stem die slidably engageable axially within said wall with an end of said second stem die in juxtaposition with the first stem die to define with the hollow and first stem dies a space for receiving a mass of relatively soft capping material together with the head of a fastening element, said second stem die having an axial passage to receive the shank of the element, said

stem dies being relatively approachable within said hollow die and cooperating with said interior surface to force the mass to flow and enclose the head, the inner periphery of said end being enlarged and the outer periphery of said end being reduced, to form said material into an inner skirt embracing the shank and an outer skirt, said second stem die and said hollow die being completely separable from each other, and said first stem die and said hollow die being relatively movable in such directions as to completely eject the head-enclosed element from said hollow die.

JOHN M. UPTON.