(No Model.)

J. F. FAULKNER & R. CAMPBELL.

TROLLEY WIRE HANGER.

No. 590,141. Patented Sept. 14, 1897.

Fig. 1.

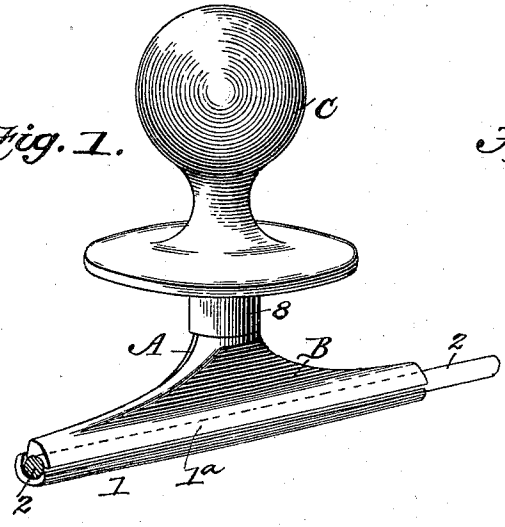

Fig. 2.

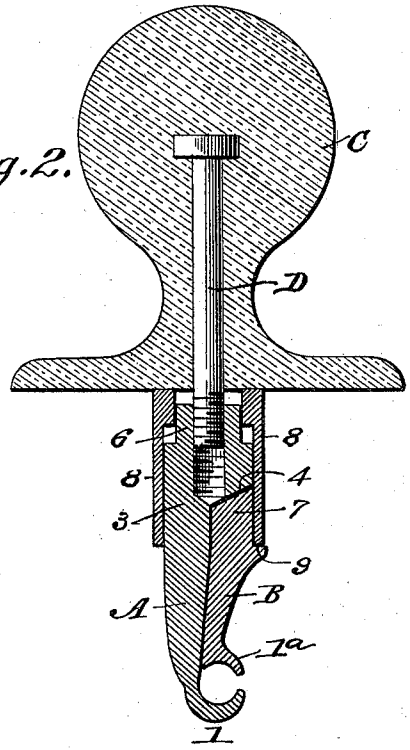

Fig. 3.

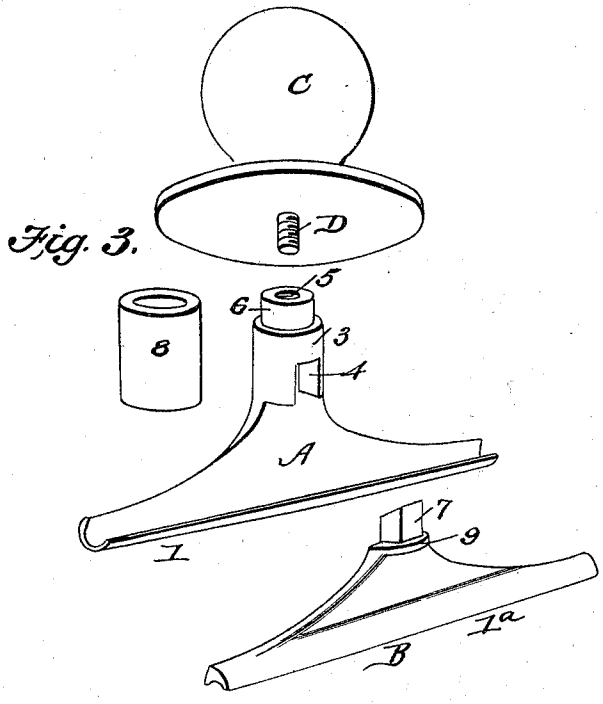

Fig. 4.

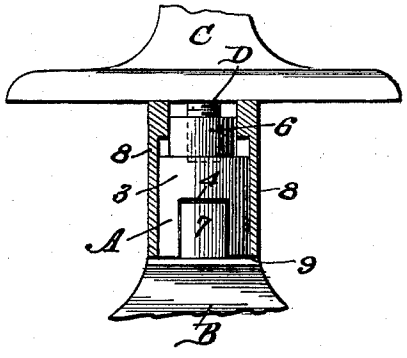

WITNESSES:

M. A. Goudel

Amos W. Hart

INVENTORS

John F. Faulkner.

Royer Campbell.

BY Munn & Co.

ATTORNEYS.

THE NORRIS PETERS CO., PHOTO-LITHO., WASHINGTON, D. C.

UNITED STATES PATENT OFFICE.

JOHN F. FAULKNER AND ROYER CAMPBELL, OF SAN ANTONIO, TEXAS.

TROLLEY-WIRE HANGER.

SPECIFICATION forming part of Letters Patent No. 590,141, dated September 14, 1897.

Application filed March 8, 1897. Serial No. 626,560. (No model.)

To all whom it may concern:

Be it known that we, JOHN F. FAULKNER and ROYER CAMPBELL, citizens of the United States, residing at San Antonio, in the county of Bexar and State of Texas, have invented new and useful Improvements in Trolley-Wire Hangers, of which the following is so full, clear, and exact a description as will enable others skilled in the art to which our invention appertains to make and use the same, reference being had to the accompanying drawings, in which—

Figure 1 is a perspective view of the hanger. Fig. 2 is a central section of the same. Fig. 3 is a perspective view of the several parts of the hanger detached from each other. Fig. 4 is a sectional side view of the body or middle portion of the hanger.

The object of the invention is to provide a clamp for trolley-wires by the use of which danger from broken insulator-bolts and consequent damage to the trolley and the wire and the span-wires will be entirely avoided.

Another object of the invention is to provide a clamp for trolley-wires which may be easily and quickly adjusted by one not particularly skilled in the art.

The jaws A and B are attached to an insulator C by means of a screw D. The main jaw A (see Figs. 1 and 3) of the hanger has a curved lip 1 for supporting a trolley-wire 2, and the smaller removable jaw B has a corresponding lip or flange 1^a, fitting upon the said wire 2, so that the latter may be held firmly between the jaws.

The central portion 3 of the main jaw A is cylindrical and provided with a rectangular socket 4, Fig. 3, in its under side, a central threaded bore 5, and a reduced portion or tenon 6. For convenience of description, the said part 3 will be termed a "post." The recess or socket 4 receives a corresponding tenon 7 on the jaw B, which tenon has a base-shoulder, as shown. A cylindrical sleeve 8, Fig. 3, fits somewhat loosely on the cylindrical post 3 of jaw A and incloses also the tenon 7 of jaw B, the lower end of said sleeve resting on the shoulder 9 of said tenon, as shown. The bore 5 in post 3 receives the threaded end of the cylindrical screw D, whose head and body are secured in the insulator C.

It is apparent that upon applying the rigid wire-suspending jaw A and removable jaw B to a wire 2 and then rotating the insulator C the screw D will draw the parts A B together, so as to clamp the wire 2 firmly between the lips or flanges 1 and 1^a—that is to say, the rigid jaw A is drawn upward at the same time the movable jaw B is forced downward, which operation is caused by the sleeve 8 abutting, Fig. 4, the under side of the insulator C and the shoulder 9 of jaw B simultaneously, whereby the post 3, which is shorter than the sleeve 8, is allowed to slide up into the sleeve, while the latter resists upward movement of jaw B.

The point which is usually first to break in a trolley-clamp is the bolt which fastens the insulator to the clamp. When this is the case, the clamp drops down and turns over on the wire and hangs there, a menace to the trolley, threatening its destruction, its derailment, and the destruction of the span-wire, and the possible fracture of the trolley-pole, or even the trolley-wire. By the use of a clamp such as has been hereinbefore described these things will be entirely obviated, as the clamp will drop down and turn over and the sleeve will drop off, leaving the jaws free to separate, when they will, by reason of the vibration of the wire, drop to the pavement. It will be observed that the dip is very slight in the outer jaw, so that the slightest vibration will throw the clamp off the wire as soon as the locking device is released, as would be the case should the insulator-bolt become broken.

We claim—

1. In a trolley-clamp, the combination of a rigid jaw, having a slight dip to receive the wire; with a sliding jaw, having a lip at its outer end to engage the trolley-wire and adapted to slide upon the rigid jaw and means for holding the two jaws together and for holding the sliding jaw into contact with the wire and for clamping the wire between the two jaws, the entire structure being such that any rupture of the mechanism for holding the two jaws into contact with the trolley-wire, will cause the clamp to fall off from the trolley-wire by reason of its own automatic separation, substantially as described.

2. In a clamp for trolley-wires, a rigid jaw provided with a post, recessed and provided

with a screw-threaded hole; in combination with a sliding jaw having a projection adapted to fit within a recess in the post of the rigid jaw and provided with a shoulder and a sleeve adapted to encircle the post on the rigid jaw and the projection or tenon on the sliding jaw, and abutting against the shoulder on the sliding jaw, substantially as and for the purposes described.

3. In a clamp for trolley-wires, a rigid jaw provided with a post recessed and provided with a screw-threaded hole; in combination with a sliding jaw having a projection adapted to fit within the recess in the post of the rigid jaw and provided with a shoulder and a sleeve longer than the post on the rigid jaw, and adapted to encircle the post on the rigid jaw and the projection or tenon on the sliding jaw, and abutting against the shoulder on the sliding jaw, substantially as and for the purposes specified.

4. In a clamp for trolley-wires, a rigid jaw, provided with a post recessed and provided with a screw-threaded hole; in combination with a sliding jaw having a projection adapted to fit within the recess in the post on the rigid jaw and provided with a shoulder and a sleeve adapted to encircle the post on the rigid jaw and the projection on the sliding jaw and abutting against the shoulder on the sliding jaw, the distance between the face of the shoulder and the upper end of the post being less than the distance between the bottom of the collar and the top of the collar, substantially as described, whereby the clamp of the insulator down upon the upper end of the collar will securely hold the wire, as described.

In testimony whereof we affix our signatures in the presence of two witnesses.

JOHN F. FAULKNER.
ROYER CAMPBELL.

Witnesses:
J. B. FLANNERY, Jr.,
W. L. STEVENS.