Oct. 3, 1950 E. G. LINDER 2,524,532

VARIABLE COUPLING TUNABLE MICROWAVE RESONATOR

Filed Feb. 27, 1946 2 Sheets-Sheet 1

Fig. 3

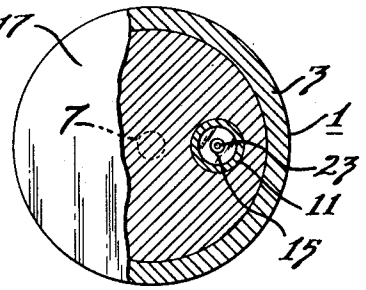

Fig. 1

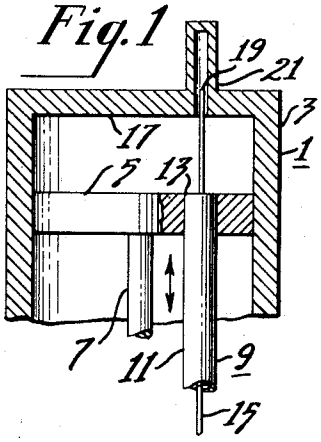

Fig. 2

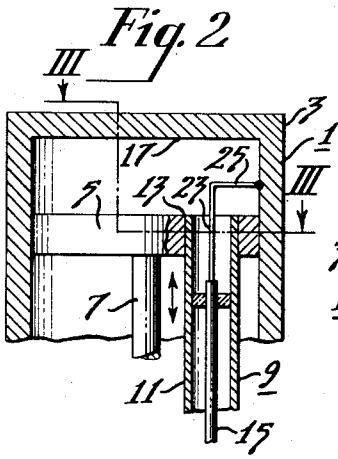

Fig. 4

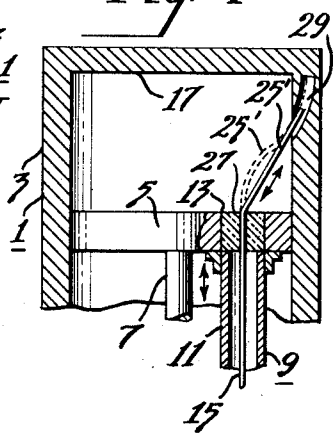

Fig. 5

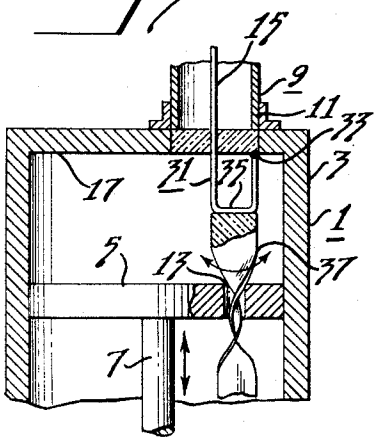

Fig. 6

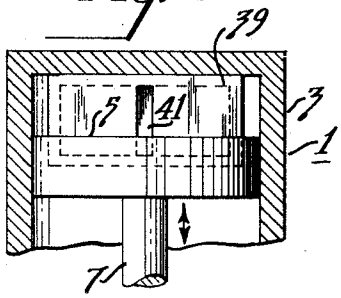

INVENTOR.
Ernest G. Linder

BY C. D. Tuska
ATTORNEY

Oct. 3, 1950 E. G. LINDER 2,524,532

VARIABLE COUPLING TUNABLE MICROWAVE RESONATOR

Filed Feb. 27, 1946 2 Sheets-Sheet 2

Fig. 7

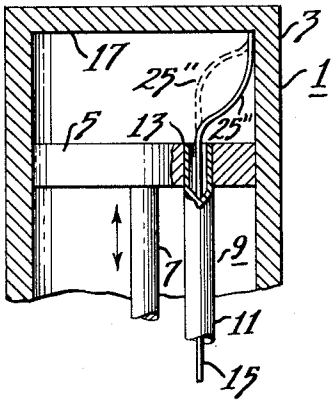

Fig. 8

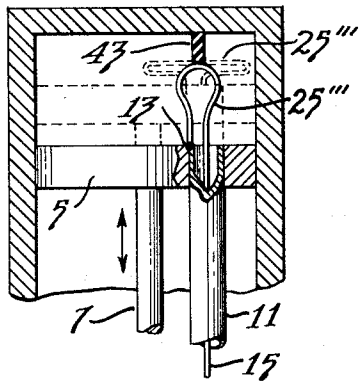

Fig. 9

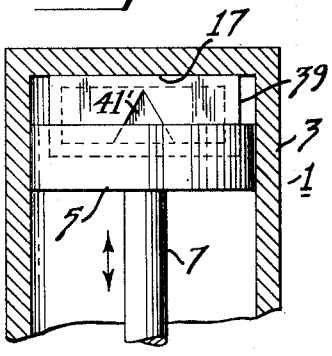

Fig. 10

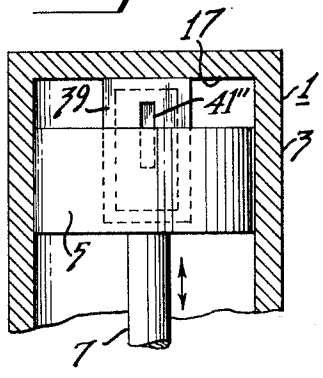

INVENTOR.
Ernest G. Linder
BY
C. D. Ruska
ATTORNEY

Patented Oct. 3, 1950

2,524,532

UNITED STATES PATENT OFFICE

2,524,532

VARIABLE COUPLING TUNABLE MICROWAVE RESONATOR

Ernest G. Linder, Princeton, N. J., assignor to Radio Corporation of America, a corporation of Delaware

Application February 27, 1946, Serial No. 650,710

2 Claims. (Cl. 178—44)

1

This invention relates generally to microwave apparatus and more particularly to improved variable-coupling wide-frequency-band tunable microwave resonators of the type utilizing a movable piston wherein adjustment of the piston for tuning the resonator simultaneously adjusts the coupling characteristics of a coupling element projecting into the resonator.

It has been customary to utilize adjustably tuned microwave resonators as frequency controlling or filter elements in microwave generators, mixers and transmission systems. The resonant frequency of such microwave resonators may be varied by longitudinal adjustment of a conductive piston enclosed within the resonator shell. Well known methods of coupling into or out of such adjustable resonators include the use of microwave probe elements, coupling loops and adjustable aperture devices, depending upon the characteristics of the circuit to which the resonator is coupled. It is frequently advantageous to be able to vary the degree of coupling between an external circuit and the microwave resonator as the resonator is tuned through its useful frequency band. In particular, in reflex oscillators of the type including an electron reflecting electrode, it is desirable that the coupling coefficient between the oscillator and the load circuit remain substantially constant or decrease as the oscillator frequency is increased. A conventional coupling loop, probe or aperture device coupled into the oscillator cavity normally will provide an increased coupling coefficient as the frequency is increased, thereby providing non-linear loading of the oscillator over its useful frequency range.

The instant invention comprises several embodiments of microwave apparatus wherein the frequency of a microwave resonator is varied by longitudinal adjustment of a piston operative therein, and wherein the effective length of a microwave coupling probe, or the effective coupling of a coupling loop, as well as the effective opening of an aperture device is simultaneously adjusted by movement of the tuning piston. The invention as disclosed provides means for tuning a microwave generator and simultaneously adjusting the coupling thereto from an external coaxial line or waveguide device.

Among the objects of the invention are to provide an improved method of and means for simultaneously adjusting the tuning and coupling of a microwave resonator device. Another object of the invention is to provide a method of and means for tuning a microwave resonator over a

2

relative wide frequency range and for simultaneously adjusting the coupling coefficient of a coupling element connected to an external circuit. A further object of the invention is to provide an improved cylindrical microwave resonator including a longitudinally adjustable tuning piston, wherein adjustment of the piston simultaneously adjusts the effective coupling to the resonator of a microwave coupling probe. A still further object of the invention is to provide an improved cylindrical microwave resonator including a longitudinally adjustable tuning piston, wherein adjustment of the piston simultaneously adjusts the effective coupling to the resonator of a microwave coupling loop. Another object is to provide an improved cylindrical microwave resonator including a longitudinally adjustable tuning piston, wherein adjustment of the piston simultaneously adjusts the effective opening of an aperture device for coupling an external circuit to said resonator.

An additional object is to provide an improved variable-coupling wide-frequency-band microwave resonator including a frequency adjusting piston wherein adjustment of the tuning piston simultaneously varies in opposite sense the resonant frequency of said resonator and the coupling coefficient of an element coupling said resonator to an external circuit. A further object is to provide a constant-coupling wide-frequency-band microwave resonator including a movable tuning piston wherein adjustment of the tuning piston varies the resonant frequency of said resonator without substantial variation of the coupling coefficient of an element coupling said resonator to an external circuit. Another object is to provide an improved arrangement for simultaneously adjusting the tuning and coupling of a microwave resonator without the necessity of sliding contacts in the coupling element.

The invention will be described in greater detail by reference to the accompanying drawing, of which Figure 1 is a cross-sectional elevational view of a first embodiment of the invention; Figure 2 is a cross-sectional elevational view of a second embodiment of the invention; Figure 3 is a plan, partially cross-sectional, view along the section line III—III of the device shown in Fig. 2; Figure 4 is a cross-sectional elevational view of a third embodiment of the invention; Figure 5 is a cross-sectional elevational view of a fourth embodiment of the invention; Figure 6 is a cross-sectional elevational view of a fifth embodiment of the invention; Figure 7 is a schematic diagram of a modification of the device shown in Fig. 4;

Figure 8 is a schematic diagram of a modification of the device shown in Fig. 5; Figure 9 is a schematic diagram of a first modification of the device shown in Fig. 6; and Figure 10 is a cross-sectional view of a second modification of the device shown in Fig. 6. Similar reference characters are applied to similar elements throughout the drawing.

Referring to Figure 1 of the drawing, a microwave resonator 1 includes a cylindrical shell 3 having a longitudinally adjustable piston 5 disposed therein. The piston position may be adjusted by means of a central shaft 7 actuated by any conventional actuating device, not shown. A coupling coaxial line 9 has its outer conductor 11 fitted into an aperture 13 in the piston 5. The inner conductor 15 of the coaxial line 9 is insulated from the outer conductor 11 and is longitudinally movable with said outer conductor and the piston 5 as the piston position is varied. The inner coaxial line conductor 15 extends into the cavity formed between the resonator wall 3 and the inner face of the piston 5, and as the piston and coaxial line are advanced toward the end resonator wall 17, the exposed end 19 of the inner coaxial line conductor 15 telescopes within an outwardly projecting portion 21 of the resonator wall 3.

Thus, as the resonant frequency of the resonator 1 is increased by advancement of the piston face toward the end resonator wall 17, increasingly shorter portions of the inner conductor 15 are exposed to the resonator cavity, thereby correspondingly tending to reduce the coupling between the cavity resonator and the coupling coaxial line 9. Depending upon the circuit parameters, the coupling coefficient to an external circuit, not shown, may be maintained substantially constant throughout the useful frequency range of the resonator, or the coupling coefficient may be reduced as the frequency is increased.

The device illustrated in Figures 2 and 3 is similar to that described by reference to Figure 1, with the exception that the inner coaxial line conductor 15 includes a telescoping conductor portion 23 formed into an L-shaped loop 25 which is terminated at the adjacent inner wall of the resonator shell 3. Longitudinal adjustment of the tuning piston 5 therefore exposes varying portions of the coupling loop 25 without movement of the conductor comprising the loop.

The device illustrated in Figure 4 is similar to the devices shown in 1, 2 and 3 with the exceptions that an insulator 27 supports the coaxial line 9 within the aperture 13 in the piston 5, and the coupling loop is distorted in shape as indicated by the dashed lines 25' as the piston is longitudinally adjusted for tuning the resonator. The end of the coupling loop 25—25' extends into an obliquely positioned depression 29 in the side wall 3 of the resonator.

The device illustrated in Figure 5 provides means whereby longitudinal adjustment of the tuning piston 5 within the resonator shell 3 provides rotation of a coupling loop 31 terminating the coaxial transmission line 9 within the resonator cavity. The coupling loop 31 preferably is of U shape and is terminated at the point 33 on the inner wall of the resonator. The lower portion 35 of the coupling loop is secured to a twisted low-loss semi-rigid insulating strip 37, of polystyrene, mica, or similar materials. The twisted insulated strip 37 extends through the aperture 13 in the piston 5. Longitudinal adjustment of the piston simultaneously varies the frequency of the cavity resonator 1 and twists the coupling loop 31 to provide adjustment of the coupling coefficient between the coaxial line 9 and the cavity resonator 1.

Figure 6 illustrates apparatus wherein adjustment of the frequency of a cavity resonator is provided simultaneously with adjustment in the opposite sense of the coupling coefficient between said cavity resonator and a waveguide system coupled thereto. The resonator cavity opens into a waveguide 39 through a fixed longitudinal aperture 41. As the piston 5 is advanced toward the end wall 17 of the cavity resonator, the side face of the piston gradually reduces the effective length of the coupling aperture 41 thereby correspondingly reducing the coupling coefficient between the waveguide and the resonator cavity as the resonator frequency is increased.

Figure 7 shows a modification of the embodiment of the invention described by reference to Figure 4 wherein the end of the looped inner conductor is fastened to the inner surface of the resonator whereby the conformation of the loop 25'' is varied as the tuning piston position is changed. The device shown in Figure 7 is preferable to that shown in Figure 4 since a permanent contact is provided at the end of the coupling loop, thereby minimizing erratic contact effects which are usually quite objectionable at microwave frequencies.

Figure 8 shows a modification of the devices described by reference to Figures 1 to 5 wherein the shape of the coupling loop is varied as the piston position is changed. The coupling loop 25''' is attached to an insulating member 45 projecting from the end of the resonator chamber whereby the loop is flattened, and hence the coupling is varied, as the piston is advanced. This arrangement permits various non-linear coupling characteristics, depending upon the original loop conformation.

Figure 9 shows a modification of the embodiment of the invention described heretofore by reference to Figure 6, wherein the aperture shape is other than rectangular. For example, the triangular aperture 41' illustrated in Figure 9 provides a non-linear coupling characteristic. Other aperture shapes may be provided in accordance with known microwave technique.

Figure 10 is a further modification of the embodiment of the invention described by reference to Figure 6 wherein the aperture extends along the magnetic axis of the waveguide 39, adjustment of the piston providing control of the length of said magnetic axis instead of variation of the length of the electrical axis as in the device of Figure 6.

It should be understood that the variable- or constant-coupling systems disclosed herein may be employed as either output or input coupling elements of associated circuits and that simultaneous or separate control of a plurality of such coupling elements may be provided for a single cavity resonator or for a plurality of cavity resonators. By proper proportioning of the adjustable resonator and the associated coupling probe, loop or aperture device, the coupling coefficient to an external circuit may be maintained substantially constant or varied in opposite sense to the adjustment of the resonator frequency.

Thus the invention disclosed comprises several embodiments of cavity resonator, wide-frequency-band, microwave devices providing tuning by adjustment of a tuning piston wherein such piston adjustment provides corresponding

control of the coupling coefficient between said resonator and an external circuit.

I claim as my invention:

1. A variable-coupling wide-frequency-band microwave resonator including a hollow resonator, means including a movable piston having an aperture therein disposed within said resonator for tuning said resonator, and a coupling element extending into said resonator for microwave coupling to said resonator, said coupling element including a coupling loop and an integral twisted insulating strip, said strip extending into said resonator through said aperture in said piston, whereby adjustment of said tuning piston simultaneously varies in opposite sense the resonant frequency of said resonator and the coupling coefficient of said element, said strip and said loop being rotated as said piston is adjusted longitudinally.

2. A variable-coupling wide-frequency-band microwave resonator including a hollow resonator, means including a movable piston having an aperture therein disposed within said resonator for tuning said resonator, a coupling loop extending into said resonator for microwave coupling to said resonator, and means operable by said apertured piston for rotating said loop whereby adjustment of said tuning piston simultaneously varies in opposite sense the resonant frequency of said resonator and the coupling coefficient of said element.

ERNEST G. LINDER.

REFERENCES CITED

The following references are of record in the file of this patent:

UNITED STATES PATENTS

Number	Name	Date
2,253,503	Bowen	Aug. 26, 1941
2,281,550	Barrow	May 5, 1942
2,311,520	Clifford	Feb. 16, 1943
2,401,634	Gubin	June 4, 1946
2,411,424	Gurewitsch	Nov. 19, 1946
2,417,542	Carter	Mar. 18, 1947
2,426,177	Carlson	Aug. 26, 1947
2,427,107	Landon	Sept. 9, 1947