# United States Patent

**Plasser et al.**

[15] **3,691,957**

[45] **Sept. 19, 1972**


[54] **MOBILE APPARATUS FOR LAYING AND REMOVING TRACK TIES ALONG A RIGHT OF WAY**


[72] Inventors: **Franz Plasser; Josef Theurer,** both of Johannesgasse 3, A1010 Vien, Austria



[22] Filed: **May 5, 1971**

[21] Appl. No.: **140,421**

[30] **Foreign Application Priority Data**

June 1, 1970 Austria .....4894

[52] **U.S. Cl.** .....**104/9,** 214/91, 214/518

[51] **Int. Cl.** .....**E01b 29/06**

[58] **Field of Search**.....104/2, 9, 1, 6


[56] **References Cited**

UNITED STATES PATENTS


| | | | |
|---|---|---|---|
| 2,997,001 | 8/1961 | Scheuchzer | 104/2 |
| 3,144,833 | 8/1964 | Christoff et al. | 104/9 |
| 3,330,219 | 7/1967 | Plasser et al. | 104/2 |



*Primary Examiner*—Gerald M. Forlenza
*Assistant Examiner*—Richard A. Bertsch
*Attorney*—Kurt Kelman


[57] **ABSTRACT**


A vertically adjustable tie gripping mechanism is mounted for movement through a path extending in the direction of the right of way between end positions respectively adjacent a rail lifting means and one end of an elongated tie conveyor. A guide supports the mechanism so that it is located centrally between the track rails in one end position wherein the mechanism may be vertically adjusted and rotated to swing the ties between a first position transverse of the right of way and a second position parallel thereto, an intermediate position where the ties are laid or removed, and another end position wherein the ties are deposited on, or received from, the one conveyor end. This one conveyor end is below the path of movement of the tie gripped by the mechanism between the intermediate and other end positions of the mechanism.


**8 Claims, 3 Drawing Figures**

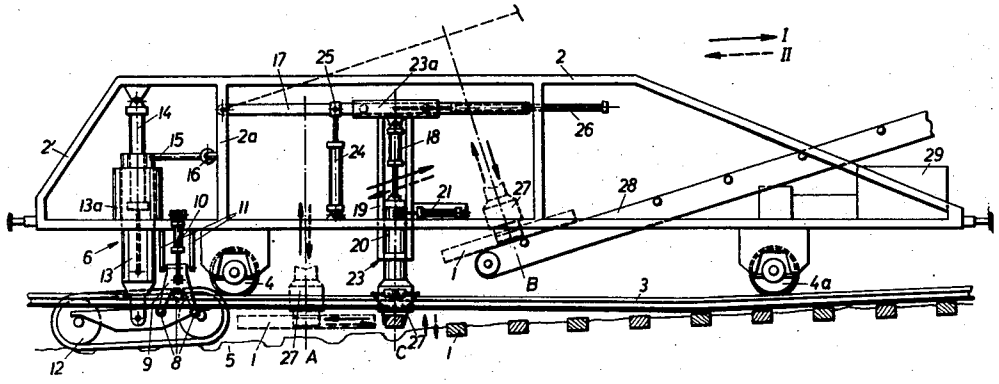

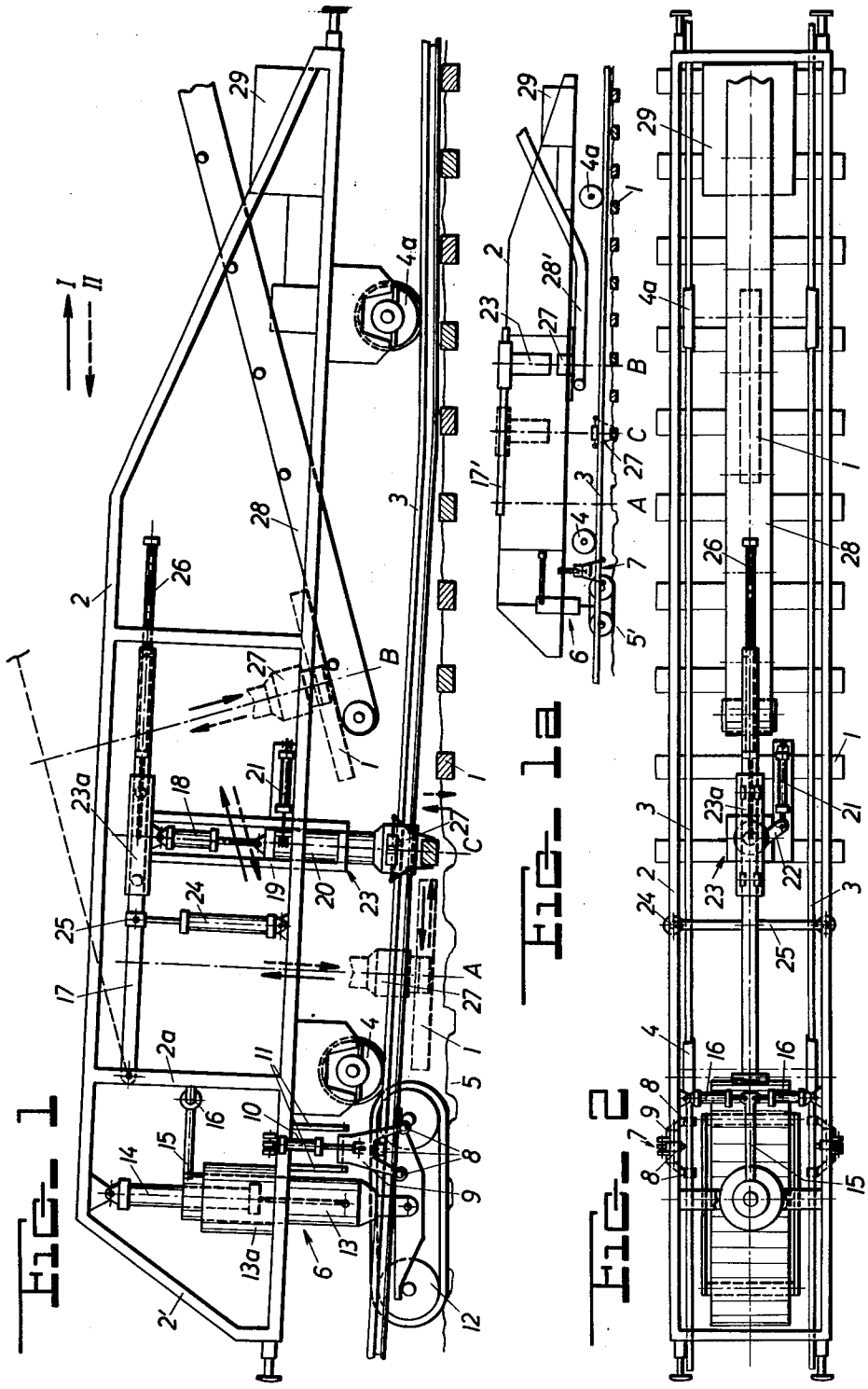


INVENTORS
FRANZ PLASSER
JOSEF THEURER
BY
Kurt Kelman
AGENT

# MOBILE APPARATUS FOR LAYING AND REMOVING TRACK TIES ALONG A RIGHT OF WAY

The present invention relates to improvements in an apparatus mounted for mobility along a right of way of a railroad track including rails mounted on ties, and wherein the right of way comprises a trackless ballast section and an adjacent track section.

The apparatus is of the known type wherein means is arranged in the trackless ballast section for lifting the rails off the ballast and for holding the rails spaced from the ballast, an elongated conveyor means extends in the direction of the right of way for conveying ties to and from the trackless ballast section, with one end of the conveyor means adjacent the trackless ballast section and another end thereof leading to a tie transport car, and a guide means supports a mechanism for gripping ties for movement through a path extending in the direction of the right of way between end positions respectively adjacent the rail lifting means and the one end of the conveyor means. The tie gripping mechanism is vertically adjustable from a first position below the lifted rails to a second position above the rails, and rotatable about a vertical axis for swinging the ties in the first position of the mechanism between a first position transverse of the direction of the right of way and a second position substantially parallel thereto. One of the end positions of the tie gripping mechanism, wherein the mechanism is rotated and vertically adjusted, is located substantially centrally between the rails, and a position intermediate the one and the other end positions of the mechanism serves to lay a selected one of the ties on the ballast and to remove it therefrom.

In known apparatus of this type, an outrigger extends from one end of the tie transport car over the trackless ballast section to support the guide for the tie gripping mechanism and, at its free outer end, the rail lifting and holding means. A roller conveyor for the ties extends from the tie transport car into the track section bridged by the outrigger to a point immediately behind the rail lifting means. Since the ties must be gripped at their point of gravity, which necessitates positioning of the tie gripping mechanism centrally between the rails, the tie conveyor has been arranged laterally adjacent the tie gripping mechanism so that the ties are conveyed longitudinally past the mechanism. Furthermore, since the ties are carried on the transport car in a position extending transversely of the track, a crane or like means is arranged at the end of the conveyor adjacent the transport car to lift the ties off the car, swing them around 90° and then to deposit them on the conveyor, or to effect this tie movement in the reverse order. At the opposite end of the conveyor, the conveyed tie is moved laterally off the conveyor to rest on the ballast centrally between the rails, whereupon it is gripped by the tie gripping mechanism and swung in a horizontal plane around 90° to extend again transversely of the track, in which position it is moved to the position where it is laid on the ballast.

Aside from the necessary length of the roller conveyor, which made the entire apparatus cumbersome and expensive, moving the conveyed ties laterally off the conveyor often placed it off center between the rails and/or with the wrong side facing the ballast, requiring usually manual repositioning of such ties before they could be gripped by the mechanism which swung them around 90°.



In other known apparatus for handling ties during track renewal, a tie transport car runs on the lifted rails, and the ties are lifted from, or deposited on, the ballast by a tie gripping mechanism fixedly mounted on an outrigger mounted on the car. The movement phases of the mechanism between the position where the ties are laid or removed and the car are automatically controlled so that manual handling of the ties is unnecessary. However, since the tie gripping mechanism is fixedly held on the outrigger in the direction of the right of way, the entire apparatus must be moved in this direction to effectuate the necessary movements of the tie, requiring heavy motors and brakes to match the inertia forces of the entire apparatus.

It is a primary object of this invention to improve the first-mentioned type of apparatus so as to eliminate its indicated disadvantages.

This is accomplished in accordance with the invention by positioning the one conveyor end means below the path of movement of the tie gripped by the mechanism between the intermediate and other end positions of the mechanism. In this manner, the tie gripping mechanism is capable of transporting a tie gripped thereby between the intermediate position and both end positions of the mechanism along the guide means.

In such an improved apparatus, the movement of the tie gripping mechanism along the guide means is used to move the ties in the direction of the right of way not only above but also below the lifted rails. This makes it possible to shorten the conveyor means for the ties since the portion thereof extending along the guide becomes superfluous. In addition, since the one conveyor end is below the path of movement of the tie gripping mechanism, the ties may be transferred directly between the conveyor and the mechanism. This produces not only a very compact structure but a simple, fast and effective transfer of the ties between conveyor and ballast because the ties are continuously gripped by the mechanism during this transfer. Furthermore, the turning of the ties in the desired direction is greatly facilitated by simple rotation of the tie gripping mechanism.

According to one preferred feature of the present invention, the conveyor means is downwardly inclined towards the intermediate position of the tie gripping mechanism, and means is provided for pivoting the guide means for the mechanism between a position substantially parallel to the inclined conveyor means and a position substantially parallel to the track plane. In this manner, the lifting stroke of the tie gripping mechanism may be relatively short because the largest part of the path of movement of the ties between a position below the lifted rails and thereabove is effected by upward pivoting of the guide means.

According to another preferred feature, the distance between the one end position of the tie gripping mechanism and the intermediate position thereof is at least equal to the difference between half a tie length and a crib width.

It will be useful to provide automatic control means for the sequential control of the longitudinal, vertical and rotary movements of the tie gripping mechanism,

which control means include limit means responsive to respective end positions of these movements. Preferably, hydraulic means is provided for effectuating the movements, and the control means then includes solenoid valve means controlling the flow of hydraulic fluid to the respective hydraulic moving means and limit switches operating the valve means.

In the preferred embodiment illustrated herein, a compact mobile unit is provided by pivotally mounting the guide means for the tie gripping mechanism on a bridge-like frame having two ends, with the guide means extending from one frame end towards the other frame end. Respective running gears support the frame ends for mobility on the track rails above the trackless ballast section and in the finished track section, respectively. A frame portion extends from one frame end beyond the running gear supporting the one frame end and overhanging the trackless ballast section, and the rail lifting means is mounted on the overhanging frame portion. A full track vehicle runs in the trackless ballast section on the ballast substantially centrally between the rails, and the rail lifting means is supported on the full-track vehicle. The rail lifting means comprises a laterally pivotal rail holding device for movement into and out of engagement with a respective one of the rails, and a rail engaging roller associated with the rail holding device.

The above and other objects, advantages and features of the present invention will become more apparent from the following detailed description of certain now preferred embodiments thereof, taken in conjunction with the accompanying drawing wherein

FIG. 1 is a schematic side view of a mobile apparatus according to one embodiment of this invention;

FIG. 1a is a similar side view, at a reduced scale, of another embodiment; and

FIG. 2 is a top plan view of the embodiment of FIG. 1.

In the drawing, like reference numerals designate like parts operating in a like manner in all embodiments so as to avoid redundancy in the description.

Referring first to FIGS. 1 and 2, there is shown a mobile apparatus for transferring track ties 1 between a trackless ballast section and a tie conveyor. Such apparatus is used in track renewal operations wherein new ties are laid in the trackless ballast section on the ballast underneath lifted rails adjacent a previously finished track section wherein the rails have been mounted on the newly laid ties, or old ties are removed from the trackless ballast section adjacent the old track section whose rails are lifted above the ballast in the trackless section.

The illustrated apparatus comprises a bridge-like frame 2 having two ends respectively above the trackless ballast section and the adjacent track section of the right of way wherealong the apparatus moves either in the direction of arrow I (for removing old ties) or arrow II (for laying new ties). To make the frame mobile, the two frame ends are supported on the rails for mobility thereon by respective running gears 4 and 4*a*.

A frame portion 2′ extends from one frame end beyond the running gear 4 and overhangs the trackless ballast section. This frame portion serves to mount rail lifting means 6 whose upper end is suspended from the frame portion while its lower end is supported on the ballast 5. In operation and as shown in FIG. 1, the rail lifting means will lift the rails and will hold them spaced from ballast 5, lifting the apparatus frame with the rails. The illustrated rail lifting means comprises a laterally pivotal rail holding device 7 for movement into and out of engagement with a respective one of rails 3, 3, and rail engaging rollers 8 associated with the rail holding device and subtending the rails or the rail heads. A hydraulic motor 10 has one end linked to the frame portion 2′ and another end linked to pivotal bracket 9, which carries the rail engaging rollers, for pivoting the rail holding device into and out of engagement with the rail, the bracket 9 being hingedly mounted between support plates 11,11.

A full-track vehicle 12 runs in the trackless ballast section on ballast 5 substantially centrally between the rails 3, 3, and the rail lifting means 6 is supported on the vehicle. The rail lifting means comprises a vertical cylinder 13 supported on the vehicle and a piston rod 14 with piston gliding in the cylinder and having an upper end linked to the frame portion 2′. When hydraulic fluid is supplied to the lower chamber of cylinder 13, the piston and piston rod 14 will be moved up, causing the frame portion 2′ (and frame 2) to be lifted. When the rail holding devices have been pivoted into engagement with the rails to grip the same, the upward movement of the frame will lift the rails and hold the track spaced from ballast 5.

The cylinder 13 is rotatably and vertically slidably journaled in bearing sleeve 13a which is mounted on the frame portion 2′. A radially extending arm 15 projects from the upper end of the cylinder 13 and the free end of arm 15 is linked to the outer ends of the piston rods of a pair of hydraulic motors 16, 16 mounted laterally of the arm 15 and having their cylinders linked to the frame portion 2′. In this manner, selective operation of motors 16 will move the arm 15 in a selected lateral direction, thus rotating the cylinder 13 and steering the full-track vehicle 12 which is attached to cylinder 13.

Pivotally mounted on the bridge-like frame 2 centrally between two vertical frame struts 2*a*, 2*a* is a carrier beam 17 which is pivotal between the positions indicated in full and broken lines in FIG. 1 in a vertical plane passing through the central axis of the right of way between the rails. The carrier beam is a guide means supporting the tie gripping mechanism 23 for movement through a path extending in the direction of the right of way and extends from the one frame end at struts 2*a*, 2*a* towards the other frame end.

The movement of the tie gripping mechanism along carrier beam 17 is effectuated by hydraulic motor 26 mounted on the free end of the beam and operatively connected to guide sleeve 23*a* glidingly movable on and along the carrier beam upon operation of the hydraulic motor 26. The illustrated hydraulic motor 26 is simply a closed axial bore in the free end of the carrier beam and a piston rod slidably mounted in the bore for movement therealong under the pressure of hydraulic fluid supplied to the bore, the piston being connected to the guide sleeve.

The tie gripping mechanism 23 includes a vertical guide sleeve 19 fixed attached to, and downwardly projecting from, guide sleeve 23*a* and a support block 20

vertically glidably and rotatably journaled in guide sleeve **19**. A hydraulic motor **18** is mounted in the upper portion of the guide sleeve **19** and has its respective ends attached to guide sleeve **23***a* and support block **20** so as to make the tie gripping mechanism vertically adjustable upon operation of motor **18**. Furthermore, a radially or tangentially extending arm **22** is fixed attached to support block **20** and has its free end linked to hydraulic motor **21** to make the tie gripping mechanism rotatable about a vertical axis. A hydraulically operable tie gripper **27** is mounted at the lower end of the vertically adjustable and rotatable support block **20**.

The carrier beam **17** is pivotal about an axis extending perpendicularly to the track and parallel to the track plane by means of a pair of hydraulic motors **24** having one of their ends linked to the frame **2** while their upper ends are linked to a crossbeam **25** fixed to the carrier beam **17**.

The tie gripping mechanism is accordingly movable through a path extending in the direction of the right of way between end positions A and B respectively adjacent the rail lifting means **6** and one end of elongated tie conveyor means **28** extending in the direction of the right of way for transferring ties between the trackless ballast section and a tie transport car (not shown) adjacent the other end of the conveyor means. An intermediate position C in the path of the mechanism serves to lay a selected one of the ties on the ballast and to remove it therefrom, depending on the stage of the track renewal work. It will be appreciated that the one end position of the tie gripping mechanism is located substantially centrally between the rails, and the other end position serves to deposit the selected tie on the one conveyor means end and to receive it therefrom, again depending on the stage of the track renewal work. As shown and in accordance with the invention, the one conveyor means end is positioned below the path of movement of the tie gripping means **23** between the intermediate position C and the other end position B of the tie gripping mechanism.

A drive motor **29** is mounted at the end of frame **2** remote from the rail lifting means **6** for operating not only the pumping means for the hydraulic fluid in the common hydraulic system for all the hydraulic motors but also for driving the wheels of running gear **4a** so that the entire apparatus is self-propelled for mobility on the track. When the equipment is transported between distanced working stations, the full-track vehicle is lifted above the plane of the track over which the apparatus moves.

Operation of the apparatus will be largely self-evident from the above description of its structure and will be further elucidated hereinbelow in connection with the working stage when old ties are removed from a right of way during track renewal operations, at which time the apparatus moves in the direction of arrow I (shown in full lines). In an obvious manner, movements will simply be reversed when the apparatus moves in the opposite direction (broken arrow II) during the track renewal stage when new ties are laid. Similarly to arrows I and II indicating the working direction of the apparatus along the right of way, the directions of movement of the tie gripping mechanism **23** are also indicated by arrows in full line for the tie removal stage and arrows in broken lines for the tie laying stage.

In the tie removal stage, after the spikes or bolts fastening the rails to the ties have been removed and the rails have been lifted, successive ties are gripped at intermediate station C by grippers **27** and lifted off ballast **5**. The tie gripping mechanism **23** is then moved along carrier beam **17** into the one end position A adjacent the rail lifting station, where the mechanism is turned to bring the tie from a position transverse to the track into a position parallel to the track, as shown in broken lines at A in FIG. **1**. At this point, the space between the ballast and the raised rails is larger than at C so that there is sufficient room for this turning movement of the tie. The spacing between the end position A and intermediate position C is at least equal to the difference between half a tie length and the width of a crib so that the turning movement is not hampered by the next adjacent tie still in position on the ballast. After the tie has thus been turned to lie in the direction of the right of way and parallel to the conveyor **28**, the carrier beam **17** is pivoted upwardly into the position indicated in broken lines in FIG. **1** so that it is parallel to the downwardly inclined conveyor **28**. At the same time, the tie gripping mechanism is moved along beam **17** past the intermediate position C to the other end position B where the gripped tie is in alignment with the one end of conveyor **28** which is below the path of movement of the tie. The gripper **27** is now released so as to deposit the tie on the conveyor for transfer to the other end of the conveyor (not shown) where it may be stored on a transport car (also not shown).

As will be seen, all movements of the tie gripping mechanism are hydraulically effectuated and may accordingly be readily controlled automatically by the operation of solenoid valves in the hydraulic circuit by limit switches, as is well known, such switches being arranged in the path of the tie gripping mechanism and/or the ties gripped thereby.

The modification of FIG. **1a** differs from the above-described embodiment only in the structure of the guide for the tie gripping mechanism **23** and the tie conveyor. In this modification, the one end portion of tie conveyor **28'** runs parallel to the track plane below the path of movement of the gripped tie. Also, the carrier beam **17'** is fixedly mounted on the apparatus frame **2** and extends parallel to this end portion of the tie conveyor. In this structure, lifting of the gripped tie **1** from below the level of the raised rails **3** to a level thereabove is effected not by the upward pivoting of the tie gripping mechanism guide **17'** but by a larger lifting stroke of the tie gripper **27** by motor **18**. Otherwise, the apparatus is constructed and operates like the equipment of FIG. **1**.

What is claimed is:

**1**. An apparatus mounted for mobility along a right of way of a railroad track including rails mounted on ties, the right of way comprising a trackless ballast section and an adjacent track section, the apparatus comprising

1. means arranged in the trackless ballast section for lifting the rails off the ballast and for holding the rails spaced from the ballast;
2. elongated conveyor means extending in the direction of the right of way for conveying ties to and from the trackless ballast section;

3. a mechanism for gripping ties mounted for movement through a path extending in the direction of the right of way between end positions respectively adjacent the rail lifting means and one end of the conveyor means, with an intermediate position therebetween, the mechanism being
   a. vertically adjustable from a first position below the lifted rails to a second position above the rails, and
   b. rotatable about a vertical axis for swinging the ties in the first position of the mechanism between a first position transverse of the direction of the right of way and a second position substantially parallel thereto; and
4. a guide means supporting the tie gripping mechanism for said movement,
   c. one of the end positions of the tie gripping mechanism being located substantially centrally between the rails, wherein the mechanism is rotated and vertically adjusted,
   d. the intermediate position of the mechanism serving to lay a selected one of the ties on the ballast and to remove it therefrom,
   e. the other end position of the mechanism serving to deposit the selected tie on the one conveyor means end and to receive it therefrom, and
   f. the one conveyor means end being positioned below the path of movement of the tie gripped by the mechanism between the intermediate and other end positions of the mechanism.

2. The mobile apparatus of claim 1, wherein the conveyor means is downwardly inclined towards the intermediate position of the tie gripping mechanism, and further comprising means for pivoting the guide means for the mechanism between a position substantially parallel to the inclined conveyor means and a position substantially parallel to the track.

3. The mobile apparatus of claim 1, wherein the distance between the one end position of the tie gripping mechanism and the intermediate position thereof is at least equal to the difference between half a tie length and a crib width.

4. The mobile apparatus of claim 1, further comprising automatic control means for the sequential control of the longitudinal, vertical and rotary movements of the tie gripping mechanism, said control means including limit means responsive to respective end positions of said movements.

5. The mobile apparatus of claim 4, further comprising hydraulic means for effectuating said movements, the control means including solenoid valve means controlling flow of hydraulic fluid to the respective hydraulic moving means and the limit means being limit switches operating the valve means.

6. The mobile apparatus of claim 1, further comprising a bridge-like frame having two ends, respective running gears supporting the frame ends for mobility on the track rails, a frame portion extending from one frame end beyond the running gear supporting the one frame end and overhanging the trackless ballast section, the rail lifting means being mounted on the overhanging frame portion, and the guide means for the tie gripping mechanism being pivotally mounted on the bridge-like frame and extending from the one frame end towards the other frame end.

7. The mobile apparatus of claim 1, further comprising a full-track vehicle running in the trackless ballast section on the ballast substantially centrally between the rails, and the rail lifting means being supported on the full-track vehicle.

8. The mobile apparatus of claim 1, wherein the rail lifting means comprises a laterally pivotal rail holding device for movement into and out of engagement with a respective one of the rails, and a rail engaging roller associated with the rail holding device.

* * * * *