United States Patent

[11] 3,585,823

[72] Inventor **Alice R. Nagel**
68-01 60th Road, Maspeth, N.Y. 11378

[21] Appl. No. **842,206**
[22] Filed **July 16, 1969**
[45] Patented **June 22, 1971**

[54] **CHAIN LOCK**
3 Claims, 8 Drawing Figs.

[52] **U.S. Cl.** **70/49,** 70/38
[51] **Int. Cl.** **E05b 67/18,** E05b 67/24
[50] **Field of Search** ..... 70/15, 30, 49, 18, 39, 53, 38 A, 259, 260

[56] **References Cited**

UNITED STATES PATENTS

507,948	10/1893	Waine	70/49
1,419,469	6/1922	Paschke	70/260
1,779,716	10/1930	Shaw	70/38
2,125,052	7/1938	Ranson	70/49 X
2,465,008	3/1949	Carlson	70/49
3,117,437	1/1964	Russell	70/38

FOREIGN PATENTS

7,540	1/1879	Germany	70/49
213	1/1879	Great Britain	70/49

Primary Examiner—James A. Leppink
Assistant Examiner—Edward J. McCarthy
Attorney—Sparrow & Sparrow

ABSTRACT: A chain lock of the type embodying an encircling chain and a lock housing secured at one end of said chain, the lock housing including a chain passage and a lock tumbler rotatable in the housing, so as to throw a locking bolt through the chain passage and the chain supported in the passage. The housing may also include an additional leash end plug aperture and an additional locking bolt, so as to lock an additional chain into the housing.

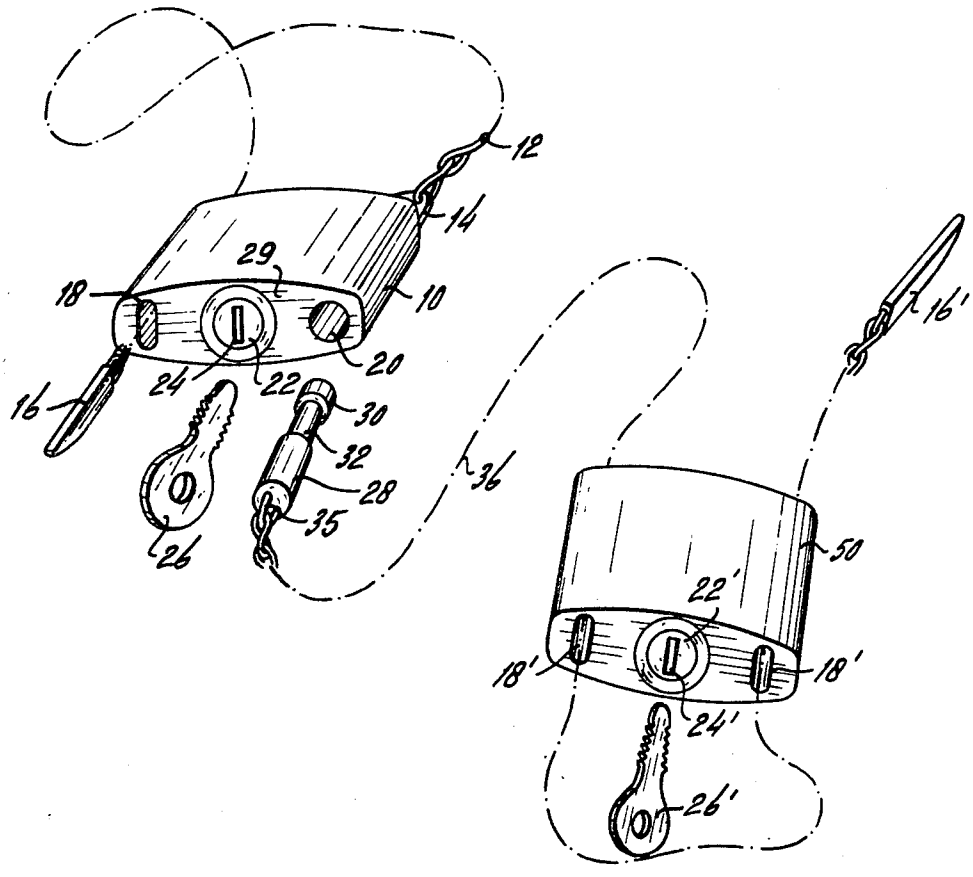

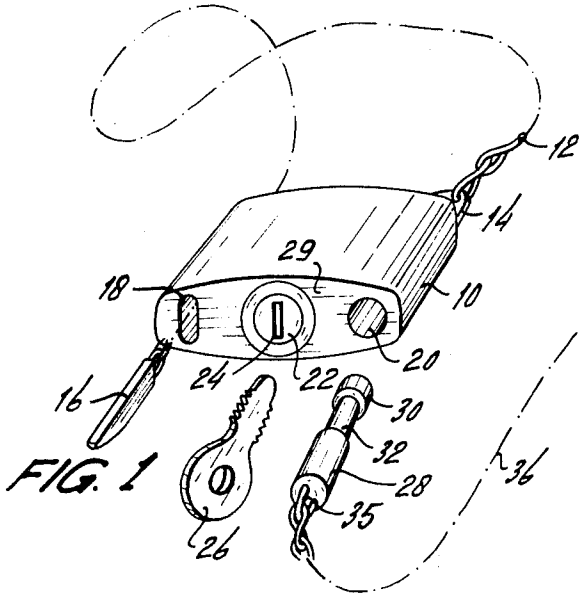

FIG. 1

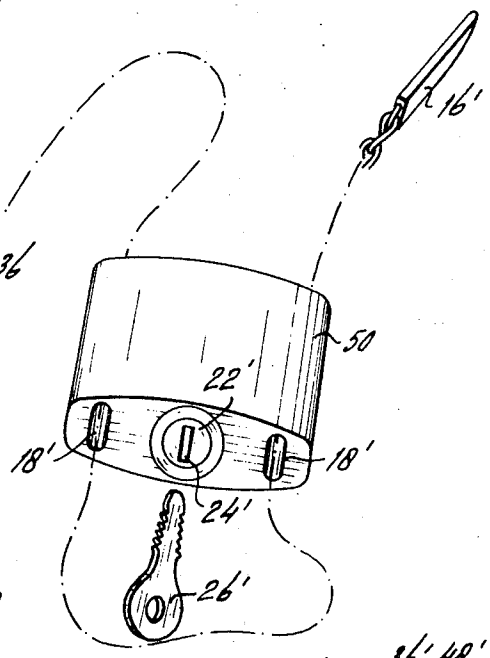

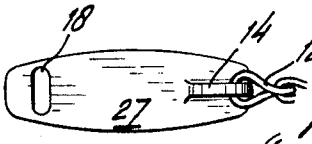

FIG. 3

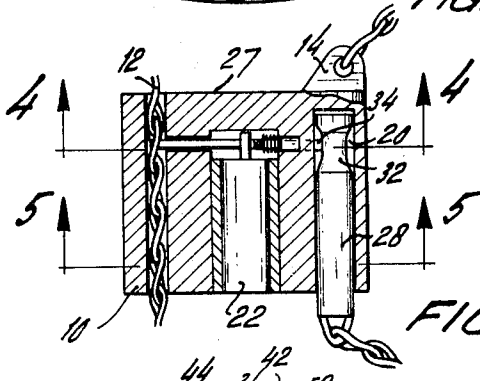

FIG. 2

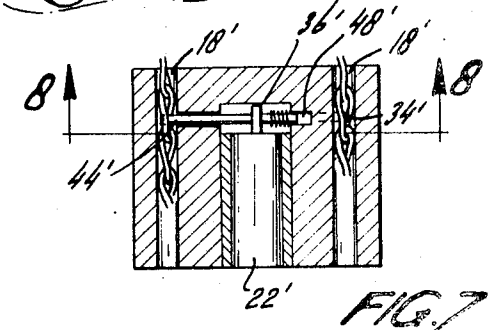

FIG. 7

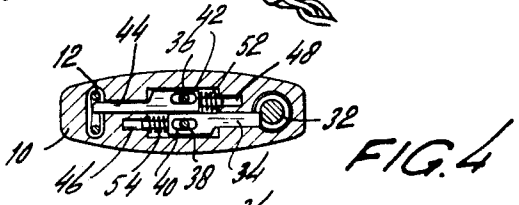

FIG. 4

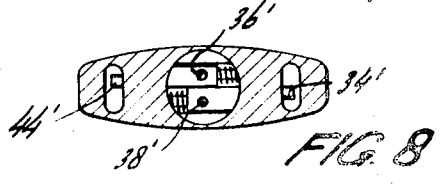

FIG. 8

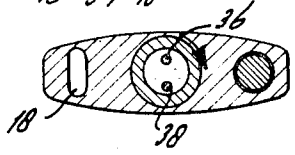

FIG. 5

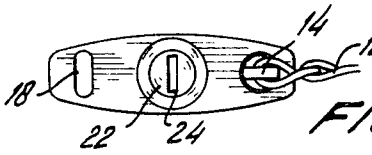

FIG. 6

INVENTOR
ALICE R. NAGEL

BY

ATTORNEY

CHAIN LOCK

BACKGROUND OF THE INVENTION

1. Field of the Invention

A great deal of recent attention has been given to devices for locking pets in automobiles and other unattended areas so as to prevent theft. A principal shortcoming of most such prior art devices is their relative lack of adjustability to the various chain lengths required in different locking situations. These devices for the most part have included a lock tumbler and slidable locking bolts engageable with a chain length, but have not been adapted for dual chain use.

2. Description of the Prior Art

Prior art searching has developed the following:

Eldridge, U.S. Pat. No. 277,469,
Martens, U.S. Pat. No. 294,058,
Merrill, U.S. Pat. No. 599,245,
Powell, U.S. Pat. No. 640,221,
Swoggers, U.S. Pat. No. 880,932,
Zukowski, U.S. Pat. No. 1,340,928,
Grimes, U.S. Pat. No. 1,372,020,
Dolan, U.S. Pat. No. 1,497,093,
Lichtenberger, U.S. Pat. No. 1,681,416,
Johnson, U.S. Pat. No. 1,788,396,
Stone, U.S. Pat. No. 1,792,403,
Miller, U.S. Pat. No. 1,835,317,
Falk, U.S. Pat. No. 2,104,981,
Wise, U.S. Pat. No. 2,140,490,
Carlson, U.S. Pat. No. 2,465,008.

These earlier inventors have devised locking hasps which have used a key-lock tumbler to abut a reciprocable pin in a locking hasp. Note, for example, Swoggers and Miller. Miller's tumbler engages an annular recess in the locking hasp pin. Stone's tumbler includes a pin (**10**) which laterally reciprocates to engage two chain lengths. Grimes shows a lock pin displaceable laterally by the key.

SUMMARY OF THE INVENTION

The present invention is directed principally to a lock housing and an encircling chain, the housing including a rotatable tumbler and a locking bolt. In the housing there are both a chain extending passage and a leash plug passage or, alternatively, two chain extending passages. As a result, the device may be used not only to encircle the pet as an adjustable leash but also to attach the lock device to a steering wheel, lamp post, or the like. Sturdiness, easy adjustment, and simplicity are inherent in the device. The chain lock is not restricted to locking of pets, but also may be used as a chain lock for handcuffing or shackling a prisoner and securing a chained gate or door.

BRIEF DESCRIPTION OF THE DRAWINGS

FIG. **1** is a perspective view of the first lock housing embodying a chain passage and a leash end plug passage and the second lock housing, embodying dual chain extended passages;

FIG. **2** is a vertical section of the first lock housing, embodying a chain passage and leash end plug aperture;

FIG. **3** is a top plan thereof;

FIG. **4** is a transverse section, taken along section line **4–4** of FIG. **2**.

FIG. **5** is a transverse section, taken along section line **5–5** of FIG. **2**.

FIG. **6** is a bottom plan, partially in fragment;

FIG. **7** is a vertical section of the second housing, embodying dual chain passages; and

FIG. **8** is a transverse section, taken along section line **8–8** of FIG. **7**.

DESCRIPTION OF THE PREFERRED EMBODIMENTS

In FIG. **1** lock housing **10** is illustrated as having a linked chain **12** connected at its end to bracket **14** on top **28** of the housing.

Housing **10** includes a chain-extending passage **18** through which guide **16** may be pushed. A rotatable lock tumbler **22**, having a key aperture **24**, is supported in the bottom of the housing intermediate chain passage **18** and leash end plug aperture **20**.

As illustrated in FIGS. **2—5**, the rotatable tumbler **22** had axially aligned pins **36** and **38** supported at its inner end, so as to engage corresponding apertures **42** and **40** in lock bolts **44** and **34**. These lock bolts may include compression springs **52** and **54**. Bolt recess **48** and bolt recess **46** are provided in the housing, so as to support the bolt in unlocked position.

The bolts are indicated in locked position on both FIGS. **2** and **4**, bolt **34** engaging recess **32** intermediate the plug end **30** and its base section **28**. Bolt **44** end extends through a link in chain **12**, thus simultaneously locking the chain and the leash plug end.

An additional linked chain **36** may be secured to plug **28** by means of bracket **35** and extend through identical chain extending passages **18'** in lock housing **50**. As illustrated in FIGS. **7** and **8**, lock tumbler **22'** includes axially aligned locking pins **36'** and **38'** which engage identical apertures in locking bolts **34'** and **44'**, the ends of the bolts extending through the chain links in the mode illustrated in FIGS. **7** and **8**. Chain **36** may have an optional locking guide **16'** in one end thereof to facilitate pulling of the chain through passages **18'**.

As will be apparent, the chain may be linked around the neck of the animal at one end or through his collar and at the other end may encircle a stationery locking object. By removal of the keys from the lock tumblers, the pet is securely locked in place.

Specific dimensions of the tumbler, locking bolts, and passages as well as the leash end plug may be varied without departing from the spirit of the invention.

I claim:

1. A chain lock of the type including an encircling chain comprising:

A. a first lock housing having a chain passage extending completely therethrough and a chain leash plug housing extending from one end of said housing and terminating therewithin and including:

i. a lock tumbler with a key aperture rotatably supported in said lock housing;

ii. a chain locking bolt connected to said tumbler and extensible into said chain passage, as said tumbler is rotated;

iii. a plug locking bolt connected to said tumbler and extensible reciprocably into said chain leash plug housing as said tumbler is rotated;

B. a linked chain connected at one end to said lock housing and extensible through said chain locking passage; and

C. a key insertable into said lock tumbler, so as to rotate said tumbler;

D. a second lock housing having two chain passages extending completely through either side and including:

i. a lock tumbler with key aperture rotatably supported therein;

ii. a pair of locking bolts connected to said tumbler and extensible into said chain passages, as said tumbler is rotated;

iii. a linked chain extensible through said chain passages and having at one end a locking plug complementally engageable with said chain leash plug housing and said plug locking bolt in said first housing and at its other end having a guide member; said plug having a substantially annular reduced diameter portion providing locking clearance for said plug locking bolt; and

E. a key insertable in said second lock tumbler.

2. A chain lock of the type including an encircling chain as in claim 1, said lock tumblers each having two locking pins extending axially thereof and said locking bolts including recesses complementally engageable with said locking pins so as to reciprocate said bolts upon rotating of said lock tumblers.

3. A chain lock as in claim 2, including compression spring means interspersed between the inner ends of said locking bolts and said housings so as to urge said bolts respectively through said chain passage and said plug aperture.