W. DIETER.

STARTING VALVE FOR TORPEDOES.

APPLICATION FILED FEB. 7, 1918.

1,303,045. Patented May 6, 1919.

Fig. 1.

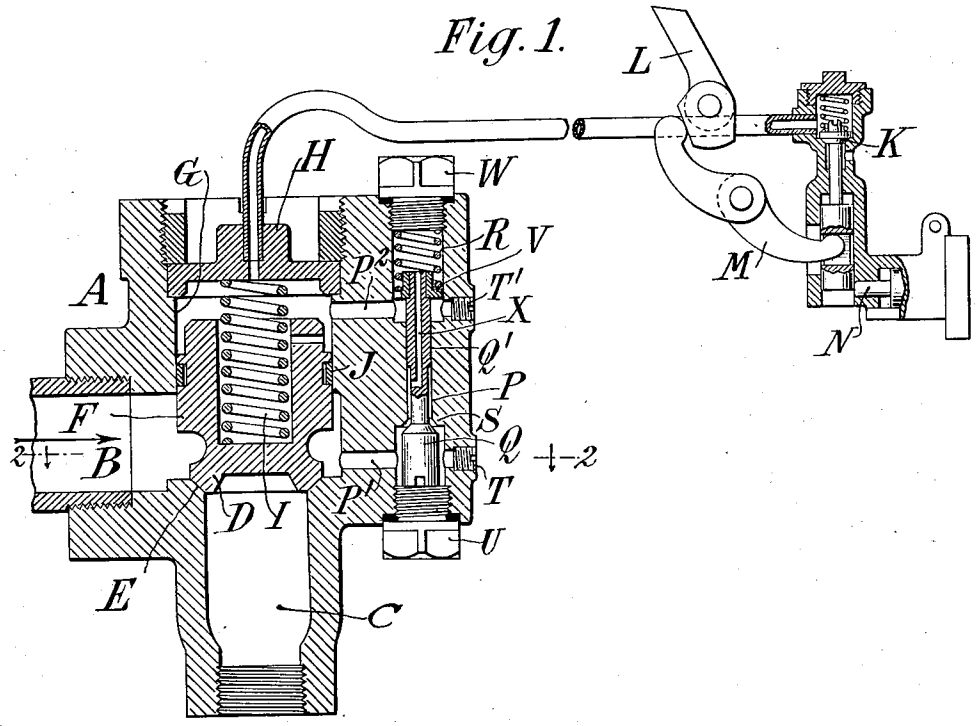

Fig. 2.

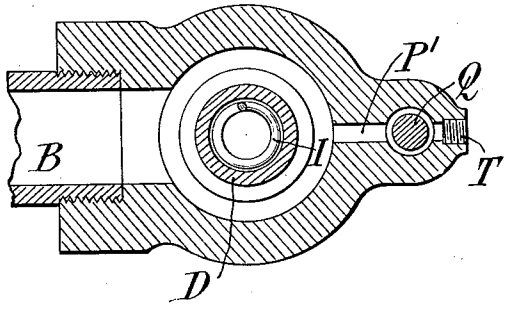

WITNESS:

René Bruine

INVENTOR:

William Dieter

By Attorneys,

Fraser, Dunlop & Myers

UNITED STATES PATENT OFFICE.

WILLIAM DIETER, OF BROOKLYN, NEW YORK, ASSIGNOR TO E. W. BLISS COMPANY, OF BROOKLYN, NEW YORK, A CORPORATION OF WEST VIRGINIA.

STARTING-VALVE FOR TORPEDOES.

1,303,045. Specification of Letters Patent. Patented May 6, 1919.

Application filed February 7, 1918, Serial No. 215,786.

To all whom it may concern:

Be it known that I, WILLIAM DIETER, a citizen of the United States of America, residing in the borough of Brooklyn, county of Kings, city and State of New York, have invented certain new and useful Improvements in Starting-Valves for Torpedoes, of which the following is a specification.

This invention provides an improved construction of starting valve for automobile torpedoes.

The patent of F. M. Leavitt, No. 1,064,349, of June 10, 1913, illustrates a starting valve of the type on which my present invention is based. Such a valve is characterized by a combined tappet and piston or plunger, the latter being of an area overbalancing the tappet, the unbalanced area being on the inlet side, so that the tendency of the inlet pressure is to open the valve, but this tendency is normally overcome by the admission of inlet pressure to opposite sides of the plunger; and an auxiliary means is provided for relieving the pressure from such other side to permit the unbalanced inlet pressure to open the valve under the conditions required for starting the torpedo. In the patent last referred to, this latter means is a control valve which is opened by the movement of the starting arm or hook as the torpedo starts moving through the launching tube. In an earlier patent to F. M. Leavitt, No. 880,030, February 25, 1908, the means for escaping pressure to open the starting valve is a capsule of thin sheet metal which is cut at the starting of the torpedo.

In such valves heretofore the pressure has been balanced on opposite sides of the plunger by passing through a minute duct orifice drilled through the plunger head; or by leaking around the plunger. These means have been satisfactory for the comparatively low pressures heretofore most commonly used. These did not exceed 2250 pounds per square inch; but with the higher pressures now commonly used, which reach 2800 pounds per square inch, difficulty is experienced, during the earlier part of the run while such high pressure exists, in providing the required limited communication through or around the plunger for insuring the correct operation of the starting valve, and avoiding undue loss by leakage. The present invention is designed to overcome this difficulty.

According to the present invention a special duct is provided through the valve casing communicating with the interior of the latter on opposite sides of the valve plunger, and in this duct is introduced an auxiliary leak valve which in the normal or static condition is pressed open by a spring, and which, upon the unbalancing of pressures, which results in opening the starting valve, is seated by the preponderant pressure and remains seated during the early part of the run of the torpedo and until the pressure falls to a determined amount. This auxiliary valve thus prevents the leakage of air which heretofore has occurred through or around the starting valve plunger and which, with the higher pressure now used, becomes a serious loss.

The accompanying drawing shows a preferred embodiment of the invention.

Figure 1 is a vertical longitudinal mid-section of the starting valve and accessories;

Fig. 2 is a horizontal section of the valve.

Referring to the drawings, A is the valve shell of the starting valve, having the usual inlet B for admitting air from the compressed air flask or reservoir; C is the outlet, which in the normal or static condition is closed by a valve proper or tappet D closing against a seat E. The tappet D is connected to a plunger F which works in a cylindrical chamber G, which chamber is closed by a cap H in the usual manner. The movable valve member F D is pressed down initially by a spring I. A packing ring or other packing of the piston type is applied to the plunger at J in order to make a substantially leak-tight joint between the plunger and the cylinder wall. For liberating the pressure above the plunger to open the valve a control valve is shown which is of the same construction as in Patent No. 1,064,349, and which, being well known in the art, requires no description. This valve K is operated by the starting arm L through an intermediate lever M, being held open by a bolt N, as fully described in said patent.

Normally the pressure is equalized on opposite sides of the plunger F in order that the pressure above may hold the valve closed.

To accomplish this equalization a communicating duct must be provided, which heretofore has been in the form of a minute hole drilled through the plunger. This hole, after the opening of the valve, permits a constant out-blow of compressed air which leaks away and is lost. According to the present invention, a special duct P is provided communicating from beneath the plunger F to the chamber above it, and a valve Q is arranged to control this duct, being normally pressed open by a spring R, and adapted to close against a seat S to stop the flow of compressed air through the duct when the pressure is relieved above the plunger. For this purpose the valve Q is arranged with reference to the duct so that it closes after the manner of a check valve with the first rush of air from beneath to above the plunger. In the specific construction shown, the duct P is drilled vertically through the valve shell and counterbored to form enlarged chambers above and below, and a cross duct P^1 is drilled to communicate from the inlet side of the valve to such lower chamber, and a cross duct P^2 to afford similar communication to the cylinder G above the plunger, these latter ducts being closed by plugs T T'. The valve Q is introduced from below and the lower chamber closed by a screw or cap U. The valve stem Q' extends through the duct P and its upper end carries a head V which has a flange receiving the pressure of the spring R, and this spring reacts upwardly against a plug or cap W which closes the top chamber above the duct P. When the valve Q is open, as shown, there is free communication between it and the seat S, and around or through the valve stem to the cross duct P^2. To afford such communication the stem Q' is drilled through, as shown, forming an inner duct X, but this is not essential.

Before launching the torpedo the starting valve is held closed by the pressure of compressed air above the plunger F pressing downwardly upon an unbalanced area equal to that of the seat E; at launching, the control valve K is opened and permits an escape of pressure from cylinder G above the plunger, whereupon the full pressure beneath, acting on the greater area of the plunger, forces the latter up and lifts the tappet from its seat, thus throwing the starting valve open. The auxiliary valve Q is initially open and for an instant there is a powerful outflow of compressed air through ports P, X, P^2, and from the valve cylinder G through the tube leading to valve K; almost instantly this outflow forces the valve Q to its seat and holds it there against the pressure of the spring R. The valve Q thus remains closed until the pressure in the air flask has fallen to such extent that the pressure against valve Q is less than the opposing pressure of the spring R, whereupon the latter forces open the valve Q and reestablishes free communication between opposite sides of the plunger. This reopening of the plunger should preferably occur when the flask pressure falls to about 1000 pounds per square inch.

The valve Q thus not only prevents undue waste of compressed air while the latter is under a very high pressure, but establishes such conditions as insure the correct control of the starting valve by the control valve K, so that at any period in the run of the torpedo if the valve K be closed (as by centrifugal action in case of the overspeeding of the engine) there will instantly follow such upbuilding of pressure in cylinder G above the plunger F as will quickly close the starting valve and stop the torpedo. At the higher pressures, while valve Q is closed, such upbuilding of pressure is due to the inevitable slight leakage past the plunger F (it being impossible to make the packing rings J so tight as to avoid this leakage); but at the lower pressures the leakage past the plunger would be insufficient to close the valve with sufficient promptness, and at this time the valve Q being open, free communication is afforded between opposite sides of the plunger through the ducts P and X.

The preferred construction of the valve Q and its appurtenances is that shown, but this construction may be greatly varied, it being within the invention to use any suitable construction of valve which is held open by spring pressure or equivalent force, and which is closed by the flow of air through the duct P. The details of construction may be greatly modified without departing from the invention. While it is preferable to form the duct P through the casing of the valve, yet it may be located in any convenient place provided it affords the requisite communication between the inlet side of the starting valve and the opposite side of the plunger.

I claim as my invention:—

1. In a starting valve of the type comprising a tappet and connected plunger and opened by the release of pressure from the opposite side of the plunger, the combination with the valve shell, tappet, and plunger, of an auxiliary valve adapted to control a duct communicating between opposite sides of the plunger, said valve being normally open and adapted to be closed automatically upon such release of pressure by the flow from the tappet side to the opposite side of the plunger, whereby to prevent waste through such duct.

2. A starting valve according to claim 1, wherein the auxiliary valve has a spring which normally holds it open, and is adapted to be closed by the flow of fluid through said duct.

3. A starting valve according to claim 1, wherein the valve-shell is formed with such duct through its wall, and with lateral ducts connecting said duct on opposite sides of the auxiliary valve with the chambers on opposite sides of the plunger.

4. A starting valve according to claim 1, wherein the valve-shell is formed with such duct through its wall, and with enlarged chambers at opposite ends thereof, the auxiliary valve located in one such chamber, with its stem passing through the duct into the other chamber, and a spring in the latter chamber engaging the stem to press the valve open.

5. A starting valve according to claim 4, with caps to close the respective enlarged chambers.

6. A starting valve according to claim 1, wherein the auxiliary valve has a spring for opening it of such stress as to open this valve upon a predetermined fall of pressure.

In witness whereof I have hereunto signed my name.

WILLIAM DIETER.