March 28, 1950 A. H. ZEIGLER 2,502,361

METHOD FOR MAKING FIBROUS MATERIALS

Filed March 25, 1943 3 Sheets-Sheet 1

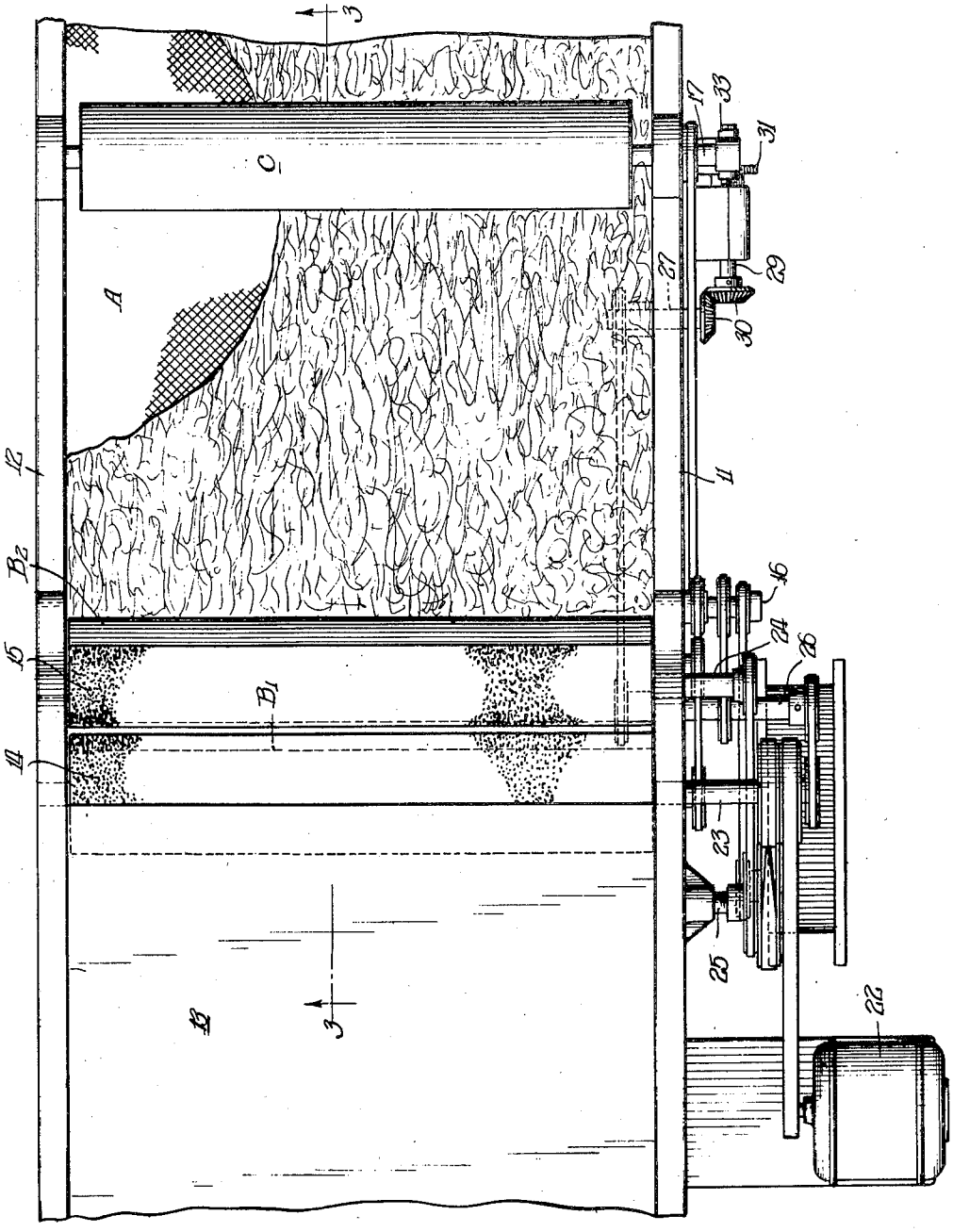

Fig. 1

INVENTOR.
Albert H. Zeigler,
BY
Carl C. Batz
Atty.

March 28, 1950 A. H. ZEIGLER 2,502,361

METHOD FOR MAKING FIBROUS MATERIALS

Filed March 25, 1943 3 Sheets-Sheet 2

Fig. 2.

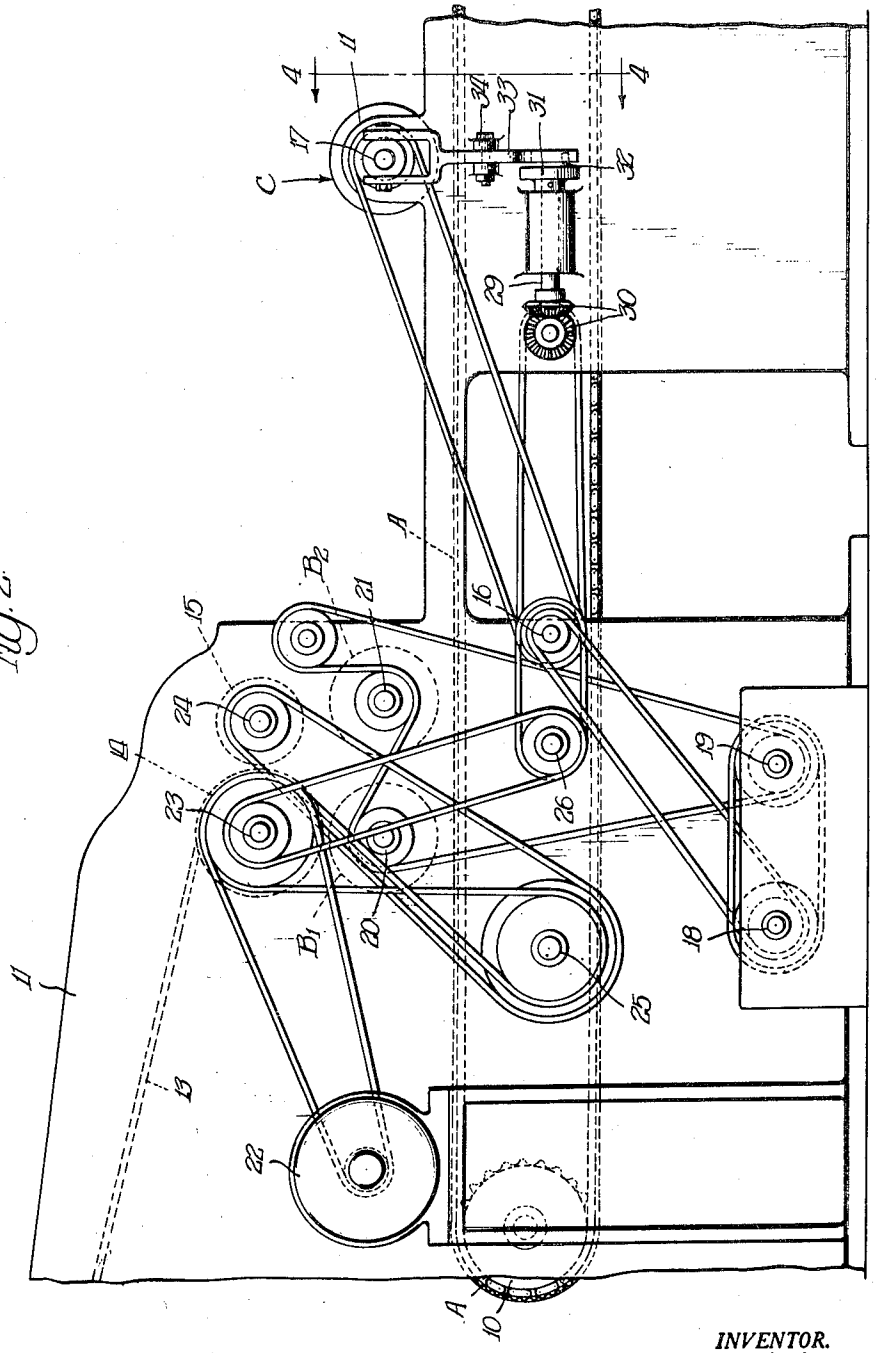

INVENTOR.
Albert H Zeigler,
BY
Carl C. Batz
Atty.

March 28, 1950 A. H. ZEIGLER 2,502,361

METHOD FOR MAKING FIBROUS MATERIALS

Filed March 25, 1943 3 Sheets-Sheet 3

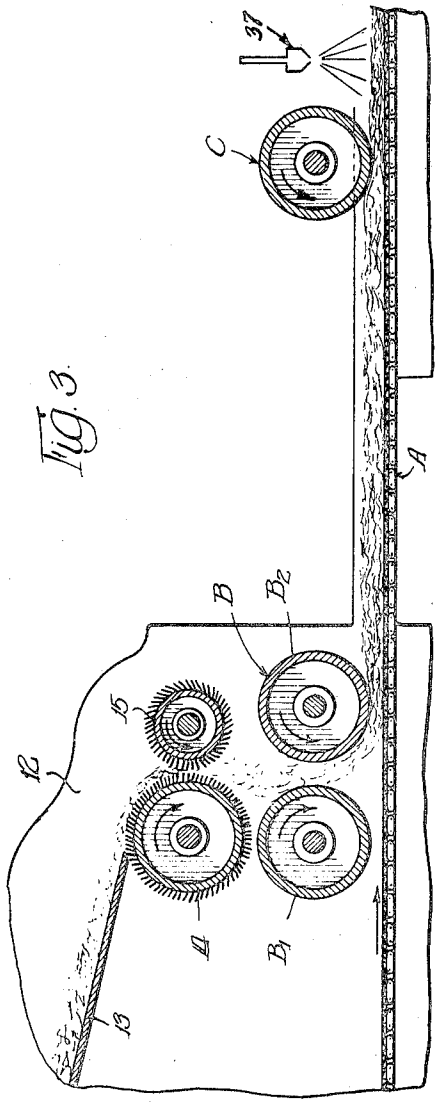

Fig. 3.

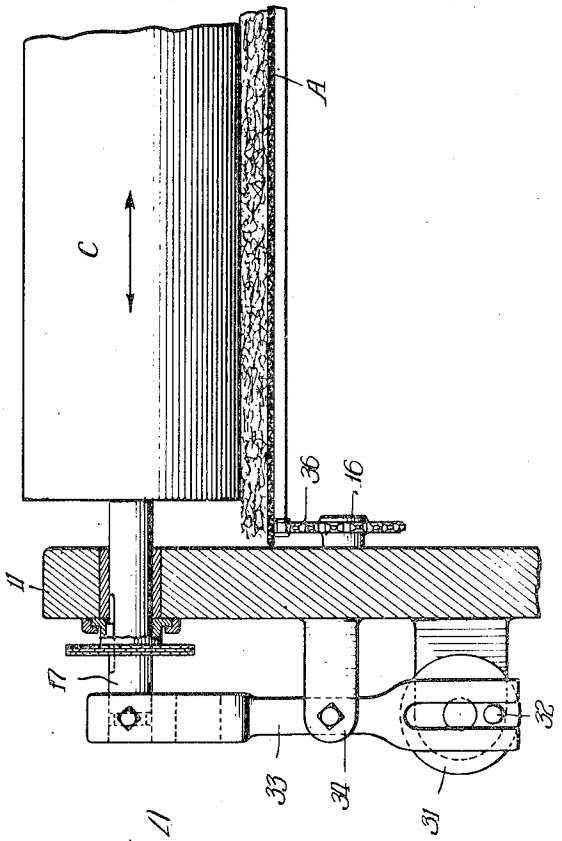

Fig. 4.

INVENTOR.
Albert H. Zeigler,
BY
Carl C. Batz
Atty.

Patented Mar. 28, 1950 2,502,361

UNITED STATES PATENT OFFICE

2,502,361

METHOD FOR MAKING FIBROUS MATERIALS

Albert H. Zeigler, Evanston, Ill., assignor to Armour and Company, Chicago, Ill., a corporation of Illinois

Application March 25, 1943, Serial No. 480,545

5 Claims. (Cl. 154—33)

1

This invention relates to a method and improved apparatus for making fibrous materials such as mats of padding materials suitable for upholstery and the like.

In the manufacture of padding materials such as curled hair mats, the curled hair, for example, is customarily fed manually to a picker machine which combs out knots and throws it into the hopper of a spreader machine which by means of a toothed roll throws it more or less evenly on the moving table of the conveyor. As the layer of hair passes along on the conveyor it may be sprayed with latex or other rubber dispersion and later may be heated to vulcanize the rubber composition.

It is well known that the layer of fibrous material formed in this manner is variable in thickness because of more hair being distributed at some points than at others and this objection has heretofore been unavoidable. Where the requirements of use have demanded that the padding mat have uniform thickness, this has sometimes been approached by calendering the mats usually after coating with the rubber dispersion so as to squeeze them somewhat to a uniform thickness. However, this practice is unsatisfactory in that the fibers tend to spring back to their former thickness after calendering and compressing of the fibers tends to impair the cushioning qualities of the pad materials. Another practice is to cut or saw the product to the required thickness, but obviously this is a tedious and wasteful expedient.

An object of this invention is to provide a method and apparatus for forming a mat of padding material which is uniform in thickness and which avoids the difficulties above mentioned. A further object is to provide method and means for forming such mats in a continuous manner.

Another object is to provide a method and apparatus for forming mats of fibrous material having an improved surface structure; more specifically it is desired to provide a way to work the surface fibers closer together and to place more of them side by side in interlocked relation, and it is also desired to provide a way to bring more of the surface fibers to a position normal with the surface of the mat so that, in the case of curled hair, for example, the plane of the curls will not lie parallel with the surface of the mats but will be normal to or at an angle with the plane of the pad. It is also desired to provide apparatus which would effectively accomplish these purposes. Other objects and advantages will appear as the specification proceeds.

2

One form of the improved apparatus and suitable for carrying out the process of this invention is illustrated in the accompanying drawings in which:

Fig. 1 is a plan view of a part of a spreading machine which embodies this invention. A mat of curled hair is shown passing through the machine, with a part being broken away to show the conveyor.

Fig. 2 is a side view in elevation particularly showing the driving mechanism.

Fig. 3 is a vertical sectional view taken in the center of the machine as shown at line 3—3 of Fig. 1, and

Fig. 4 is a detailed sectional view taken as seen from line 4—4 of Fig. 2 and showing the roll oscillating mechanism.

As illustrated, A designates a conveyor; B, a pair of feed rolls; and C, a roll for applying desired surface characteristics to the web or pad.

The conveyor A provides a moving table on which the fibrous material is to be distributed, and may be of any suitable type. As here shown, it is an endless belt of metal slats which moves about end pulleys, one of which is shown in Fig. 2 and designated by the character 10. This conveyor may be powered by any suitable means.

The frame of the machine includes the two side members 11 and 12; and the rolls and necessary driving pulleys, etc., are suitably mounted on or journaled in these side frame members.

For introducing the fibrous material to this apparatus an inclined bottom piece 13 provides with the sides 11 and 12 a kind of chute down which the loose material slides. Instead of the solid bottom piece 13 a belt conveyor could be substituted if so desired.

Receiving the fibers from this chute is the roll 14 which has its ends journaled in the sides 11 and 12 and which has fine teeth about its cylindrical surface. As shown in Fig. 3, this roll is located directly under the edge of the chute and is rotated in a clockwise direction so as to receive and pass the fibers forwardly and downwardly about its peripheral surface. A second roll 15 located forwardly of roll 14 has its ends journaled in sides 11 and 12 and is rotated in a direction counter to roll 14. This second roll is spaced from roll 14 and is also provided with fine teeth which extend back to cooperate with roll 14 for picking apart and distributing the fibers to some extent.

Below rolls 14 and 15 are the feed rolls B

which include a rear roll designated B_1, and a forward roll designated B_2. These rolls are cylindrical and I have found it advantageous that they have special coatings. An efficient coating is obtained when the rolls are covered with a fabric such as canvas, and the canvas then given a coating of a drying composition such as shellac. Such a coating provides the surface which enables the rolls to move the fibers, but at the same time prevents the sticking or retention of the fibers on the rolls. These rolls are spaced apart and above the conveyor, and preferably at least roll B_2 is adjustable with respect to the conveyor so as to accommodate various thicknesses of fibrous mats. Each of these rolls have their ends journaled in the end pieces 11 and 12. As seen by the arows in Fig. 3, roll B_1 is rotated in a clockwise direction and roll B_2 in a counterclockwise direction. The fibers from rolls 14 and 15 fall down into the space above and between these rolls B, the rolls forming a kind of hopper. The fibers pass downwardly between rolls B to the conveyor top, pass under roll B_2, and then proceed forwardly with the conveyor.

The laterally moving roll C, located forwardly on the machine, has its ends journaled in sides 11 and 12 and is spaced above the conveyor so that its bottom surface contacts the top of the fibrous layer as the layer passes on the conveyor. Preferably this roll is covered in the same manner as described in connection with rolls B to provide a better "working" surface. The roll is positioned so that its axis is lateral to and preferably at an angle of 90° with the direction of movement of the conveyor. Each of rolls B, and rolls 14 and 15 also preferably have their axes parallel and at a 90° angle with the direction of the movement of the conveyor.

Any suitable means may be provided for driving the conveyor and the various rolls. In the embodiment illustrated the conveyor is driven through the end pulley at the forward end (not shown) corresponding with pulley 10, and shaft 16 (see Figs. 2 and 4) is powered by the conveyor through gear mechanism 36. Shaft 16 drives the shaft 17 of roll C, and also through 18 and 19 drives the shaft 20 of roll B_1, and also the shaft 21 of roll B_2. Thus rolls B and C are rotated in synchronization with the movement of the conveyor. Advantageously, these rolls are rotated at a speed such that their surface moves at the same peripheral speed as the lineal speed of the conveyor, though under some conditions they may be rotated at a slightly greater rate. Rolls B_2 and C must, of course, be rotated in a direction such that their bottom surfaces move in the same direction as the conveyor. The direction of movement of the conveyor and the rolls is illustrated by arrows in Fig. 3.

The rolls 14 and 15 may be powered by any suitable source as illustrated, the electric motor 22 drives the shaft 23 of roll 14, and shaft 23 drives the shaft 24 of roll 15 through the shaft 25. Thus rolls 14 and 15 are driven by the motor, the arrangement being such that the rolls are driven in opposite directions with roll 14 being rotated in a direction to move its top portion forwardly.

The mechanism for imparting lateral motion to roll C is driven through shafts 23, 26, and 27. The shaft 27 drives shaft 29 through beveled gears 30, and secured to shaft 29 is the cam member 31 containing the pin 32. A rocker arm 33 is pivotally mounted at 34, has its upper yoke portion engaged about the end of shaft of roll C, and has a slotted lower portion which is engaged by pin 32. Rotation of cam member 31 produces rocking motion of arm 33 which causes lateral oscillating motion of the roll C.

In the operation of the machine, the fibrous material such as curled animal hair passes down the chute formed by bottom 13 onto the top of roll 14. Passing forwardly and downwardly on this roll it is picked and thrown apart and passed downwardly by action of roll 15 in association with roll 14. The fibers then fall into the "hopper" formed by rolls B, and the rotation of rolls B tends to pull down the fibers forming them into a substantially even layer which passes onto the conveyor and about the periphery of roll B_2 being passed between roll B_2 and the conveyor. Desirably, the spaces between the rolls B and between roll B_2 and the conveyor are substantially less than the intended thickness of the finished sheets so that these rolls exert more of an evening action as the layer is formed.

The fibrous layer passing forward on the conveyor comes to the roll C and passes between this roll and the conveyor. This roll is preferably adjustable so that the space between it and the conveyor can be set at a distance somewhat less than the intended final thickness of the sheet.

It will be remembered that roll C is moved both rotationally and axially, being rotated through the pulley 17 and axially reciprocated by arm 33 and its accompanying mechanism.

When approaching roll C the fibrous layer has its top fibers in a loose condition, many of them lying loosely on top each other without being secured or held fast, and a majority of them assume a substantially horizontal position. In the case of curled animal hair a majority of the top curls are lying flat, i. e., with the plane of the curl substantially parallel with the plane of the mat surface.

As the fibrous material passes under roll C, this roll brushes the surface fibers laterally. One effect of this is to work the surface fibers closer together in interlocked relation, and another effect is to bring many of the fibers which formally were lying flat into a position more nearly normal with the plane of the sheet. Thus in the case of curled hairs, many of the surface curls are turned so that the plane of the curl is no longer parallel with the surface of the mat. Since the roll C also rotates at a speed synchronized with the speed of the conveyor this latter brushing effect is accomplished without disturbance of the general form of the mat.

The mechanism for driving roll C in reciprocating motion may be arranged to produce oscillation of any desired frequency. I have found that if this roll is reciprocated at about 60 to 90 times per minute this will be satisfactory, but other rates may be used.

Moving on from roll C the fibrous mat may be cut and shipped for use as upholstery material, or any other use. Or, desirably, it may be sprayed with a rubber dispersion from a spray nozzle such as nozzle 37 in Fig. 3, and the pad thus treated vulcanized as in the prior practice.

The method of forming the mat according to this invention is specifically advantageous where the mats are sprayed or otherwise treated with dispersions of reclaimed rubber. Where fresh latex stock is used for coating of fibers in the prior practice as heretofore stated, it was sometimes practical to compress the sheet to the desired thickness after the coating is applied, and

in such case the natural tackiness of the latex would aid in retaining this shape until the mat was vulcanized, but when dispersions of reclaimed rubber were used this practice was not availing. Therefore, it is quite important that, especially when using reclaimed rubber, the thickness of the fiber layer as formed be closely controlled.

The omission of a calendering step after coating and the rearrangement of the surface fibers through reciprocating action produces a more desirable surface on any coated fibrous mat. And, independently of any coating, the rearrangement of the surface fibers produces a desirable effect since in their new relation the surface fibers are less easily brushed off from the main body of the mat and offer increased resiliency.

The improved method and apparatus are especially advantageous in connection with curled hair upholstery mats for the reasons heretofore indicated and also are useful in connection with other fibrous materials, for instance, coconut fiber, sisal, etc.

The foregoing detailed description is given for the purpose of explanation only and is not to be understood in a limiting sense. It is expected that many changes may be made in the process and apparatus by those skilled in the art without departing from the principles and spirit of the invention.

What I claim as new and desire to secure by Letters Patent is:

1. A method of forming a mat of curled fibers, said fibers each being in arcuate form and disposed substantially in a single plane comprising distributing the fibers in a layer, and while passing the layer along in one general direction subjecting fibers at the upper surface of said layer to movement in a direction lateral to said general direction whereby the inter-relation of said fibers is altered, spraying the layer with a liquid rubber dispersion and thereafter heating the sprayed layer to effect vulcanization of the rubber dispersion.

2. A method as called for in claim 1 in which said rubber dispersion is a dispersion of reclaimed rubber.

3. A method of forming a mat of curled fibers, said fibers each being in arcuate form and disposed substantially in a single plane, comprising distributing said fibers in a layer and while passing the layer in one general direction, subjecting some of the fibers at the top of said layer to a reciprocating movement in a direction lateral to said direction whereby individual fibers in a top surface of said layer are brought into a position in which the planes of their curls are to a greater extent out of alignment with the plane of the surface of the mat.

4. A method as set forth in claim 3 wherein said fibers are curled hog hairs.

5. A method of forming a mat of curled hog hairs, said hairs each being in arcuate form and disposed substantially in a single plane, comprising distributing said hairs in a layer, and while passing the layer in one general direction subjecting some of the hairs at the top of said layer to a reciprocating movement in a direction lateral to said direction whereby individual hair curls in a top surface of said layer are brought into a position in which the planes of their curls are to a greater extent out of alignment with the plane of the surface of the mat, treating the layer thus formed with a liquid rubber dispersion, and without compressing the hairs after such treatment subjecting the mat to heat treatment to vulcanize the rubber dispersion.

ALBERT H. ZEIGLER.

REFERENCES CITED

The following references are of record in the file of this patent:

UNITED STATES PATENTS

Number	Name	Date
27,345	Bloodgood et al.	Mar. 6, 1860
1,164,591	Alexander	Dec. 14, 1915
1,321,576	Wakeman	Nov. 11, 1919
1,612,732	Kinne	Dec. 28, 1926
1,679,100	Sturgis	July 31, 1928
1,777,231	Shepard	Sept. 30, 1930
2,093,709	Casse	Sept. 21, 1937
2,122,473	Hurst	July 5, 1938
2,154,476	Simpson et al.	Apr. 18, 1939
2,206,059	Slayter	July 2, 1940
2,245,874	Robinson	June 17, 1941
2,385,873	Melton	Oct. 2, 1945

FOREIGN PATENTS

Number	Country	Date
15,012	Great Britain	1885
375,540	Great Britain	June 30, 1932
771,513	France	July 30, 1934