United States Patent

Costanzo, Jr.

[15] **3,653,317**

[45] **Apr. 4, 1972**

[54] LOUVERS

[72] Inventor: **Nicholas Joseph Costanzo, Jr.**, 5106 Brentford Road, Rockville, Md. 20853

[73] Assignee: **Etelson, Costanzo & Associates**, Silver Spring, Md.

[22] Filed: **Dec. 22, 1969**

[21] Appl. No.: **887,068**

[52] **U.S. Cl.** **98/110**, 98/121

[51] **Int. Cl.** **F24f 13/00**

[58] **Field of Search** 98/121, 110

[56] **References Cited**

UNITED STATES PATENTS

2,987,985	6/1961	Johnson	98/121
3,333,525	8/1967	Tischuk	98/121
3,422,744	1/1969	Tarnoff	98/121

Primary Examiner—Meyer Perlin
Attorney—Lowe and King

[57] **ABSTRACT**

A louver includes a sill, header and jambs, all having the same cross section including a wall with a longitudinally extending slot therein. Spacers are inserted in the slot of each jamb and include means extending beyond the jamb wall toward the other jamb for supporting louver blades. The blades have a uniform cross section throughout the length thereof which is slightly less than the separation between the walls of the two jambs. In an embodiment wherein the blades are fixed, the spacers have sloping top and bottom edges which cooperate with flanges on the jambs for holding the blades in situ. In another embodiment wherein the blades are pivotable, the spacers include fingers which fit into slots in the blades.

16 Claims, 9 Drawing Figures

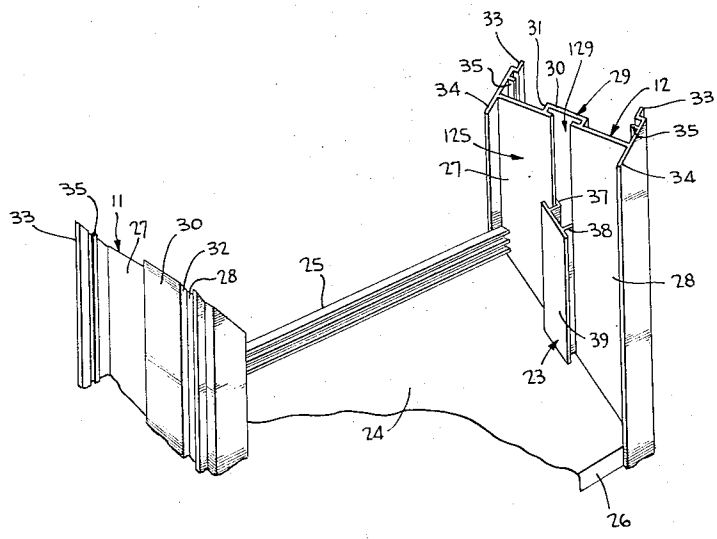

Patented April 4, 1972 3,653,317

3 Sheets-Sheet 1

FIG. 1

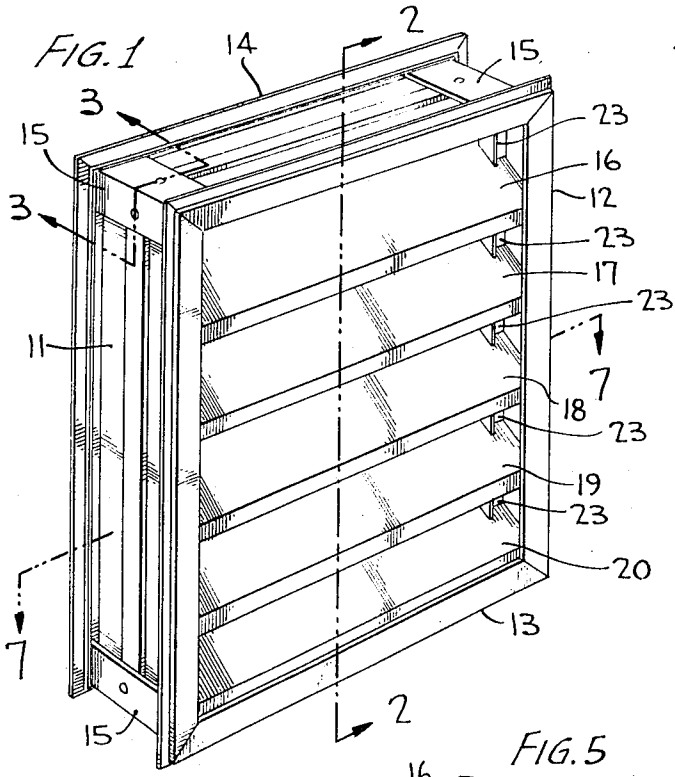

FIG. 2

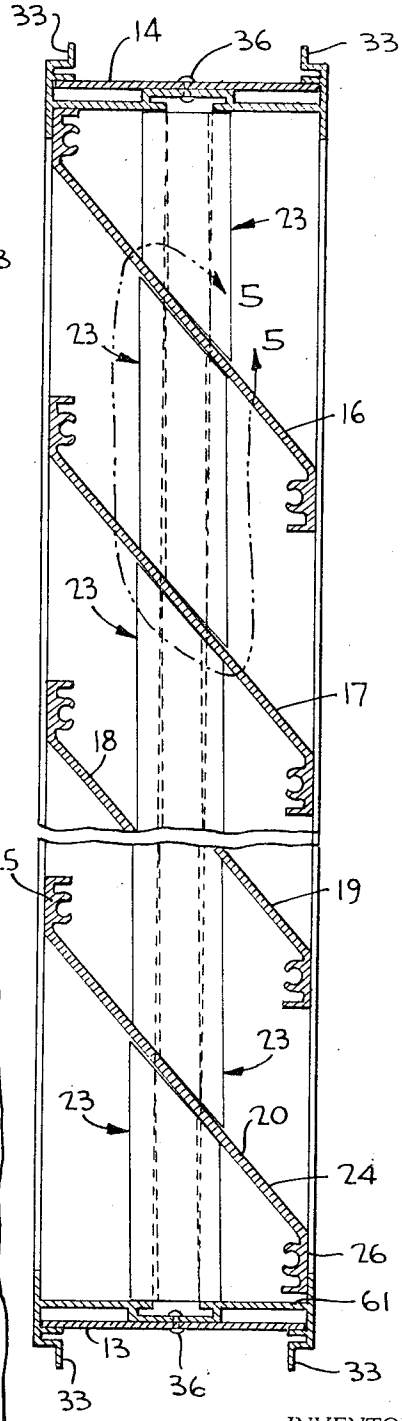

FIG. 3

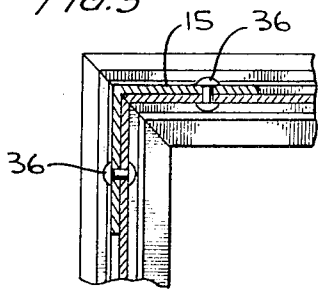

FIG. 4

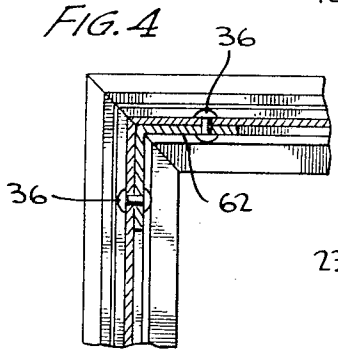

FIG. 5

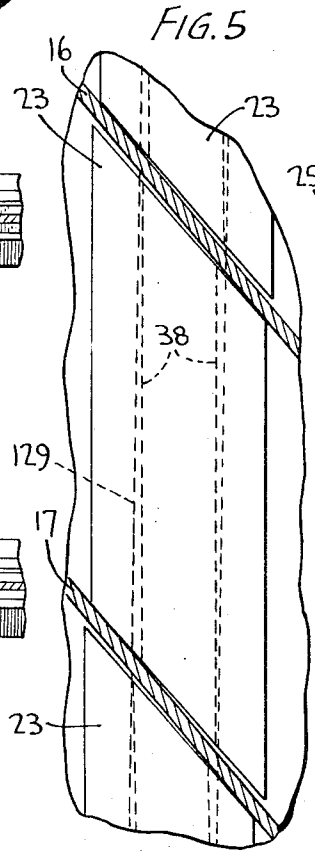

INVENTOR,
NICHOLAS JOSEPH COSTANZO, JR.

BY Lowe & Kuig

ATTORNEYS

FIG. 6

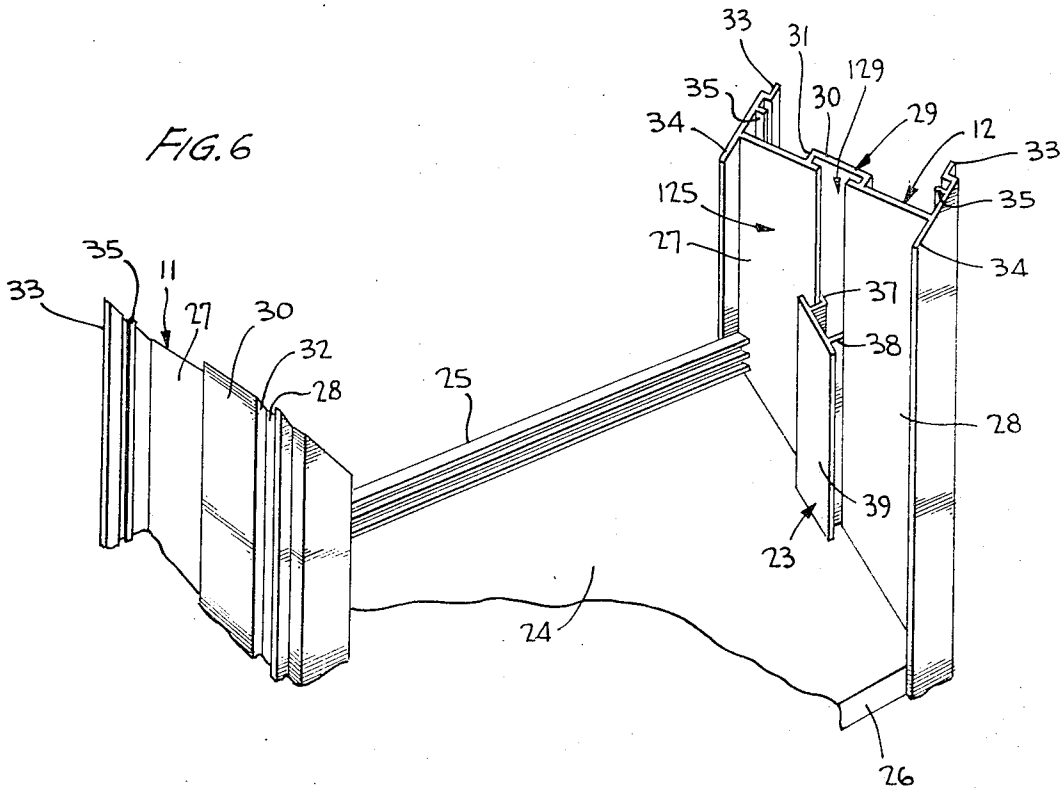

FIG. 7

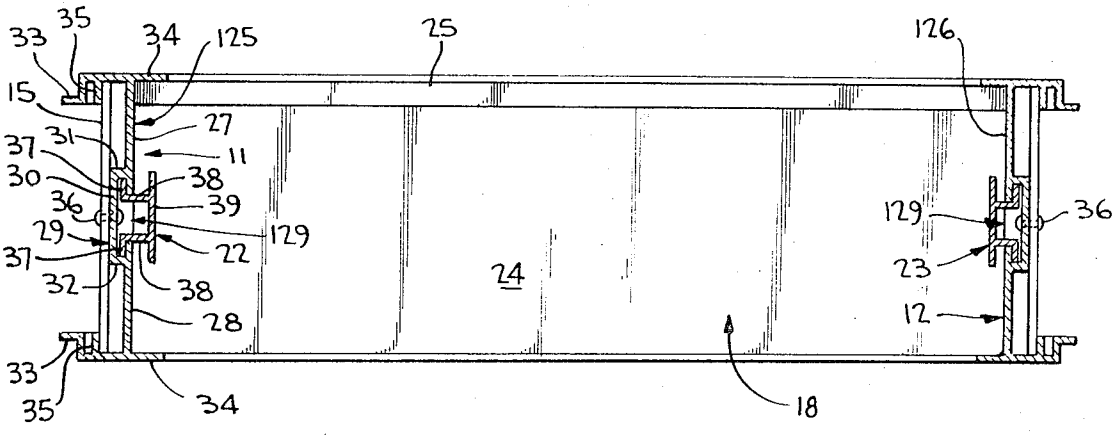

INVENTOR,
NICHOLAS JOSEPH COSTANZO, JR.

BY Lowe & King

ATTORNEYS

FIG. 8

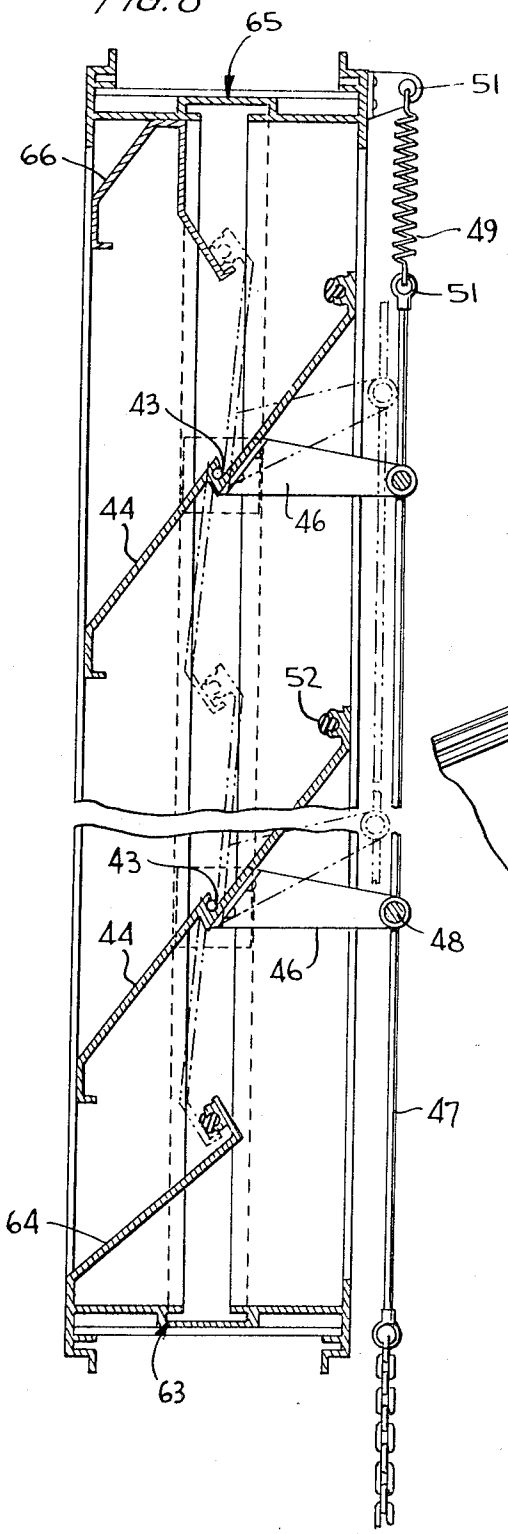

FIG. 9

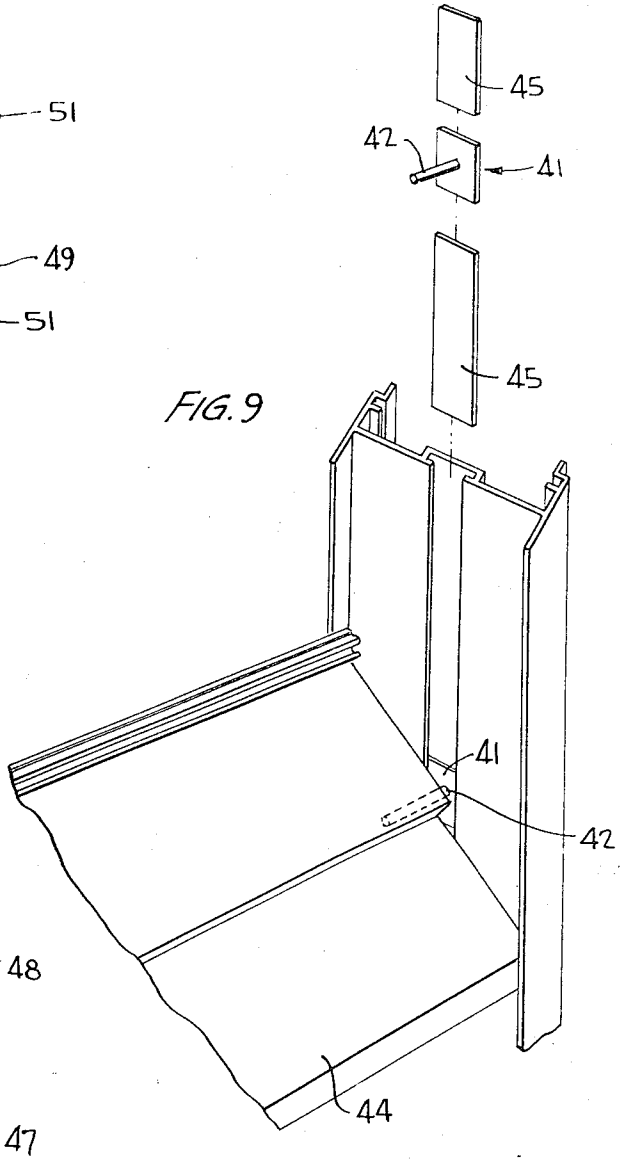

INVENTOR,
NICHOLAS JOSEPH COSTANZO, JR.

BY Lowe & Kuig

ATTORNEYS

LOUVERS

The present invention relates generally to louvers and, more particularly, to a louver having jambs, each having a wall with a longitudinally extending slot carrying spacers extending beyond the wall toward the other jamb to support louver blades.

In all commercially available louvers of which I have knowledge, the several elements constituting the louver are bonded or welded together. Welding the elements of the louver requires assembly of the louver at a fabricating plant and obviates the ability to send a louver to a construction site in an unassembled, knocked down form. In addition to the cost of shipping assembled louvers between an assembly location and a construction site, the prior art practice has occasionally resulted in damage to the louvers while they are in transit. A further disadvantage in welding louver assemblies together is that louvers cannot be anodized prior to assembly because no method for welding anodized aluminum has been developed. It is desirable for many architectural purposes to provide an anodized louver because of the various colors which can be imparted to the louver by the anodization technique. Another disadvantage with the generally utilized construction technique is that the several elements can be utilized only once. If it is decided to change the size of a particular louver or if the louver is not fabricated exactly to specification, it is usually necessary to dispose of the entire louver assembly. If the several sections of the louver could be disassembled, and thereby be readily stored, these sections could frequently be utilized for another job.

In accordance with the present invention, there is provided a louver which can be assembled at a construction site since it requires no welds, but merely a frictional fit and pop rivets for securing the various elements together. By avoiding the necessity to weld the various elements of the louver together, the above-indicated disadvantages of presently available assemblies are obviated.

While I am aware of patented developments by others relating to louvers that need not be welded, to my knowledge none has received commercial acceptance. These patented louvers appear to be generally beset by practical problems which apparently have obviated the other advantages associated therewith. In one of these previously designed louvers, blades of the louver have an unusual, triangular-like cross-sectional shape, while in another instance the blades are provided with ears that extend into elongated slots provided in vertically extending jambs. A further patented louver includes slotted jambs and blades having slots enabling the blades to fit into a channel formed by a jamb slot. Still another patented louver requires jambs having a flange thereon with notches in the flange to receive louver blades.

The louver having the unusual triangular-like blade configuration has the inherent disadvantage of materially restricting the flow of air through the blades. Hence, one of the primary purposes of louvers, to enable an appreciable amount of air to flow through the assembly, is obviated and a substantial impedance to the flow of air through the louver is presented. The patented louver requiring an ear on each blade is inherently unstable from a mechanical viewpoint because the ears are subject to being broken as they are appendages at the end of relatively lengthy blade elements. The patented structure directed to a louver wherein slotted blades are inserted into a channel would appear to possess problems with regard to tolerance in cutting the slots after the louver has been formed. The same problem appears to exist with the louver wherein slots are formed in flanges on the jambs.

In accordance with the present invention, there is provided a louver assembly which does not require welding of the various elements and appears to obviate the disadvantages of previously developed louver assemblies with the same general feature. The result is attained by providing a louver with jambs each of which has a wall with an elongated slot into which spacers are fit. Each spacer includes means extending beyond the slotted wall toward the jamb opposite from the jamb in which it is located for supporting a blade of the louver. Thereby, conventional louver blades can be utilized and need not extend into the jamb slots into which the spacers are placed.

A feature of the present invention is that elements having the same cross section can be utilized as jambs for louvers having fixed and pivotable blades, as well as for sills and headers of assembled louvers. This feature is of considerable advantage in minimizing the inventory requirements of a louver supplier.

In an embodiment wherein the louver is of the fixed blade type, the spacers have sloping top and bottom edges for supporting the blades and frictionally holding them in situ. The blades are maintained securely in situ by the lower and upper surfaces thereof digging into the upper and lower corners, respectively, of each spacer. Additional frictional force exists between vertically extending flanges on the blades contacting flanges on the jambs.

In the embodiment wherein rotatable blades are provided, at least some of the spacers include a finger to engage a slot on each blade, enabling the blade to be pivoted about the finger in response to actuation of an operator.

It is, accordingly, an object of the present invention to provide a new and improved louver assembly wherein requirements for welding or bonding the several elements comprising the assembly are obviated.

Another object of the invention is to provide a louver assembly having jambs that can be utilized in combination with either fixed or rotatable blades.

Another object of the present invention is to provide a louver assembly wherein the requirement for welding or bonding the elements thereof is obviated and blades of conventional design, without slots or ears, can be utilized.

Still another object of the invention is to provide a louver assembly wherein the requirement for welding or bonding the several elements together is obviated and relatively loose tolerances in the manufacture of the several elements can be tolerated.

The above and still further objects, features and advantages of the present invention will become apparent upon consideration of the following detailed description of several specific embodiments thereof, especially when taken in conjunction with the accompanying drawings, wherein:

FIG. 1 is a perspective view of a preferred embodiment of a louver having fixed blades;

FIG. 2 is a sectional view taken through the line 2—2 of FIG. 1;

FIG. 3 is a sectional view taken through the line 3—3, FIG. 1, and specifically illustrating the manner by which a jamb and header or sill are connected together;

FIG. 4 is an illustration of an alternate construction for fastening a jamb and header or sill together;

FIG. 5 is an enlarged view of a portion of FIG. 2, illustrating specifically the area designated by the dotted lines 5—5 and the manner by which louver blades frictionally engage spacers;

FIG. 6 is a perspective view of the louver assembly illustrated by FIG. 1 with the louver header removed;

FIG. 7 is a cross-sectional view taken through the line 7—7 of FIG. 1;

FIG. 8 is a cross-sectional view illustrating the construction of a louver assembly in accordance with the present invention wherein the louver blades are rotatable; and

FIG. 9 is a perspective view of the embodiment illustrated by FIG. 8, specifically illustrating the construction of spacers for the rotatable blade embodiment and how the spacers are placed in the jambs.

In a preferred embodiment of the present invention, the elements of the louver are extruded aluminum. It is to be understood that other materials and techniques for forming the elements can be employed if desired.

Reference is now made to FIGS. 1–3, and 5–7, wherein there is illustrated a louver assembly having a frame including

vertically extending side members or jambs **11** and **12** which are spaced from each other by an extent determined by the length of sill **13** and header **14**. The assembled frame comprising jambs **11** and **12**, sill **13** and header **14** is held together by angles **15**, one of which is located at each of the four corners of the frame. Positioned between jambs **11** and **12** is a plurality of fixed louver blades **16–20**. Blades **16–20** are maintained in situ solely by frictional engagement with jambs **11** and **12**, as well as spacers **22** and **23** which fit into jambs **11** and **12**, respectively. Due to the construction of jambs **11** and **12** and spacers **22** and **23**, blades **16–20** are of conventional construction, including a sloping panel **24** and vertical flanges **25** and **26** that extend from the top and bottom edges of the panel. Blades **16–20** have a uniform cross section throughout the length thereof and have an extent slightly less than the separation of vertical, facing walls **125** and **126** of jambs **11** and **12**, respectively.

The shape and cross section of jambs **11** and **12**, sill **13** and header **14** are identical, and are best illustrated in FIGS. **6** and **7**; since these elements have the same configuration, a description of one will suffice for the remainder. In cross section, jamb **11** includes a wall **125** divided into a pair of elongated sections **27** and **28** by elongated, centrally located slot **129** that runs the length of the jamb. Sections **27** and **28** are connected together by channel **29** having a web **30** that is joined to the sections by flanges **31** and **32**. Web **30** extends substantially beyond the adjacent edges of wall sections **27** and **28** so that slot **129** has a significant extent behind sections **27** and **28**. Flanges **34**, extending at right angles from the edges of sections **27** and **28** and inwardly toward the center of the louver assembly, engage flanges **25** and **26** on the front and rear edges of panels **24** of the blades. The inwardly facing edges of flanges **34** engage the exterior edges of flanges **25** and **26**. To maintain angle pieces **15** in situ, jamb **11** includes a pair of transversely extending flanges **35**, which extend parallel to sections **27** and **28** and are brought into engagement with the outer vertically extending edges of the angle piece, as illustrated in FIG. **3** and FIG. **7**. The angle piece **15** fits between flanges **35** and web **30** of channel **29** and is secured to the web by pop rivet **36**. If necessary, a similar pop rivet connection can be provided between the horizontal surface of angle piece **15** and sill **13** and/or header **14**.

To enable jamb **11** to be secured to suitable openings in a vent frame structure, flanges **33**, extending in a direction away from the center of the louver frame, are provided.

Each of spacers **22** or **23**, except those adjacent sill **13** and header **14**, has downwardly sloping top and bottom edges that engage the end portions of panel **24**. The upper edge of the spacer adjacent header **14** and the lower edge of the spacer adjacent sill **13** are horizontally disposed but the other edges of these spacers slope downwardly. Each spacer has a length governed by the desired spacing between the several louvers, but is typically slightly less than the vertical distance separating the upper and lower edges of louver flanges **25** and **26**. In cross section, each spacer includes a pair of ears **37** which extend outwardly from side walls **38** and into the portion of slot **129** behind wall sections **27** and **28**. Side walls **38** extend through slot **129** toward jamb **12**, the jamb opposite from jamb **11** which carries spacer **22**. Walls **38** are connected together by the spacer front wall **39** that has an extent between the edges of jam **11** greater than the separation between side walls **38**. Since ears **37** and walls **39** extend beyond the edges of slot **128** movement of the spacers in a direction normal to the longitudinal axis of slot **129** is limited while enabling the spacers to slide freely along the length of the slot. It is important for side walls **38** and front wall **39** of spacer **22** to extend beyond face **125** of jamb sections **27** and **28** so that blades **16–20** can have the conventional shape and cross section and to preclude the need for ears or slots at the ends of the blades.

To indicate more specifically the frictional engagement between blades **16** and **17** and spacers **23**, reference is now made to the enlarged view of FIG. **5**. In FIG. **5**, it is clearly illustrated the manner by which the front and top corner edges of spacers **23** engage the underneath surfaces of panels **24** of blades **16** and **17** and the back and bottom corner edges of the blades engage the upper surfaces of the louver blade panels. In response to the weight imposed on the spacers **23** by the blades and header **14** resting thereon, there is a slight rotation of spacers **23** about the vertically extending axis of slot **129**, whereby the spacers are held in better frictional contact with the blades. The rotation can occur because of a slight separation between the exterior faces of walls **38** and the edges of sections **125** and **126** that define the sides of slot **129**. It has been found that the rotation of the spacers about the vertically extending axis of slot **129** is sufficient to enable the corners of the spacers to dig slightly into the top and bottom faces of the blade panels **24** by an amount to prevent substantial rotation of the blades once the louver has been assembled. The frictional engagement of spacers **23** and the louver blades is augmented by the flush vertical contact between blade flanges **25** and **26** and flanges **34** on jambs **11** and **12**.

The first step in assembling the louver of FIGS. **1–3** is to insert the horizontally extending legs of corner angles **15** between flanges **35** and web **30** at either end of sill **13**. Jambs **11** and **12** are thereafter slid into the vertically extending legs of angle piece **15**, so that the flanges **35** and webs **30** of these jambs engage the inner and outer faces of the legs of the angles. Pop rivets **36** are then inserted to securely join the horizontal and vertical sides of angle pieces **15** to sill **13** and jambs **11** and **12**. Bottom spacers **22** and **23**, having straight bottom edges at right angles to the sides thereof and sloping top edges, are now inserted in slot **129**. The straight portions of bottom spacers **22** and **23** engage wall **61** of sill **13**.

Blade **20** is thereafter inserted to engage the upper, sloping surface of bottom spacers **22** and **23**. Preferably, the length of bottom spacers **22** and **23** is sufficiently great to prevent the lower edge of blade **20** engaging any portion of sill **13**. After blade **20** has been inserted, a further pair of spacers **22** and **23** is inserted in slots **129** in jambs **11** and **12**.

Next, blade **19** is inserted and rests against the upper edge of the spacers **22** and **23** which rests on blade **20**. In response to the weight of blade **19**, the spacers resting on blade **20**, and the bottom spacers are rotated to attain the frictional engagement described supra. The insertion of additional spacers and blades continues in the manner described and as required for the particular assembly until top spacers **22** and **23**, having horizontally extending, nonsloping top edges are inserted into slots **129**.

Virtually the last step is to insert top corner angles **15** into the left and right edges of header **14** between flanges **35** and web **30**. These angle pieces may be secured to header **14** by pop rivets. The header is then joined to jambs **11** and **12** by inserting the vertically extending portion of angle pieces **15** into the jambs so that the angle pieces fit between flange **35** and web **30**. The assembling operation is completed by joining the vertically extending arms of angle pieces **15** to jambs **11** and **12** with a pop rivet, as illustrated in FIG. **7**.

While the angle pieces are illustrated in FIGS. **1–3**, and **5–7** as fitting between flanges **35** and web **30**, it is to be understood that angles **62** requiring a smaller amount of metal may be provided if they are fitted interiorly of slots **129** in the jambs, sill and header, as illustrated in FIG. **4**.

Reference is now made to FIGS. **8** and **9** of the drawings wherein there is illustrated another embodiment of the invention wherein the spacers are particularly adapted to be utilized in conjunction with pivotable louver blades. In the embodiments of FIGS. **8** and **9**, the jambs have exactly the same cross-sectional shape and configuration as in the fixed louver assembly of FIGS. **1–7**. The sill and header have the same slot configuration as the sill and header of the fixed blade assembly but do differ slightly from the jamb and header of FIGS. **1–7**. In particular, sill **63** is provided with an upwardly directed sloping panel **64**, while header **65** includes a downwardly directed, sloping panel **66**. Panels **64** and **66** provide fixed surfaces for rotatable louvers **44** to engage to enable a tight clo-

sure to be obtained if desired. The jambs, sill and header in the rotatable louver embodiment can be secured to each other by either of the angles illustrated by FIGS. 3 and 4.

The significant difference between the rotatable and fixed blade embodiments is in the construction of the spacer. In both instances, the spacer includes an extension beyond slot 129 for carrying the louver blades. In the embodiment of FIGS. 8 and 9, the spacer means for supporting the louver blades includes a substantially square plate 41 from which a finger, in the form of cylindrical pin 42, extends in a direction toward the jamb opposite from the jamb carrying spacer 41. Pin 42 is slid into cylindrical slot 43 in the center of pivotable louver blades 44. To provide the required spacing between adjacent square plates 41, rectangular plates 45 are inserted between the square plates. To maintain plates 41 and 45 within slot 129, the plates have a lateral extent greater than the separation of sections 27 and 28 of wall 125 of jambs 11 and 12.

Louvers 44 are rotated in a manner well known to those skilled in the art and by any suitable actuator. For example, an arm is connected to and extends centrally from each of louvers 44 and is pivotally connected to rod 47 by pins 48. Rod 47 is connected to header 14 by spring 49, which in turn is connected at either of its ends to eyelets 51. To provide a seal between the upper and lower mating surfaces of adjacent louver blades 44, the upper blade of each is provided with a plastic gasket 52 that extends completely across the length of the blade.

In operation, the rotatable louver of FIGS. 8 and 9 operates in the normal manner in response to vertical translation of shaft 47, which causes the blades to be rotated, as illustrated in FIG. 8 by the dotted line construction. To enable louvers to be closed completely, as illustrated, spacers 45 must be of sufficient and appropriate length to enable gaskets 52 to be closed on the bottom flanges of adjacent louvers.

While there have been described and illustrated several specific embodiments of the invention, it will be clear that variations in the details of the embodiments specifically illustrated and described may be made without departing from the true spirit and scope of the invention as defined in the appended claims.

I claim:

1. An assembled louver comprising a pair of spaced jambs forming side members of a frame, each of said jambs having a wall with a surface having a longitudinally extending slot therein, a plurality of louver blades fitting between said jambs, each of said blades having an extent throughout its length less than the distance between the surfaces of the spaced jambs, a plurality of spacers fitting into each of said slots, said spacers including means extending beyond the slot and behind the surface in a direction away from the other jamb for maintaining the spacers in the slot, said spacers including means extending from the slot and beyong the surface of the jamb into which it fits towards the other jamb by a sufficient amount to support the blades between the jambs, said blades being supported on at least some of the spacers by the means extending towards the other jamb.

2. The louver of claim 1 wherein said jamb wall includes a pair of sections divided by said longitudinally extending slot, said wall including means forming a channel covering the slot and connecting the sections together, said channel having an extent greater than the width of the slot, and a flange on each of the sections extending in a direction opposite from the direction the channel extends from the sections, the channel of each jamb extending from the wall of the jamb on which it is located in a direction away from the other jamb, the flanges on each jamb having an extent toward the other jamb sufficient to limit movement of the blades.

3. The louver of claim 2 wherein the spacers have sloping top and bottom edges on a wall positioned outside the slot and extend towards the other jamb, said edges being the means to support the blades between the jambs, each of said blades including vertically extending flanges extending from opposite edges thereof, the flanges on the blades engaging the flanges on the jambs.

4. The louver of claim 1 wherein said jamb wall includes a pair of sections divided by said longitudinally extending slot, said wall including means forming a channel covering the slot and joining the sections together, said channel having an extent greater than the width of the slot, and a flange on each of the sections extending in a direction opposite from the direction the channel extends from the sections, each of said spacers extending into the channel of the jamb on which it is located beyond the width of the slot.

5. The louver of claim 4 wherein the spacers have sloping top and bottom edges on a wall positioned outside the slot and extend towards the other jamb, said edges being the means to support the blades between the jambs.

6. The louver of claim 1 wherein at least some of the spacers comprise: first wall means extending through the slot of the jamb into which the spacer is fit, a pair of oppositely extending ears positioned on the wall means extending into the slot beyond the width of the slot, second wall means connected to the first wall means extending in a direction parallel to the wall of the jamb outside of the slot beyond the width of the slot, said second wall means having top and bottom sloping edges for frictionally engaging bottom and top surfaces of the blades, respectively.

7. The louver of claim 1 wherein said frame includes a sill and a header, means for connecting said jambs, sill and header together, said sill, header and jambs all having substantially the same cross section.

8. The louver of claim 1 wherein at least some of said spacers have sloping top and bottom edges for maintaining the blades rigidly in situ to form the means to support the blades between the jambs.

9. The louver of claim 1 wherein at least some of said spacers include a finger to form the means to support the blades between the jambs, said blades including means adapted to receive the fingers to enable the blades to rotate about the fingers.

10. The louver of claim 1 wherein each of said jambs includes a pair of flanges extending longitudinally of the jambs and in a direction toward the other jamb, each of the jamb flanges being substantially at right angles to the wall of the jamb on which it is located, one of said flanges being provided on each side of the slot, said blades including a sloping portion and vertically extending flanges, the flanges on the blades frictionally engaging the flanges on the jamb.

11. In combination, a pair of spaced louver jambs, louver blades, spacers for supporting said blades, each of said jambs comprising a wall having a pair of sections divided by a longitudinally extending slot, said wall including means forming a channel covering the slot and connecting the sections together, said channel having an extent in a direction transverse to the slot longitudinal axis greater than the width of the slot for receiving said spacers, said spacers including an ear portion in the channel extending beyond the slot and behind at least one of the sections and another portion extending through and beyond said slot in a direction opposite from the channel and towards the other jamb, said blades being supported at their ends only by the portion of the spacer extending beyond the slot.

12. The combination of claim 11 wherein each of the blades has vertically extending flanges, each of said sections including a flange extending in a direction toward the other jamb for frictionally engaging the flanges on the blades.

13. A louver assembly comprising a pair of jambs adapted to be spaced from each other to form side members of a louver frame, each of said jambs having a wall with a surface having a longitudinally extending slot therein, a plurality of louver blades adapted to fit between said jambs, each of said blades having an extent throughout its length less than the distance between the surfaces of the jambs adapted to be spaced from each other, a plurality of spacers adapted to fit into each of said slots and to be maintained therein, said spacers including

means extending beyond the slot and behind the surface in a direction away from the other jamb, said spacers including means adapted to extend from the slot of the jamb into which it is adapted to fit and beyond the surface of the jamb towards the other jamb by a sufficient amount to support the blades between the jambs.

14. The assembly of claim **13** wherein said frame includes a sill and a header, means adapted to connect said jambs, sill and header together, said sill, header and jambs all having substantially the same cross section.

15. The assembly of claim **13** wherein at least some of said spacers have sloping top and bottom edges adapted to maintain the blades rigidly in situ to form the means adapted to support the blades between the jambs.

16. The assembly of claim **13** wherein at least some of the spacers include a finger to form the means adapted to support the blades between the jambs, said blades including means adapted to receive the fingers to enable the blades to rotate about the fingers.

* * * * *