(No Model.)

J. REID, Jr.

TACK DRAWING IMPLEMENT.

No. 456,679. Patented July 28, 1891.

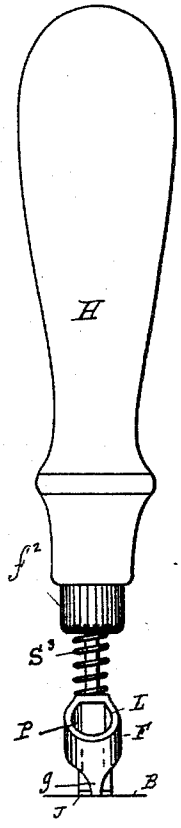

Fig 5

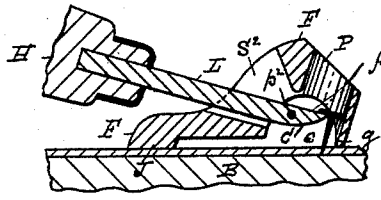

Fig 3

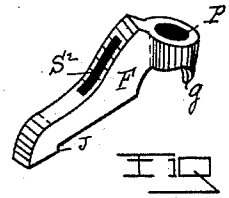

Fig 4

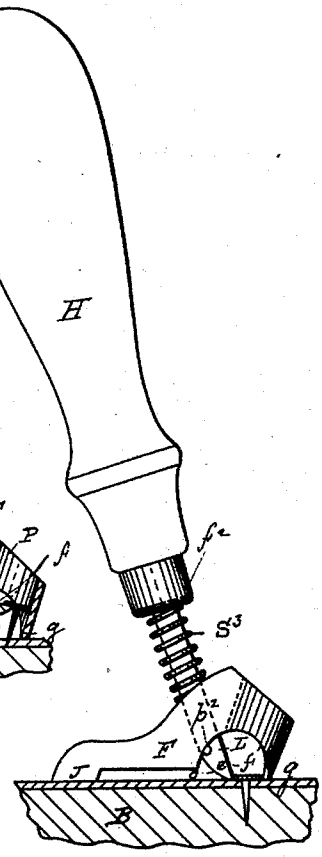

Fig 7

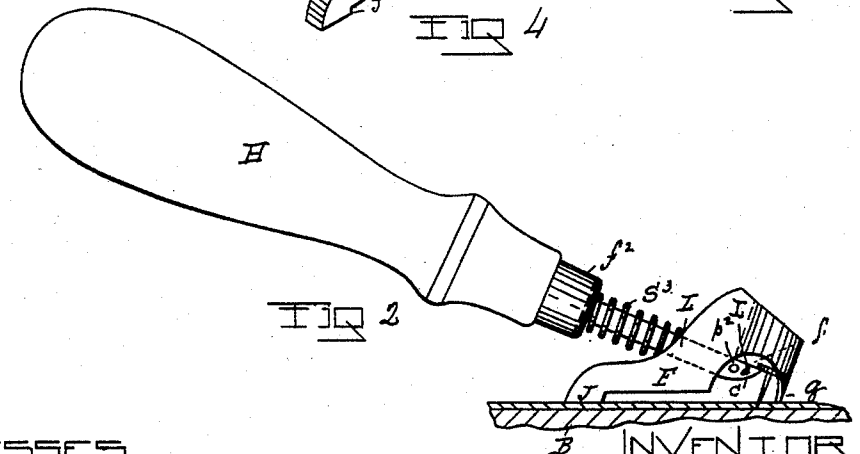

Fig 2

WITNESSES
William A. Sweet
Alexander S. Brintnall

INVENTOR
James Reid Jr.
by McHenry an atty

THE NORRIS PETERS CO., PHOTO-LITHO., WASHINGTON, D. C.

UNITED STATES PATENT OFFICE.

JAMES REID, JR., OF SEYMOUR, CONNECTICUT, ASSIGNOR OF ONE-HALF TO WILLIAM HAGEN, OF TROY, NEW YORK.

TACK-DRAWING IMPLEMENT.

SPECIFICATION forming part of Letters Patent No. 456,679, dated July 28, 1891.

Application filed July 3, 1890. Serial No. 357,613. (No model.)

To all whom it may concern:

Be it known that I, JAMES REID, Jr., of the village of Seymour, county of New Haven, and State of Connecticut, have invented a new and useful Improvement in Tack-Drawing Implements, of which the following is a specification.

My invention relates to improvements in tack-drawing implements; and the object of my invention is to better adapt such devices to the uses for which they are designed.

Accompanying this specification to form a part of it there is a sheet of drawings containing five figures illustrating my improvements and invention, with the same designation of parts by letter reference used in all of them.

Of these illustrations, Figure 1 is a side elevation of my improved tack-drawing implement, with the same shown as engaging at the initial movement in drawing a tack. Fig. 2 shows the position of the same parts that are shown at Fig. 1 after having been operated to raise the tack. Fig. 3 shows a section taken centrally and longitudinally through the slotted body of the foot-piece of the implement, with the tack-lifter shown in section. Fig. 4 is a perspective of the foot-piece, shown as detached from the tack-lifter and handle. Fig. 5 is a top view of the implement.

The several parts of the implement thus illustrated are designated by letter reference, and the function of the parts is described as follows:

The letter F designates a foot-piece that is made of metal, having the longitudinally-made and centrally-located slot S^2 constructed for the insertion and movement therein of the tack-lifter L, and this foot-piece is also made with a tack-passage P, the downwardly-projected tack grip or beak *g*, and the bottom heel projection J. The tack-lifter L has upon its lower end *e* the bottom curved face C, so as to give it, in connection with the straight side face *f*, a chisel form in longitudinal section.

The letter p^2 designates a stop-pin arranged to pass through the tack-lifter, so as to project a little beyond each of its sides, and the function of this stop-pin is to engage with the sides of the slot and prevent the tack-lifter from being drawn out of the foot-piece.

The letter S^3 designates a spiral spring encircling the tack-lifter between the foot-piece and the ferrule f^2 of the handle, against the force of which spring the tack-lifter is forced down through the slot S^2.

The implement thus constructed is used to draw nails or tacks in the following manner: With the implement resting with its supporting foot-piece upon the carpet, oil-cloth, or floor B, from which the nails or tacks are to be drawn, the lifter, by the operation of the handle H, is forced downwardly until its chisel-form edge is at the side of the nail or tack head to be drawn. When this is done and the grip *g* at its lower end is in contact with the nail or tack head opposite to where the tack-lifter end is in engagement with the under side edge of the head, as the handle H is pressed down, with the tack-lifter making its fulcrum in the bottom of the slot, the tack or nail is raised and held between the grasp of the grip *g* and the tack-lifter, as shown at Fig. 2, and from which the tack or nail may be discharged into a receptacle by turning over the implement, so as to allow the tack to pass through the passage P.

The letter J designates a projection made on the under side of the foot F, which prevents the foot-piece from sliding when pressure is applied to the handle to force the tack-lifter through the slot in the foot-piece against the force of the spring S^3.

As thus made and arranged to operate, the tack-lifter and grip are adapted to engage with the heads of different-sized tacks or nails, and by the combined action of the grip *g* and tack-lifter but little disturbance or tearing out of the material in which the tack has been driven is required, for the tack-lifter and grip will even remove the nail by engaging with the opposite sides of the head, although preferably the lifter should be inserted beneath the edge of the head.

Having thus described my invention, what I claim, and desire to secure by Letters Patent, is—

1. In a tack-drawing implement, the combination, with a foot-piece constructed with a downwardly-projected grip and having a slot made longitudinally therein, of a tack-lifting lever arranged in said slot and having a cross-pin in advance of said slot, and a spring en-

circling said tack-lifter back of the foot-piece between the latter and the tack-lifter handle, substantially in the manner as and for the purposes set forth.

2. The combination, with the foot-piece F, made with the slot S^2 and having the projection J on its under surface, the tack-passage P, and grip g, of the tack-lifter L, having the limit-pin p^2, spring S^3, and handle H, constructed and arranged to operate substantially in the manner as and for the purposes set forth.

Signed at Seymour, Connecticut, this 7th day of April, 1890, and in the presence of the two witnesses whose names are hereto written.

JAMES REID, JR.

Witnesses:
W. E. COLT,
S. HART CULVER.