May 20, 1952 H. S. WHITE 2,597,605

ALTERNATE OBJECT DISPLAY APPARATUS

Filed Dec. 14, 1948

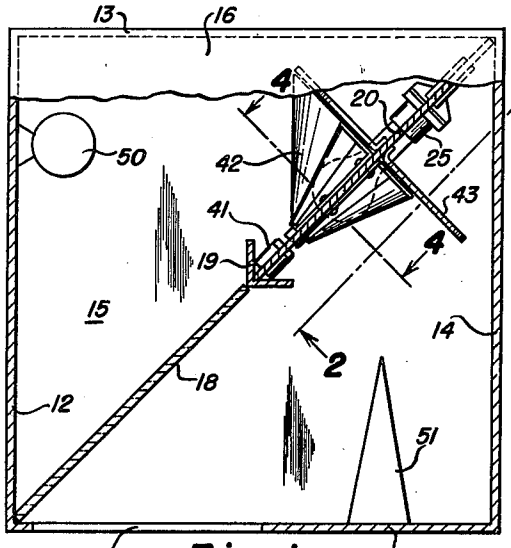

Fig. 1

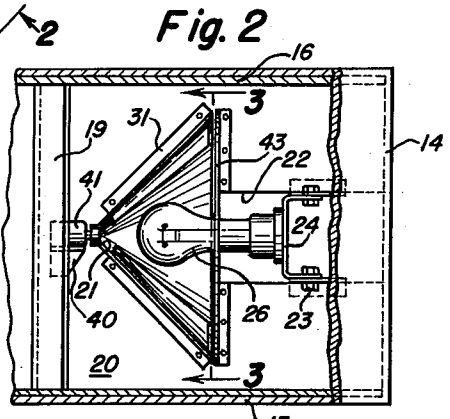

Fig. 2

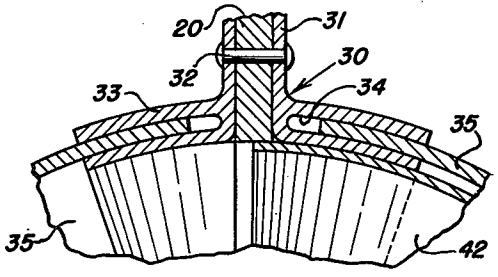

Fig. 4

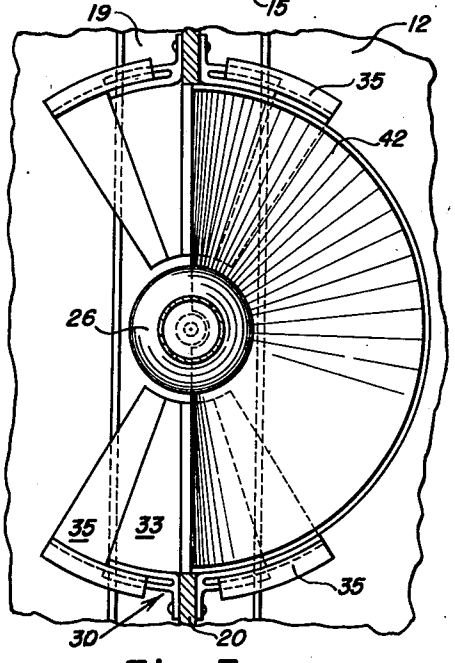

Fig. 3

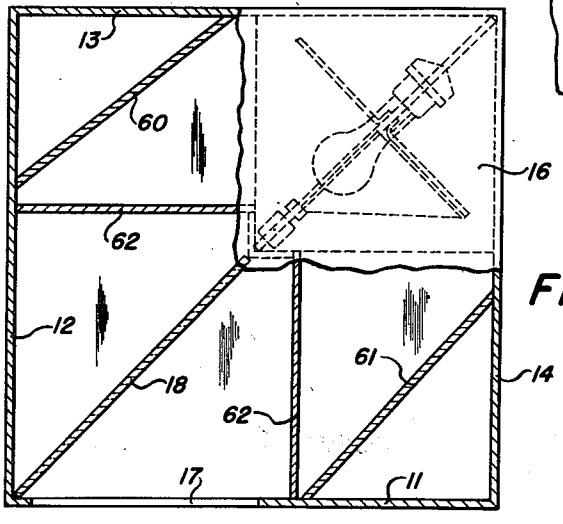

Fig. 5

INVENTOR

Herbert Sidney White

By Edwin A. Block

Attorney

Patented May 20, 1952 2,597,605

UNITED STATES PATENT OFFICE

2,597,605

ALTERNATE OBJECT DISPLAY APPARATUS

Herbert Sidney White, Brooklyn, N. Y.

Application December 14, 1948, Serial No. 65,141

1 Claim. (Cl. 272—8.5)

1

The present invention relates to display apparatus and a primary object thereof is to provide an apparatus wherein changing displays created by optical illusion are effected by means affording uniform timing of transition between full illumination and black out of the displayed matter.

Another object of the invention is to provide an illusion display apparatus wherein the illumination is controlled by a rotary member.

A further object of the invention is to provide illuminated display apparatus having means for selectively regulating the intensity of light directed upon the matter cast upon the viewing screen.

Still another object of the invention is to provide a display apparatus of the aforesaid character which is economical and highly efficient in operation.

Other objects and advantages of the invention will become apparent as the description progresses.

In the accompanying drawing, wherein are illustrated a preferred and a modified embodiment of the invention:

Figure 1 is a top plan view of a preferred form of the apparatus with the major part of the top removed:

Figure 2 is a fragmentary vertical section on line 2—2 of Figure 1;

Figure 3 is an enlarged vertical section taken on line 3—3 of Figure 2;

Figure 4 is an enlarged fragmentary section taken along line 4—4 of Figure 1; and

Figure 5 is a top plan view of a modified form of the apparatus.

Although the apparatus of the invention is applicable to displays of varying size and form, the accompanying drawing, wherein like characters of reference designate corresponding parts throughout, illustrate examples of "magic box" type of display apparatus.

Referring first to Figures 1 to 4, wherein is shown the preferred embodiment of the invention, 10 generally designates a box like cabinet of rectangular form having four vertical exterior walls 11, 12, 13 and 14 rising from a horizontal bottom 15 to a top 16. Wall 11, forming the front of the cabinet, has a viewing opening 17 therein looking into a transparent reflecting member 18. Member 18, which is advantageously a mirror reflecting light on one side or displaying therethrough objects illuminated on its reverse side, is mounted vertically between the top and bottom of the cabinet and extends diagonally

2

from the juncture of walls 11 and 12 to a right angular wall section 19 disposed rearwardly in the cabinet. Thus, reflector 18 assumes an angle of approximately 45° with the front wall 11.

In the rearward corner of the cabinet and coplanar with reflector 18 is a vertical partition wall 20 extending from the angular wall 19 to the corner at the juncture of side walls 13 and 14. In its inward part wall 20 is provided with a triangular shaped opening 21 communicating with a horizontally elongated opening 22 in its outer part. Mounted in opening 22, to swing about a vertical axis on pivot connections 23, is a U-shaped bracket 24 having fixed on its medial portion a socket 25 adapted for connection with a source of electric current. In socket 25 is fitted a light bulb 26 disposed in a horizontal position adapted to project into and swing through opening 21.

To each of the converging edges of opening 21 are secured a pair of complementary baffle supports 30, each support having an attaching flange 31 mounted vertically against a side face of wall 20 with the opposed pair of flanges firmly fastened to the wall, as by rivets 32. The body of each support 30 comprises an elongated transversely curved wing 33 having an outwardly opening slot 34. Fitted within the slot of each wing 33 for frictional sliding adjustment about a conical contour substantially corresponding to the angularity of the converging edges of opening 21 is an arcuately curved baffle plate 35, the complemental pair at each side of partition 20 defining the top and bottom limits of the light aperture.

On a support 40 fixed on the vertical wall section 19 is mounted an electric motor 41 adapted to be wired to a source of current and having its horizontally arranged shaft protruding into wall opening 21. To the shaft of motor 41 is fastened an opaque reflector 42 having the configuration of one-half of the surface of a cone tapered in conformity with the angle of the wings 33 and rotatable with the shaft within opening 21 and about light bulb 26. As reflector 42 covers an angle of approximately 180° it will completely close the light aperture defined by baffles 35 at one side while the aperture at the opposite side of partition 20 is entirely unobstructed during each cycle of operation, as shown at Figure 3. As shown at Figures 1 and 2 a reflecting plate 43 is fixed against the vertical edge of opening 21 in a vertical plane perpendicular to the axis of the shaft of motor 41 so that the light from the light source will be most effectively directed to illuminate zones along walls 11 and 12. As will be

apparent from Figures 1 and 2, light bulb **26** extends horizontally through an opening in the reflecting plate.

During operation, selected objects such as figures **50** and **51**, are placed in the light zones at opposite sides of transparent reflector **18** and, as movable reflector **42** is rotated, the light from bulb **26** is directed through the light apertures upon the respective objects **50** and **51** for reflection upon one side of reflector **18** and for transparent display upon its opposite side, conveying the illusion of objects successively moving past the viewing opening **17**. During its movement reflector **42** gradually admits light through one aperture while closing the other and, during each cycle of revolution, attains a position wherein one aperture is fully open and the reverse aperture is completely closed so as to effect a gradual fading of one display as the other brightens. By varying the speed of motor shaft rotation the periods of transition between maximum illumination can be readily controlled. Moreover, the intensity of light in either or both object containing zones may be regulated by angular adjustment of baffles **35** on wings **33** to vary the size of the light apertures. The degree of illumination can also be adjusted by swinging the bulb and its support bracket with respect to its pivot mounting, in a horizontal arc, and within the confines the conical travel of reflector **42**, where the nature of the set up is such that greater intensity of light at one side than the other improves the effect.

For the display of pictorial and like matter in lieu of three dimensional objects the apparatus may advantageously be modified as shown in Figure 5 to provide additional reflectors, such as reflecting plates **60** and **61** mounted vertically in the light zones at the respective sides of reflector **18**. These auxiliary reflectors function to direct the light rays, cast by the bulb through the respective side apertures, through picture panels **62** mounted vertically in the cabinet at each side of the viewing reflector perpendicular to walls **11** and **12**. These panels may be transparent slides and the like.

By provision of the light reflecting and screening member rotative about the light source, uniform timing of the cycles of illumination and black out with intervening transition periods is obtained with convenient control of timing through the intermediacy of known motor or other forms of speed regulation. The adjustability of the aperture baffles and lamp are also conducive of better matter projection upon the display screen.

It will be obvious to those skilled in the art that various changes may be made in the invention without departing from the spirit and scope thereof and therefore the invention is not limited to that which is shown in the drawing and described in the specification but only as indicated in the appended claim.

What is claimed is:

In a display apparatus, a closed rectangular cabinet having a view opening in one side, a vertical transparent reflecting screen extending diagonally in said cabinet, an opaque partition arranged in coplanar relation with said screen and provided with an opening medially therein, a lamp mounted in said opening, a pair of diametrically opposed conically shaped baffles mounted on said partition and within the opening thereof and providing light apertures therebetween, said baffles being formed to provide plate guiding slots, a light directing member rotative about a horizontal axis and within said baffles to successively direct light through the apertures between said baffles, and curved plates slidably fitted in the slots of the baffles and circumferentially adjustable therein to selectively vary the size of the baffles and the light apertures between the baffles.

HERBERT SIDNEY WHITE.

REFERENCES CITED

The following references are of record in the file of this patent:

UNITED STATES PATENTS

Number	Name	Date
1,900,059	Hayter	Mar. 7, 1933
1,993,836	Gill et al.	Mar. 12, 1935