July 28, 1959 J. F. BARNES ET AL 2,896,839

PACKAGE FOR DRINK-FORMING POWDERS

Filed July 26, 1955 3 Sheets-Sheet 1

Fig. 1

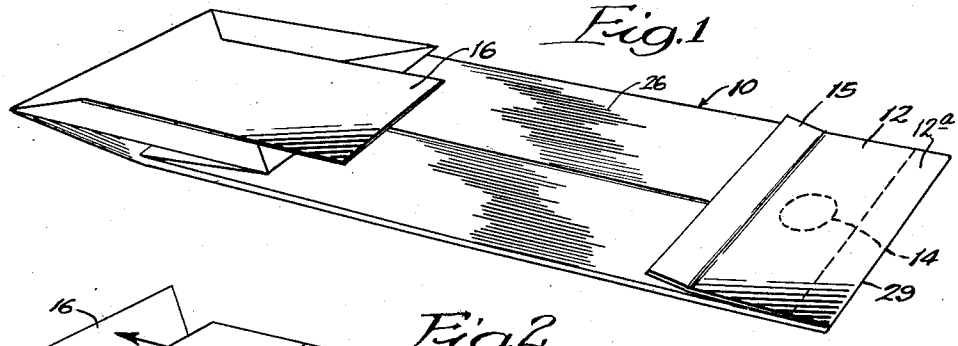

Fig. 2

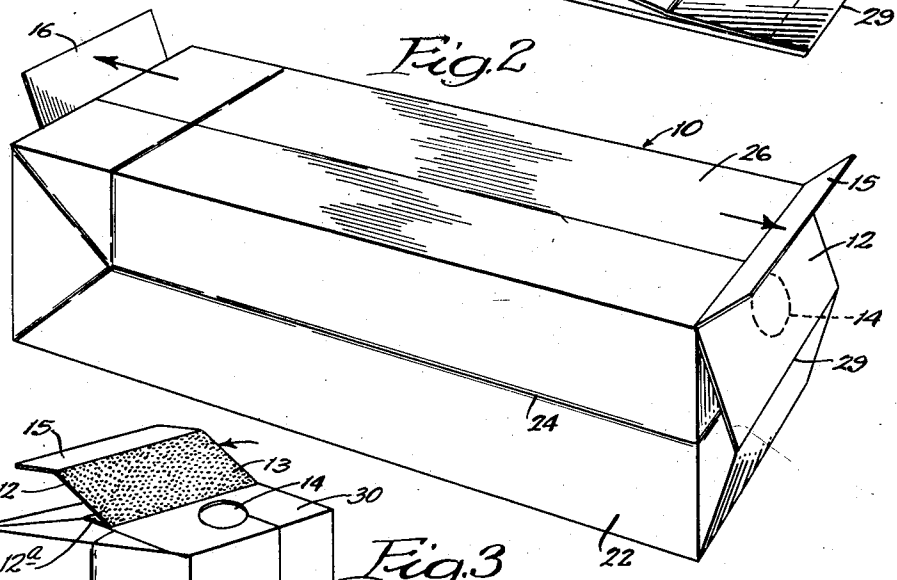

Fig. 3

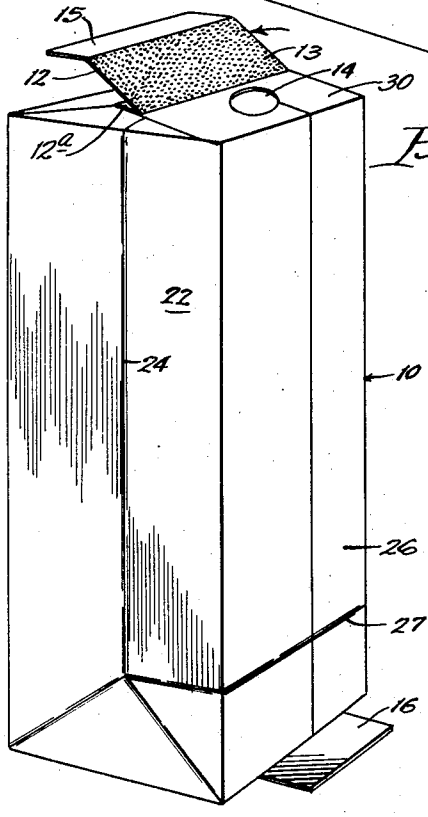

INVENTORS:
Elmer P. Rebholz and
BY James F. Barnes,
Dawson, Gilton & Graham,
ATTORNEYS.

July 28, 1959 J. F. BARNES ET AL 2,896,839

PACKAGE FOR DRINK-FORMING POWDERS

Filed July 26, 1955 3 Sheets-Sheet 2

Fig. 4

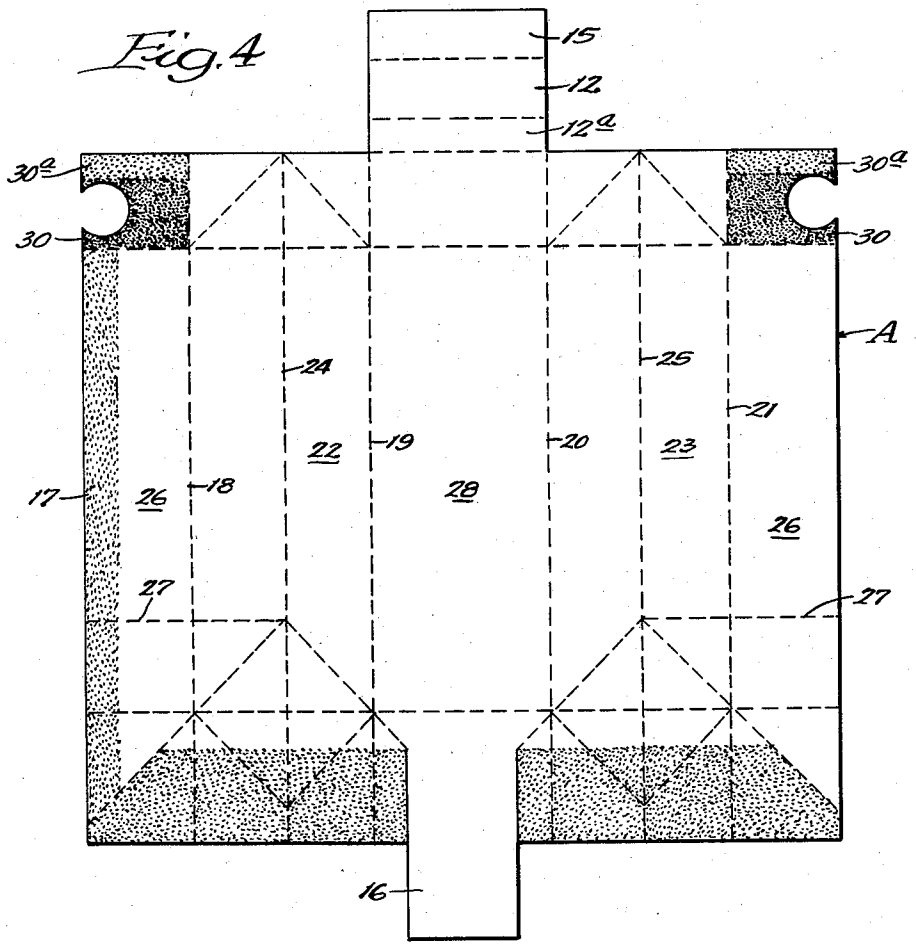

Fig. 5

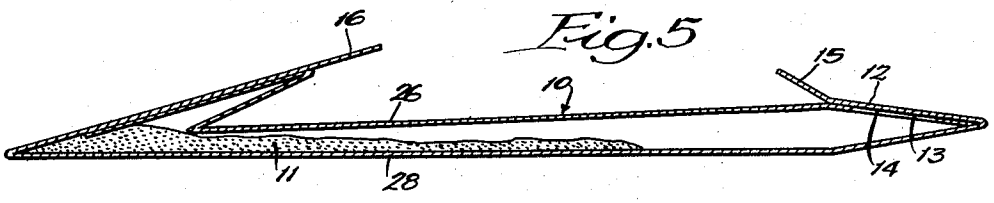

INVENTORS:
Elmer F. Rebholz and
BY James F. Barnes,
Dawson, Tilton & Graham,
ATTORNEYS.

July 28, 1959 J. F. BARNES ET AL 2,896,839

PACKAGE FOR DRINK-FORMING POWDERS

Filed July 26, 1955 3 Sheets-Sheet 3

Fig. 6

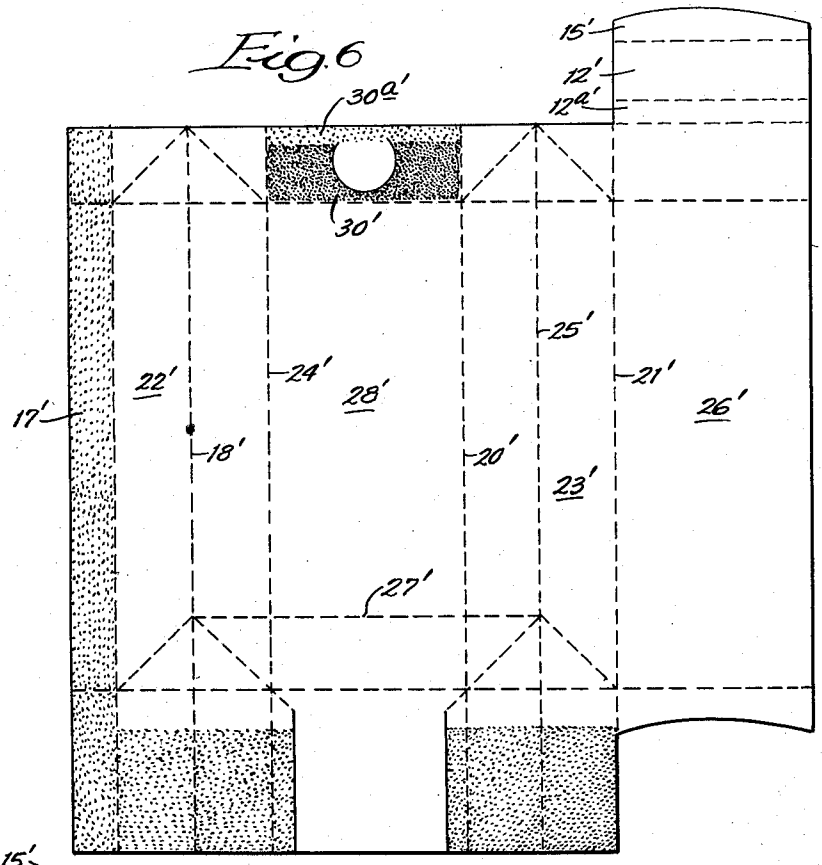

Fig. 7

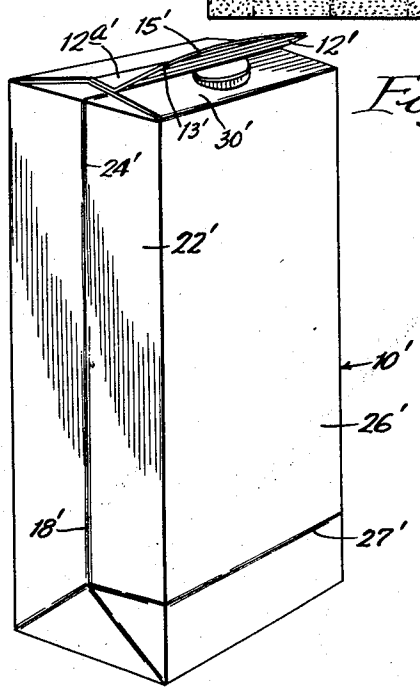

INVENTORS:
Elmer F. Rebholz and
BY James F. Barnes,
Dawson, Tilton & Graham,
ATTORNEYS.

United States Patent Office

2,896,839

Patented July 28, 1959

2,896,839

PACKAGE FOR DRINK-FORMING POWDERS

James F. Barnes, Van Nuys, Calif., and Elmer F. Rebholz, St. Louis, Mo., assignors to Foil Process Corporation, Van Nuys, Calif., a corporation of California

Application July 26, 1955, Serial No. 524,316

1 Claim. (Cl. 229—62)

This invention relates to a package for drink-forming powders, and more particularly to a package adapted for the distribution of drink-forming powders and the solubilization or dispersion thereof to form a drink without removing it from the package, while thereafter providing a convenient storage and dispensing container for the drink. The package of this invention has particular utility as a powdered milk package.

It is a general object of this invention to provide a package of novel construction for the distribution and subsequent formation of powders into drinks. More specifically, it is an object to provide a package of the character described which occupies a minimum volume during distribution through the channels of commerce, while being readily expandable to provide an enlarged volume for containing the drink, such as reconstituted milk. A still further object is to provide in a package of the character described, means for bringing the package container from a collapsed to an expanded condition. Another specific object is to provide closure means for the package which permits it to be opened for the introduction of water thereto in forming the powder into a drink, while being resealable to permit the powder and water to be shaken together without the escape of liquid from the package. Further objects and advantages will become apparent as the specification proceeds.

This invention is shown in an illustrative embodiment in the accompanying drawings, in which—

Figure 1 is a perspective view of a package constructed in accordance with this invention, showing the package in collapsed condition; Figure 2 is a perspective view similar to Figure 1, showing the package in expanded condition; Figure 3, a perspective view also showing the package in expanded condition with the cover flap lifted to disclose the opening in the top of the container; Figure 4, a plan view of a cut, scored and glue-coated blank from which the carton used in forming the package of Figures 1 to 3 can be constructed; Figure 5, a longitudinal sectional view of the package as shown in Figure 1; Figure 6, a plan view similar to Figure 4, showing a modified blank; and Figure 7 is a perspective view of the container which can be formed from the modified blank of Figure 6.

As already indicated, this invention is concerned with a package for a drink-forming powder, such as mild powders, fruit juice powders, etc. Preferably, the package comprises a collapsible and expandable carton of waterproof material, the carton being in collapsed condition and having a quantity of the drink-forming powder therein, the quantity being such as to form a liquid volume of the drink approximately equal to the volume of the carton when expanded. It is preferred to provide the carton with releasable closure means at the upper end of the carton.

Turning to the embodiment shown in the drawings, and looking first mainly at Figures 1 and 5, it can be seen that the collapsible and expandable carton **10** contains a quantity of the drink-forming

powder **11** therein. Carton **10** can be formed of any suitable waterproof sheet material, although wax-coated cardboard is preferred. The aluminum foil laminate described in our co-pending application Serial No. 462,010, filed October 13, 1954 can also be advantageously used as the sheet material. For example, the drink-forming powder **11** can be any of the types of powdered milk which are commercially available, and can be reconstituted by mixing with an appropriate volume of water. If desired, other water-soluble or water-dispersible substances can be mixed with the milk powder, such as cocoa powder, food flavoring substances, etc. Any other powder which is capable of forming a drink can be used instead of powdered milk.

In the illustration given, the top of carton **10** is provided with a releasable closure or cover flap **12**. Cover flap **12**, as shown more clearly in Figure 3, is coated on its underside with a pressure-sensitive, releasable adhesive **13** to permit the flap to be lifted and swung upwardly to disclose opening **14** therebeneath. If desired, the portion **30** of the carton beneath flap **12** can be additionally or alternatively coated with a pressure-sensitive releasable adhesive as indicated on the carton blank of Figure 4. Cover flap **12** also has an outwardly extending tab portion **15** which has various purposes as will subsequently be described. Its rearwardly extending portion **12***a* is preferably secured with a permanent adhesive to carton **10**, such an adhesive being indicated at **30***a* in Figure 4. Both tab portion **15** and portion **12***a* are preferably separated from flap **12** by fold lines as shown in Figures 1 to 4.

The bottom of container **10** provides an outwardly extending tab **16** on the same side as the tab **15**. As indicated in Figure 2, when tabs **15** and **16** are drawn apart with opening **14** exposed, container **10** will be open from the collapsed condition of Figure 1 to the expanded condition of Figure 2, thereby greatly increasing the volume within the container and providing space for the introduction of water through opening **14**, which can readily be done by raising cover flap **12**. Then the cover flap can be resealed over opening **14** by applying a light pressure thereto, and the added water and milk powder can be shaken together to form the reconstituted milk. After the reconstitution of the milk, container **10** will provide a convenient storage and dispensing vessel.

Figure 4 shows a cut, scored and glue-coated blank A from which container **10** can be formed by suitable folding operations. As a first step, glue-coated edge portion **17** can be secured to the opposite edge portion of the blank, thereby forming a tube which is rectangular or square in cross section, the necessary folds being made along corner fold lines **18**, **19**, **20** and **21**. The top and bottom ends of this tube are then closed, the necessary folds being made along the dotted lines as indicated in Figure 4, so that the completed top and bottom portions of container **10** appear as shown in Figures 1 to 3 and 5. All of the adhesive indicated on the blank should be of the permanent type, except that which is applied to cover flap **12**. As already indicated, this adhesive coating **13** should be of the releasable, pressure-sensitive type, and when the top of the container is formed it is preferred to leave the cover flap unsealed so that the completed carton will appear as shown in Figure 3. A measured quantity of powdered milk or other drink-forming powder can then be introduced through opening **14** before the sealing of flap **12**. Alternatively, the bottom of container **10** can be closed, and the milk powder introduced through the open top end before the top is formed. At any rate, before the top of the carton is sealed but after the introduction of the milk powder, the carton should be collapsed so that it will appear as shown in Figure 1. In the illustration given, this is readily accomplished by

tucking side walls **22** and **23** inwardly along vertically extending fold lines **24** and **25**. Fold lines **24** and **25** provide side walls **22** and **23** respectively with a pleated construction so that these side walls can extend inwardly when the carton is collapsed.

To provide for the collapsing of container **10** to a flat condition, it is also preferred to provide a fold line on side wall **26** near the bottom thereof but at a spaced distance about tab **16**, this fold line being indicated in the drawings by the number **27**. The other side **28** of the carton is fold-free and flat, as illustrated more clearly in Figures 4 and 5. By means of the fold line **27** on side **26**, the carton bottom can be folded upwardly onto side wall **26**, as illustrated in Figure 1.

As shown more clearly in Figure 2, the top of carton **10** has a central fold line **29** extending thereacross between pleated sides **22** and **23**, which fold line provides a hinge for cover flap **12**, while permitting the top to be doubled onto itself when the carton is collapsed, as illustrated more clearly in Figure 5.

Figures 6 and 7 of the drawing illustrate a modified form of the invention, Figure 6 showing a cut, scored and glue-coated blank from which the carton of Figure 7 can be formed. The corresponding parts of the carton of Figures 6 and 7 have been given the same numbers as the carton previously described, except that the numbers have been primed to indicate they refer to a modified construction. The method of forming the blank of Figure 6 into the carton of Figure 7 is substantially the same as that employed in forming the blank of Figure 4 into the carton of the other figures, as previously described. Therefore, it is not believed to be necessary to describe the specific folding and gluing procedure for the blank of Figure 6. However, it is desired to point out that the carton of Figure 7 when employed for the purpose of this invention possesses certain advantages. One of these advantages results from the fact that the pleated side panels **22'** and **23'** are of lesser width than the front and rear panels **26'** and **28'**. Consequently, when the carton **10'** is collapsed, the inwardmost extension of the pleats, which will be represented by fold lines **18'** and **25'**, will be short of the carton center line. In other words, even at their inwardmost extension, the pleated side panels will be spaced from each other. This has the advantage of permitting an easier filling of the cartons from a collapsed condition. The liquid entering through opening **12'** will then flow downwardly to the carton bottom between the inwardly extending side panels much more freely than if the side panels were in contact with each other in the collapsed condition of the carton.

It will also be noted that the carton of Figure 7 is not provided with an outwardly extending tab portion at the bottom thereof, such as tab **16** in the first-described embodiment. With the construction of the container of Figure 7, it has been found that the weight of the water as it is introduced through opening **12'** is sufficient to expand the carton from a collapsed to a fully erect condition. This then eliminates the necessity of using a pull tab to expand the carton before the introduction of water. More specifically, with the carton of Figure 7 collapsed and filled with a drink-forming powder, as illustrated for the first-described embodiment in Figure 5, the cover flap **12'** is separated from carton portion **30'** by means of tab **15**, leaving opening **12'** exposed. With the carton in an upright but still collapsed condition, water is then introduced through opening **12'**, flowing downwardly to the bottom of the carton between the inwardly extending side panels **18'** and **22'** and **23'**. The weight of this water expands the carton by pushing the side panels outwardly until they reach the position shown in Figure 7. In this position, the carton can be completely filled with liquid for the reconstitution of the drink-forming powder therein.

While this invention has been described in relation to a particular embodiment thereof, it will be apparent to those skilled in the art that the invention is susceptible to other embodiments without departing from the basic ideas of the invention, and that many of the details set forth herein can be varied widely.

We claim:

A container adapted for use with a drink-forming powder, comprising a collapsible and expandable carton of waterproof sheet material, said carton in expanded condition comprising a rectilinear tube with a closed top and bottom, two oppositely-disposed side walls of said tube being pleated to extend inwardly when said carton is collapsed, the other two side walls of said tube being flat when said carton is collapsed, the top wall of said carton having a central fold line extending thereacross between said two pleated sides and arranged to permit said top to fold outwardly onto itself when said carton is collapsed, each of the centrally divided portions of said top wall forming an extension of the adjacent one of said flat side walls when said carton is collapsed, and releasable closure means comprising a flap extending from said central fold line of said top wall over one-half of said top wall, said covered portion of said top wall providing an opening of smaller dimensions than said flap.

References Cited in the file of this patent

UNITED STATES PATENTS

2,078,467	Sterling	Apr. 27, 1937
2,171,718	Vogt	Sept. 5, 1939
2,286,465	Clement	June 16, 1942
2,361,877	Schell	Oct. 31, 1944
2,475,236	Gollub	July 5, 1949
2,697,531	Hood	Dec. 21, 1954
2,752,002	Wied	June 26, 1956

FOREIGN PATENTS

393,199	Great Britain	June 1, 1933
537,874	Germany	Nov. 7, 1931