J. SHEBOL & W. F. ALBRECHT.

PRESSURE GAGE.

APPLICATION FILED FEB. 18, 1913.

1,127,295. Patented Feb. 2, 1915.

Fig. 1.

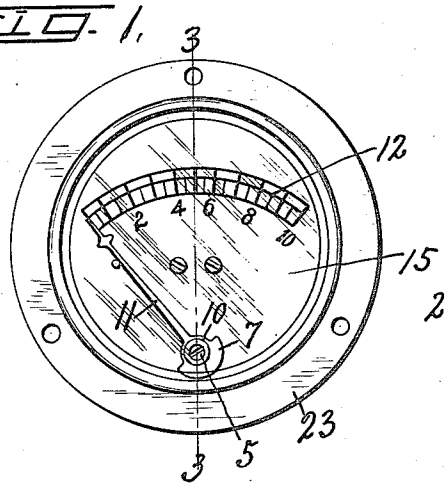

Fig. 2.

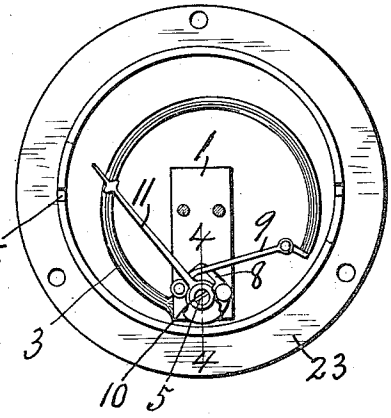

Fig. 3.

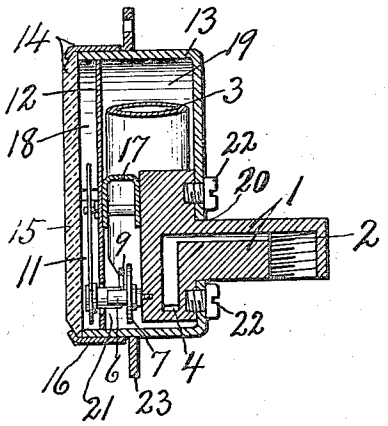

Fig. 4.

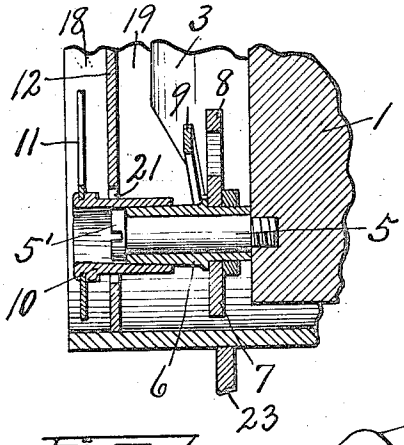

Fig. 5.

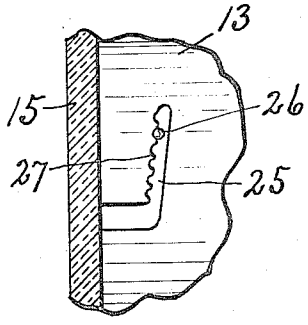

Fig. 6.

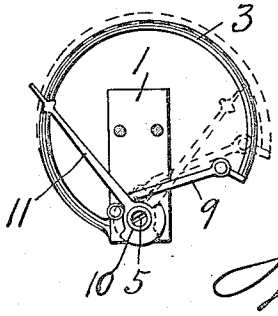

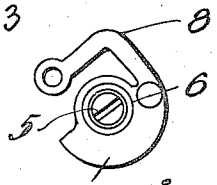

Fig. 7.

WITNESSES:

H. Wurst,

H. E. Chase

J. Shebol and W. F. Albrecht INVENTORS

BY Howard P. Denison ATTORNEY.

UNITED STATES PATENT OFFICE.

JOSEPH SHEBOL AND WILLIAM F. ALBRECHT, OF SYRACUSE, NEW YORK.

PRESSURE-GAGE.

1,127,295. Specification of Letters Patent. Patented Feb. 2, 1915.

Application filed February 18, 1913. Serial No. 749,091.

To all whom it may concern:

Be it known that we, JOSEPH SHEBOL and WILLIAM F. ALBRECHT, of Syracuse, in the county of Onondaga, in the State of New York, have invented new and useful Improvements in Pressure-Gages, of which the following, taken in connection with the accompanying drawings, is a full, clear, and exact description.

This invention relates to certain improvements in pressure gages of the class set forth in our Patent No. 1,002,877, September 12, 1911, and also in our pending application No. 739,460, filed December 31, 1912, except that, in the present application, the object is to establish frictional connection between the index finger and its locking support to permit said finger to be separately adjusted for proper reading of a predetermined pressure and also to permit the instrument to be easily and quickly calibrated to varying pressures. In other words, we have sought to provide for two adjustments, one of which is adapted to adjust the rocking member independently of or together with the index finger, and the other to permit the index finger to be adjusted independently of its rocking support or Bourdon tube to which the rocking member is linked. These gages are used largely for indicating tire and other pressures of automobiles and is frequently screwed in an opening in the dash directly in front of the seat.

Another object of the invention is to provide the case with an axially adjustable flange frictionally fitted upon the periphery thereof and adapted to be secured to the dash by screws or other fastening means at different points between the ends of the case according to the thickness of the dash or degree of projection which it may be desired to obtain for the front of the indicator.

A further object is to provide the case with a telescoping cover held in place by a bayonet lock and a serrated edge of one side of the angular slot forming a part of the bayonet lock, thus increasing a frictional lock between the main body of the case and cover for more positively holding the cover in operative position and, at the same time, permitting it to be removed when necessary to adjust the indicating mechanism.

Other objects and uses will be brought out in the following description.

In the drawings—Figure 1 is a front face view of a pressure gage embodying the various features of our invention. Fig. 2 is a face view of the same gage with the dial and cover removed to show the interior mechanism. Fig. 3 is a transverse vertical sectional view of the same pressure gage taken on line 3—3, Fig. 1. Fig. 4 is an enlarged vertical sectional view through the lower front portion of the main body of the case taken on line 4—4, Fig. 2, showing more particularly the locking member and hub of the index finger in frictional telescoping engagement therewith. Fig. 5 is an enlarged hollow sectional view of a portion of one side of the main body and cover of the case showing the bayonet lock connection. Fig. 6 is a face view of the detached Bourdon gage and its supporting post together with the index finger and the link connection between the locking support for said finger and free end of the tube. Fig. 7 is a top plan of the rocking member having the bendable arm.

In carrying out the objects stated, we provide a T-shape post —1— with an inlet passage —2— communicating with one end of a Bourdon tube —3— which is secured to one side of the post and extends around and to the opposite side thereof so that its opposite end is free to expand and contract under pressure of the fluid which may enter the same.

The post is preferably disposed in a horizontal position so that its head is vertical, one end of the inlet opens through the bottom of the outer end of the stem while the opposite end opens through the side of the head into the adjacent end of the hollow tube —3—, the communicating passage between the inlet —2— and the tube —3— being indicated at —4—, Fig. 3. A stud or screw —5— is screwed or otherwise secured into the front side of the head of the post —1— and projects forwardly some distance therefrom and terminates in a head —5—'. Upon this stud or post is journaled a hub —6— of a rocking member —7—, the two parts being firmly secured together by a wedging fit or by other suitable fastening means so that they will rotate together upon the stud —5—.

The main body of the rocking member —7— is provided with a laterally projecting curved arm —8— extending partially around and some distance from the hub —6— and having its free end bendable toward and from said hub or axis of the rock-

ing member for rotary adjustment of the index finger in a manner presently described. The free end of the bendable arm is pivotally connected to one end of a link —9— having its opposite end pivotally connected to the free end of the tube —3— as shown more clearly in Figs. 2 and 6. The tube —3— is circular and resilient and is tensioned to normally hold the rocking member —7— in a predetermined position when not under pressure.

The periphery of the hub —6— of the rocking member is preferably tapered toward its front end for receiving an internally tapered hub —10— of an index finger —11—. The hub of the index finger is, therefore, slidable telescopically upon the hub —6— of the rocking member to establish frictional locking engagement therewith, thus permitting the index finger to be adjusted rotarily upon and relatively to the rocking member to facilitate calibration of the dial and also to enable the index finger to register with the number of graduations on a dial —12— corresponding with a predetermined pressure.

The head of the post —1— together with the Bourdon tube and pressure-indicating mechanism is housed within a sheet metal case —13— having a suitable cover —14— telescoping therewith, the main body of the case being preferably cylindrical and stamped from a single piece of sheet metal while the cover is provided with a transparent or glass front plate —15— and a metal annular flange —16— made so as to hold the glass plate in operative position against the front edge of the main body of the case when the parts are assembled as shown in Fig. 3. The dial —12— is also circular and tightly fitted within the front portion of the case where it is secured to the post by a suitable fastening member or bracket —17— thereby dividing the interior of the case into front and rear compartments —18— and —19—.

The Bourdon tube together with the head of the post —1— and greater portion of the rocking member —7— are mounted within the compartment —19—, the back of the case being provided with an opening —20— through which the stem of the post —1— is adapted to extend for connection with the source of fluid pressure, not shown.

The front compartment —18— between the dial —12— and glass plate —15— receives the index finger —11— and is connected to the rocking member —7— through an opening —21— in a dial close to the bottom of the case. The head of the post —1— is secured to the inner face of the back of the case by suitable fastening means, as screws —22—, Fig. 3.

As previously intimated the main body of the case is cylindrical and preferably of uniform diameter from end to end and upon the periphery of this cylindrical portion is frictionally fitted an annular flange or ring —23— which, although tightly fitted upon the case may be adjusted under pressure axially thereof so as to allow a greater or less portion of the case to break through an opening in the dash, not shown, and, when the flange is properly positioned upon the case, it is held solely by friction and may be secured by suitable fastening means to the dash to hold the entire gage in operative position thereon.

Another distinct feature of our invention is that the case and cover are held in operative relation by a bayonet lock consisting in this instance of an angular slot —25— in one side of the main body of the case and opening through the front edge thereof as shown more clearly in Fig. 5, the arm or flange —16— of the cover being provided with an indentation forming a projection —26— which, when the cover is in proper position registers with the open end of the slot —25— and by turning the cover rotarily the projection —26— will be shifted into the lateral branch of the slot. This branch or offset portion of the slot is disposed at an angle with the plane of the front face of the case so as to incline from the open end of the slot toward the back of the case, the outer edge of the slot being provided with a series of serrations —27— with which the projection —26— is adapted to frictionally interlock to hold the cover more firmly against accidental turning and at the same time permitting it to be turned when necescary to remove the cover from the main body of the case.

The telescoping hub portions of the rocking member —7— and index finger —11— are disposed between the ends of the tube —3— in the lower portion of the case so as to allow the use of a comparatively long index finger which is movable around a concentric graduated portion of the dial —12— as shown more clearly in Fig. 1.

What we claim is:

1. In a fluid pressure gage, a circular spring tube fixed at its inlet end, a relatively fixed pivotal stud parallel with the axis of the tube near the fixed end thereof, a rock arm having an externally tapered hub journaled on the stud, said rock arm being bent about the axis of the stud and having its free end some distance from its point of attachment to the hub and bendable toward and from said hub to vary the throw of an index finger, a link connecting the free end of the bendable arm with the free end of the tube, and an index finger having an externally tapered hub fitted upon the first named hub to turn with said arm and to be turned independently thereof by hand.

2. In a fluid pressure gage, a circular case, a fluid inlet conduit having a portion thereof secured within the case and another portion thereof protruding through one side thereof, a circular spring tube secured to one side of the conduit within the case and returning to the opposite side thereof, a pivotal stud secured to the conduit within the case, a dial within the case having an opening therethrough registering with the stud, a rock arm having an externally tapered hub journaled on the stud and its free end extended circumferentially around the outside of the hub some distance from its point of attachment thereof and bendable toward and from said hub, a link connecting the free end of the arm with the free end of the tube, and an index finger having an externally tapered hub projecting through the opening in the dial and fitted upon the tapered portion of the first named hub so as to turn with the rock arm and to be turned by hand independently of the rock arm.

In witness whereof we have hereunto set our hands this 14th day of February 1913.

JOSEPH SHEBOL.
W. F. ALBRECHT.

Witnesses:
H. E. CHASE,
EVA E. GREENLEAF.