Dec. 29, 1964 C. J. CHAPLIN 3,163,312

PACKING FOR FRAGILE ARTICLES

Filed June 29, 1962 2 Sheets-Sheet 1

FIG. 1

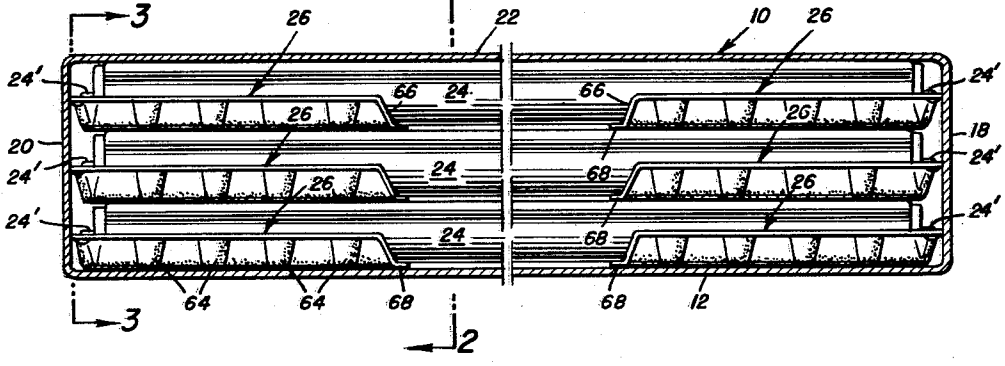

FIG. 2

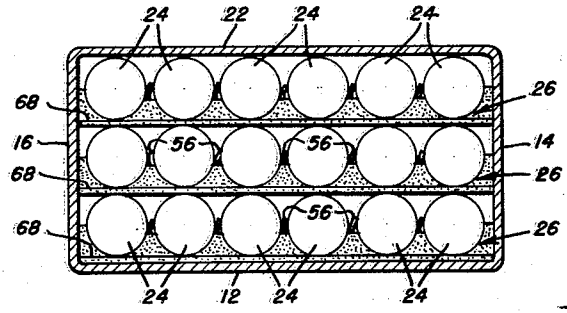

FIG. 3

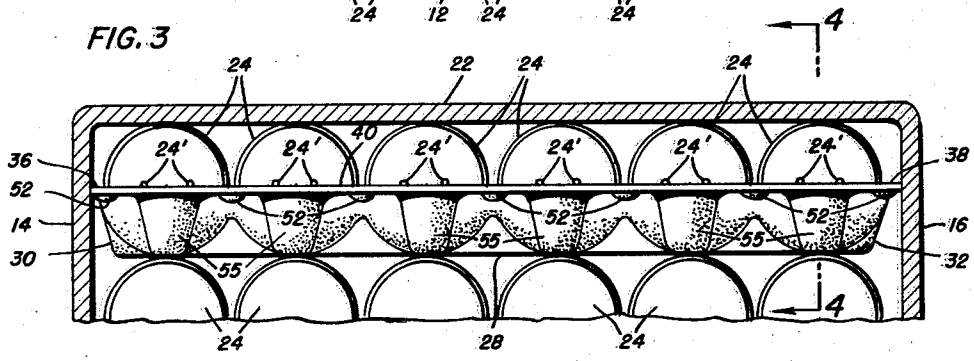

FIG. 4

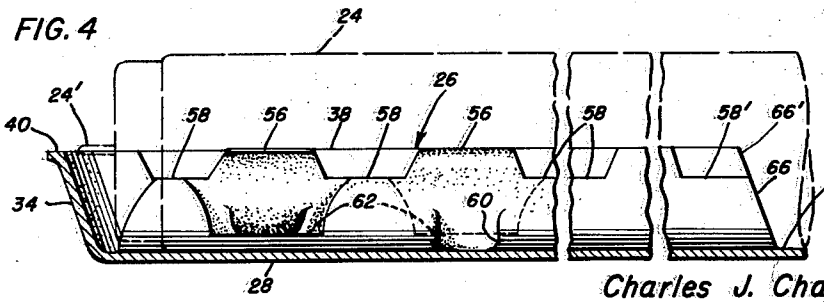

INVENTOR

Charles J. Chaplin

BY KARL W. FLOCKS

ATTORNEY

Dec. 29, 1964 C. J. CHAPLIN 3,163,312

PACKING FOR FRAGILE ARTICLES

Filed June 29, 1962

2 Sheets-Sheet 2

FIG. 5

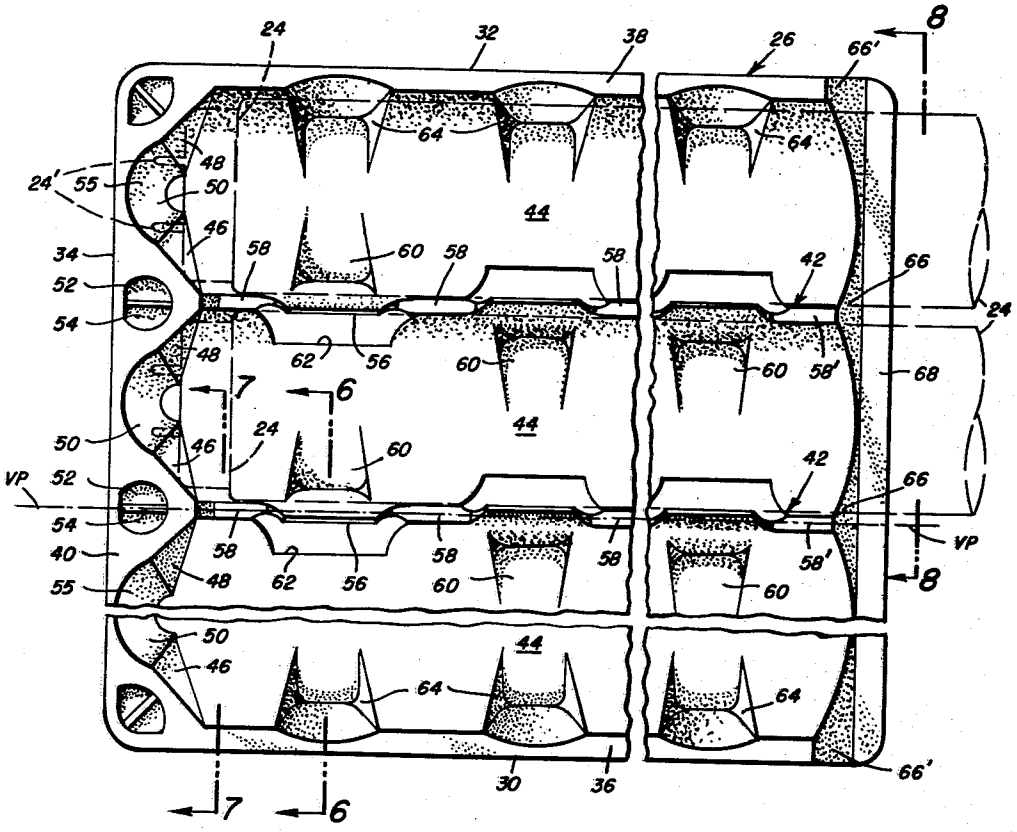

FIG. 6

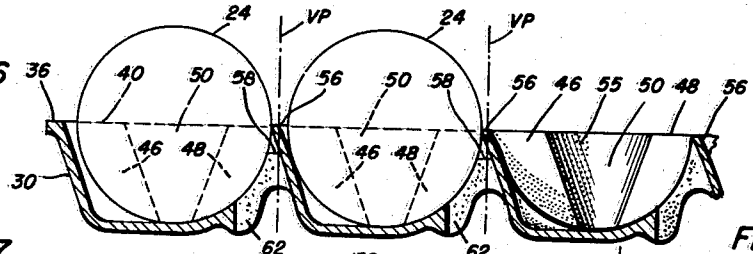

FIG. 7

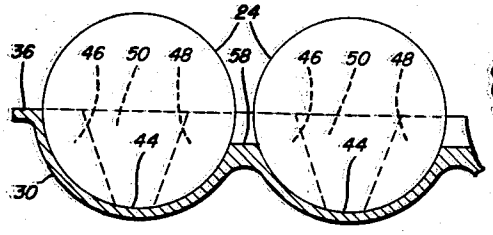

FIG. 8

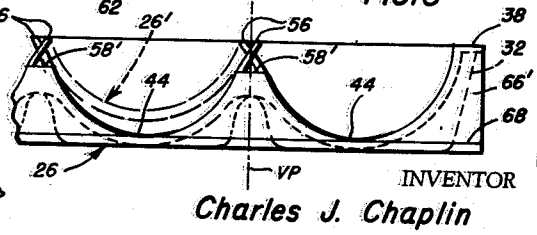

INVENTOR

Charles J. Chaplin

BY KARL W. FLOCKS

ATTORNEY

United States Patent Office 3,163,312
Patented Dec. 29, 1964

3,163,312

PACKING FOR FRAGILE ARTICLES

Charles J. Chaplin, Stamford, Conn., assignor to Diamond National Corporation, New York, N.Y., a corporation of Delaware

Filed June 29, 1962, Ser. No. 206,359
14 Claims. (Cl. 217—26.5)

This invention relates generally to a packing to be used within a conventional shipping case for protecting shipments of elongated articles, such as fluorescent light tubes or the like, against damage in transit, handling, etc., and a primary object is to provide an inexpensive, convenient packing unit or sheet, protecting a plurality of such articles in superimposed layers within the shipping case.

Another object of the subject invention is to provide packing units or sheets which permits the use of a relatively smaller volume packing case than was heretofore possible with similar packings of the prior art.

A further object of the present invention is to provide a novel packing permitting super-imposed layers of a relatively fragile elongated tubes to be readily packed and shipped, the packings preventing longitudinal and lateral shifting of the articles being protected and preventing engagement between superimposed and adjacent articles.

A still further object of the present invention is to provide a novel packing of the character involved wherein less material is required than the prior art, thus affording economies in cost of materials, packing and shipping space, accomplishing all of the functions without any loss of protection or advantages of the prior art.

The novel packing element and package formed by using the same involves the use of packing principles generally found to be conventional among long-distance movers and the like when packing fragile articles such as china, glassware, etc. These packers have found that the mere interpositioning of a sheet of newspaper between opposed chinaware of similar configuration, serves as adequate means for protecting and preventing breakage of these articles. It was found that it is not necessary that each article be separately packed or isolated one from the other, but rather that only a thin layer of relatively soft material need be utilized between these articles.

The novel packing units of the subject invention are generally produced from a pulp material, and the portions separating adjacent pockets for receiving the articles are constructed from substantially a single layer of material as compared with triangular separating portions of prior art packings which are of a relatively solid triangular cross-section. Further, the separators provided in the subject invention are of a relatively resilient, spring-like character as compared with the relatively rigid constructions provided in the prior art.

In the prior art, in order to form ribs or separators between the adjacent cells for the fragile articles, a two-sided separator rib was formed, and if an attempt was made to reduce the cross-section of these separators, it was found that the slurry of pulp would build over in these areas and cause the separators to be of a relatively solid character. Thus the separators of the prior art, have been generally constructed with a hollow triangular configuration and the base of the triangle was relatively wide thus causing a substantial unnecessary width to the overall separator sheet which accordingly required an increased width in the packing case in which the fragile articles would ultimately be packed, shipped and stored.

A still further object of the present invention is to provide a separator for relatively fragile articles that achieves the above objects, and that is also relatively easy to mold by known methods and on ordinary equipment.

Other objects in the nature and advantages of the instant invention will be apparent from the following description taken in conjunction with the accompanying drawings, wherein:

FIG. 1 is a side elevation of a package utilizing the novel separator sheets of the invention, portions being broken away for purposes of showing details, and an intermediate portion of the package being eliminated;

FIG. 2 is a vertical section taken substantially on the plane of line 2—2 of FIG. 1;

FIG. 3 is an enlarged fragmentary section taken substantially on the plane of line 3—3 of FIG. 1;

FIG. 4 is a vertical section taken substantially on the plane of line 4—4 of FIG. 3, a fragmentary portion of a fluorescent tube being shown by means of phantom lines;

FIG. 5 is a top plan view of one of the novel separator sheets, fragmentary portions of fluorescent tubes being shown by means of phantom lines, and intermediate portions of the sheet being eliminated;

FIG. 6 is a fragmentary vertical section taken substantially on the plane of line 6—6 of FIG. 5;

FIG. 7 is a fragmentary vertical section taken substantially on the plane of line 7—7 of FIG. 5; and

FIG. 8 is a fragmentary end elevation looking substantially from the plane of line 8—8 of FIG. 5, and showing the manner in which the spring-like or resilient separator portions between adjacent lines the manner in and showing by means of phantom lines the manner in which fragmentary portion of a second separator sheet would nest with that shown by means of solid lines.

Referring now in greater detail to the figures of the drawings wherein similar reference characters refer to similar parts, FIG. 1 illustrates a packing case indicated generally at 10 comprising a bottom wall 12, a pair of side walls 14 and 16, a pair of end walls 18 and 20, and a suitable lid 22. The packing case 10 may be produced from any suitable material such as wood, paperboard, etc., and specific details of the packing case are not of particular significance to the present invention except to the extent that a smaller dimensioned packing case can be utilized with the present invention than was possible by using prior art packing elements.

Within the case 10, there is arranged a series of superimposed layers of a plurality of fluorescent tubes 24. Each of the layers is disclosed as having 6 tubes per layer, the case comprising 18 tubes per case as is conventional, however, the number of layers may vary as will be readily apparent to those skilled in the art.

Each layer of tubes 24 is separated from the next adjacent layer by an arrangement of packing sheet elements indicated generally at 26, each of these sheet elements 26 being produced from pulp material and comprising a bottom wall 28, sidewalls 30 and 32, and a rear wall 34. Sidewalls 30 and 32 include at the upper margins thereof laterally reinforcing flanges 36 and 38, respectively, which are substantially coplanar with a marginal flange 40 at the upper edge of the rear wall 34.

Disposed in spaced relation between the side walls 30 and 32 and projecting substantially vertically from the bottom 28 of the packing sheet element 26 are a plurality of separator rib means indicated generally at 42 which form therebetween a plurality of substantially elongated articles received in pockets 44 which are opened at the end opposite the rear wall 34. The pockets 44 have a general semi-circular cross section to substantially conform to the under surface of the fluorescent tubes which will be supported therein. The end of the cells 44 adjacent the rear wall 34 are formed by means of a pair of triangular panel segments 46 and 48 connected to a semi-frustro pyramidal panel section 50. The segments 46–50 form between adjacent cells inwardly of the flange 40 of the rear wall a substantially scalloped portion which has circular indentations 52 therein having a reinforcing rib

54 substantially in alignment with a vertical plane VP passing through the separator rib means 42.

The fluorescent tubes 24 include a pair of spaced longitudinally extending contact pins 24' which will be disposed substantially within an indentation 55 communicating with cell 44 and formed by segments 46, 48 and 50 and clearly seen in FIG. 5.

The separator rib means 42 comprises a plurality of single-layer, substantially "springlike," separator elements or portions 56 which are longitudinally spaced along the plane VP of the respective separator means, and which extend from one cell 44 in intersecting relationship through and beyond the vertical plane between the one cell and the next adjacent cell as clearly seen in FIG. 6 and 8, for example. The separator elements 56 have formed therebetween relatively low saddle portions 58 which are of a relatively solid character due to the build up of the pulp slurry in the suction mold when the separator sheet element is being formed. Each of the separator elements 56 have formed substantially at the base thereof in the cell from which they project an embossment portion 60 which substantially reinforces the base of these separator elements, and the separator elements 56 are formed as a single layer element by blanking out an aperture 62 over which the separator elements extend in the next adjacent cell; see FIG. 5.

The side walls 30 and 32 have formed in space relation therealong embossment portions 64 which extend into the peripheral flanges 36 and 38 to substantially rigidify the side walls of the separator sheet element. The terminal ends of the separator means are comprised of relatively low saddle portions 58', having a substantially solid or triangular shape which is symmetrical with respect to the previous mentioned vertical plane VP, and forming triangular reinforcing segments 66 and the ends of the separator means 42. Extending transversely at the end of the separator sheet element 26 opposite the vertical wall 34 is a reinforcing flange 68 which is disposed below the lower surface of cells 44. It will be noted that the terminal ends of the side walls 30 and 32 comprise substantially triangular segments 66'.

In addition to using less material to produce each separator sheet element 26 by means of the apertures 62 which permit the formation of the single layer separator elements 56, the apertures 62 permit ready nesting of the separator sheet elements as indicated in 26 and 26' in FIG. 8.

The substantially "spring-like" elements 56 will engage intermediate side portions of the fluorescent tubes, for example, in FIGS. 2 and 6, and alternate pairs of the separator elements 56 will engage the fluorescent tube disposed in two adjacent receiving cells 44. In view of the fact that the draft i.e. clearances to removal from molds, of the separator rib means 42 is not critical, and the separator elements 56 are formed of a single layer, the cells 44 are disposed relatively close to each other and the overall width of the separator sheet element is substantially reduced as compared with that of the prior art which was previously required for the same number of comparable dimensioned fluorescent tubes 24.

In view of the reduction of the overall width of the separator sheet, the separator sheet elements together with the separator tubes afford a novel package which is of a smaller overall dimension and of less weight than that which was required in the prior art for fluorescent tubes of the same dimensions, the reduction of packing element dimension reduced the volume of packing case affording material savings in shipping and storage space.

It will be obvious to those skilled in the art that various changes may be made without departing from the scope of the invention and therefore the invention is not limited to what is shown in the drawings and described in the specification but only as indicated in the appended claims.

What is claimed is:

1. A unitary packing of molded pulp material for separating and protecting the ends of a plurality of elongated fragile articles comprising a sheet having a plurality of elongated, article-receiving pockets having a top margin; the improvement comprising separator rib means disposed between and adjacent elongated article-receiving pockets, said separator means including an elongated saddle portion disposed below said top margin and a plurality of longitudinally spaced elements projecting from one side of a vertical plane extending through said saddle portion; and intersecting said vertical plane below said top margin and terminating above said saddle portion.

2. The structure set forth in claim 1 wherein said longitudinally spaced elements project alternately from opposite sides of said vertical plane.

3. The structure as set forth in claim 1 wherein said sheet comprises a pair of side walls and a back wall integral with said elongated, article-receiving pockets.

4. The structure of claim 3 wherein said pockets are opened at the ends opposite said back wall, said sheet including a lateral lip extending between said side walls and disposed in the plane below the open end of said pockets.

5. A unitary packing of molded pulp material for separating and protecting the ends of a plurality of elongated fragile articles comprising a sheet having a plurality of elongated, article-receiving pockets, the improvement comprising separator rib means disposed between and adjacent elongated article-receiving pockets, said separator means including a plurality of longitudinally spaced elements projecting from one side of a vertical plane and extending through said vertical plane, said spaced elements comprising a single layer of pulp material and being substantially "spring-like."

6. A unitary packing of molded pulp material for separating and protecting the ends of a plurality of elongated fragile articles comprising a sheet having a plurality of elongated, article-receiving pockets, the improvement comprising separator rib means disposed between and adjacent elongated article-receiving pockets, said separator means including a plurality of longitudinally spaced elements projecting from one side of a vertical plane and extending through said vertical plane, said sheet including a plurality of apertures underlying each of said longitudinally spaced elements.

7. A unitary packing of molded pulp material for separating and protecting the ends of a plurality of elongated fragile articles comprising a sheet having a plurality of elongated, article-receiving pockets, the improvement comprising separator rib means disposed between and adjacent elongated article-receiving pockets, said separator means including a plurality of longitudinally spaced elements projecting from one side of a vertical plane and extending through said vertical plane, said pockets having a substantially arcuate cross-section for substantially conforming to a similarly conformed portion of the articles being protected.

8. A unitary packing of molded pulp material for separating and protecting the ends of a plurality of elongated fragile articles comprising a sheet having a plurality of elongated, article-receiving pockets, the improvement comprising separator rib means disposed between and adjacent elongated article-receiving pockets, said separator means including a plurality of longitudinally spaced elements projecting from one side of a vertical plane and extending through said vertical plane, said sheet including relatively low, rigid saddle portions disposed between adjacent separator elements.

9. The structure of claim 8 wherein said saddle portions are disposed substantially symmetrical about said vertical plane and are relatively rigid as compared with said separator elements.

10. The structure of claim 8 wherein said separator elements include an embossed portion at the base thereof in the pocket from which they project.

11. A shipping package comprising a case and a plu-

rality of layers of fragile articles, each layer comprising at least a pair of molded pulp packing sheets supporting said elongated articles, said packing sheets of each layer being disposed at opposite ends of said case, said sheets including a plurality of substantially parallel, elongated, article-receiving pockets having a top margin and opening toward each other and containing opposite ends of said fragile articles, each of said sheets including a separator rib means between adjacent pockets, said separator rib means including elongated saddle portions disposed below said top margin and; a plurality of longitudinally spaced elements projecting from one side of a vertical plane extending through said saddle portion and intersecting; said vertical plane and terminating adjacent said top margin and terminally engaged with the fragile articles toward which the elements project.

12. The structure set forth in claim 11 wherein said packing sheets include side and back walls engaged with inner surface wall portions of said case, said back walls including a recess portion, said fragile articles including terminal connectors disposed in said recess.

13. The structure of claim 11 wherein said spaced elements comprise a single layer of pulp material and are substantially "spring-like."

14. A pair of unitary, nested packings of molded pulp, each packing comprising a sheet having a plurality of elongated, article-receiving pockets having a top margin, the improvement comprising separator rib means disposed between and adjacent elongated article-receiving pockets, said separator rib means including an elongated saddle portion disposed below said top margin and a plurality of longitudinally spaced elements projecting from one side of a vertical plane extending through said saddle portion and intersecting said vertical plane and terminating above said saddle portion, said saddle portions including a plurality of apertures underlying each of said longitudinally spaced elements and receiving the spaced elements of the nested packing therein.

References Cited in the file of this patent

UNITED STATES PATENTS

2,564,729 Shepard ..... Aug. 21, 1951

FOREIGN PATENTS

521,271 Belgium ..... Jan. 7, 1954