United States Patent

Johnson, II

[15] **3,687,255**

[45] **Aug. 29, 1972**

[54] **MULTI-PRICE, MULTI-CHANNEL COIN CONTROL MEANS**

[72] Inventor: **Stanley G. Johnson, II,** Kirkwood, Mo.

[73] Assignee: **H. R. Electronics Company,** High Ridge, Mo.

[22] Filed: **April 16, 1970**

[21] Appl. No.: **29,025**

[52] **U.S. Cl.** .....**194/1 N,** 194/10

[51] **Int. Cl.** **G07f 11/00**

[58] **Field of Search**.....194/1 M, 1 N, 10, DIG. 14

[56] **References Cited**

UNITED STATES PATENTS

3,508,636	4/1970	Shirley	194/10
3,482,670	12/1969	Yamashita	194/10
3,532,203	10/1970	Clift	194/10
3,428,157	2/1969	Patterson	194/2
3,367,467	2/1968	Ptacek	194/10 X

Primary Examiner—Robert B. Reeves
Assistant Examiner—Thomas E. Kocovsky
Attorney—Charles B. Haverstock

[57] **ABSTRACT**

Electronic control means for vending machines and other coin control devices which accept different denomination coins, are capable of making at least two different vends at preselected prices and perform other functions including change making, said control means including adding, subtracting and memory means, and means under the control thereof for producing vending, change making and other functions. The subject means are preferably constructed using solid state components and may also include anti-cheat and/or anti-malfunction devices to prevent the vending of articles unless a proper amount of money has been deposited.

20 Claims, 5 Drawing Figures

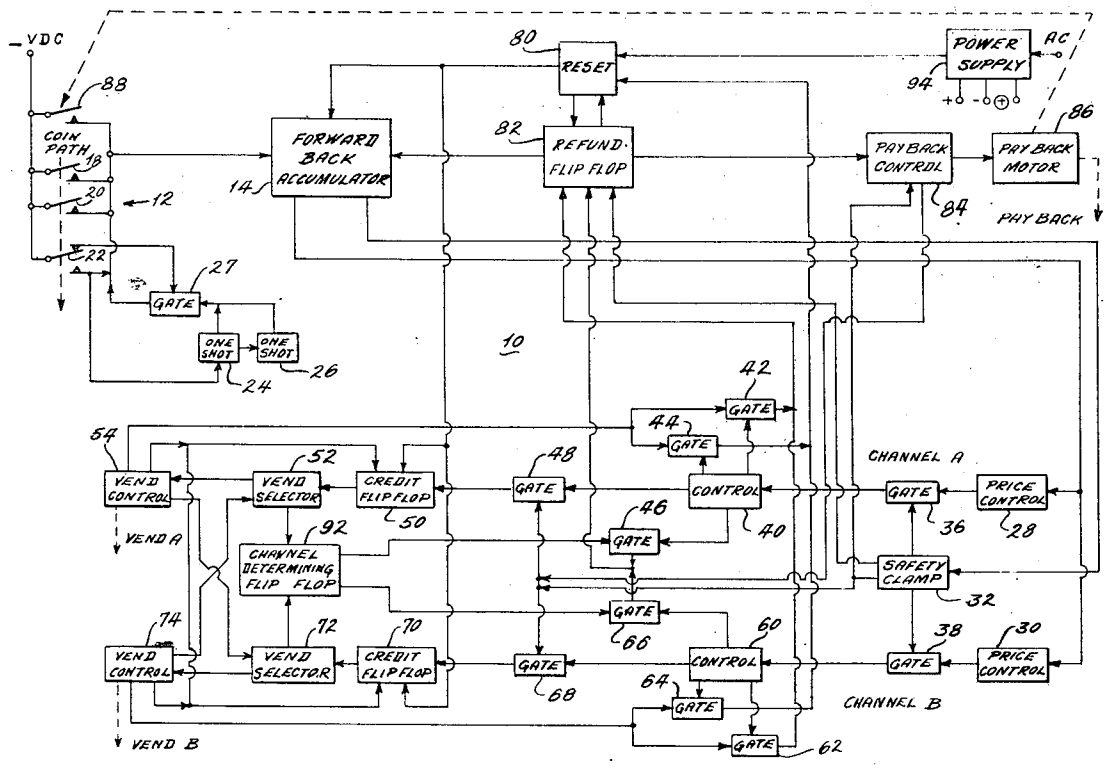

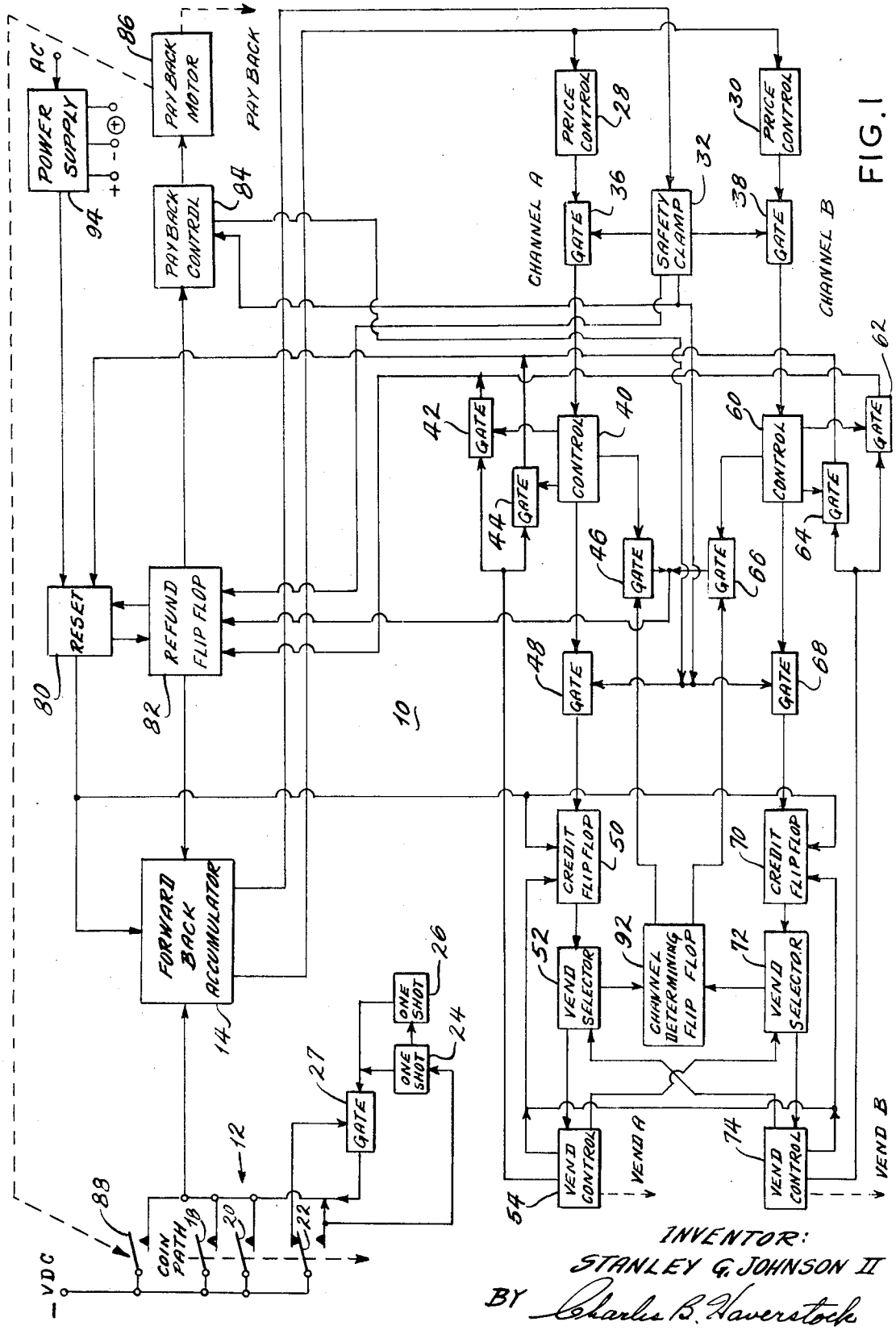

FIG. 1

INVENTOR:
STANLEY G. JOHNSON II
BY Charles B. Haverstock
ATTORNEY.

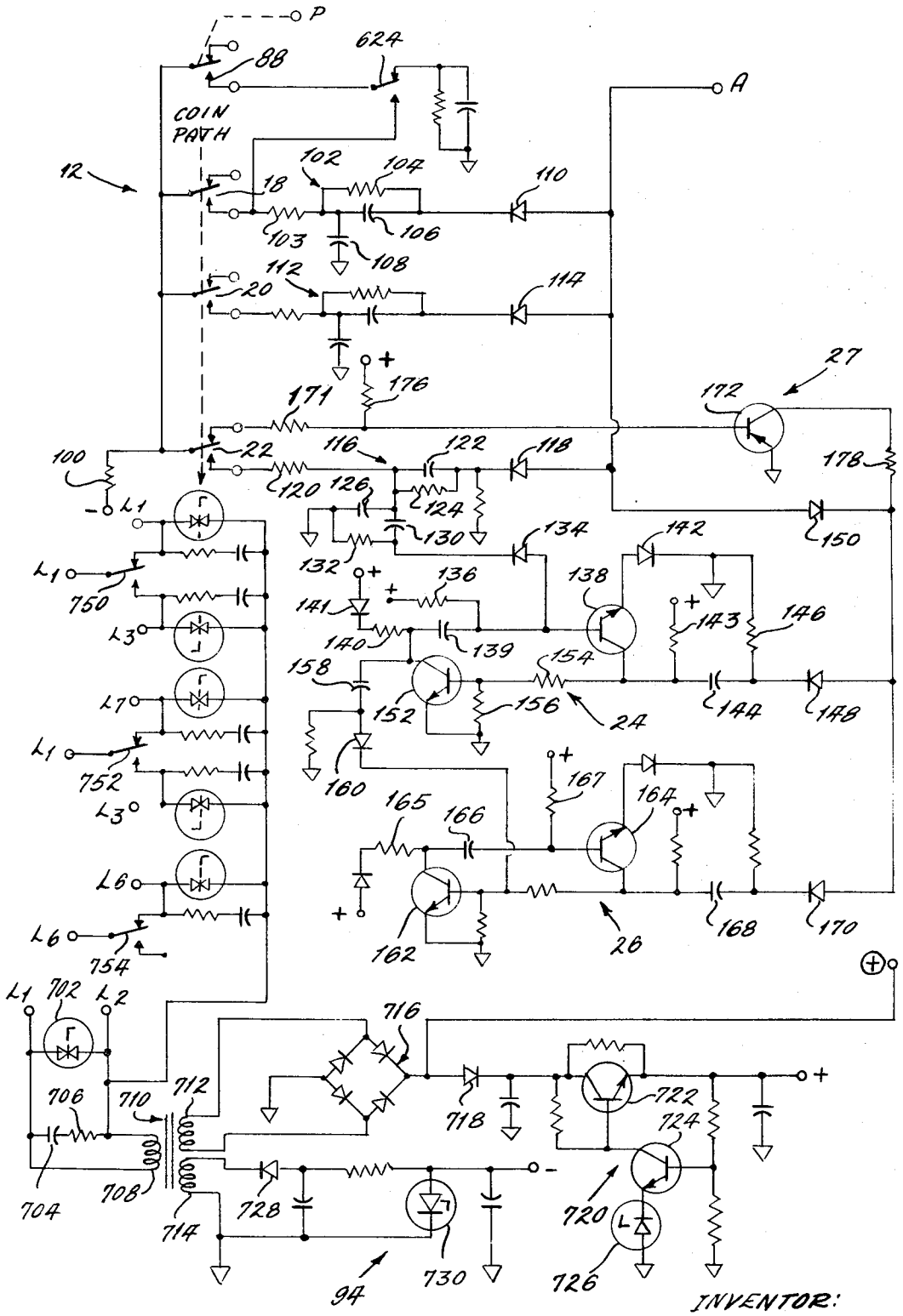

FIG. 2

INVENTOR:
STANLEY G. JOHNSON II
BY Charles B. Vanderstock,
ATTORNEY.

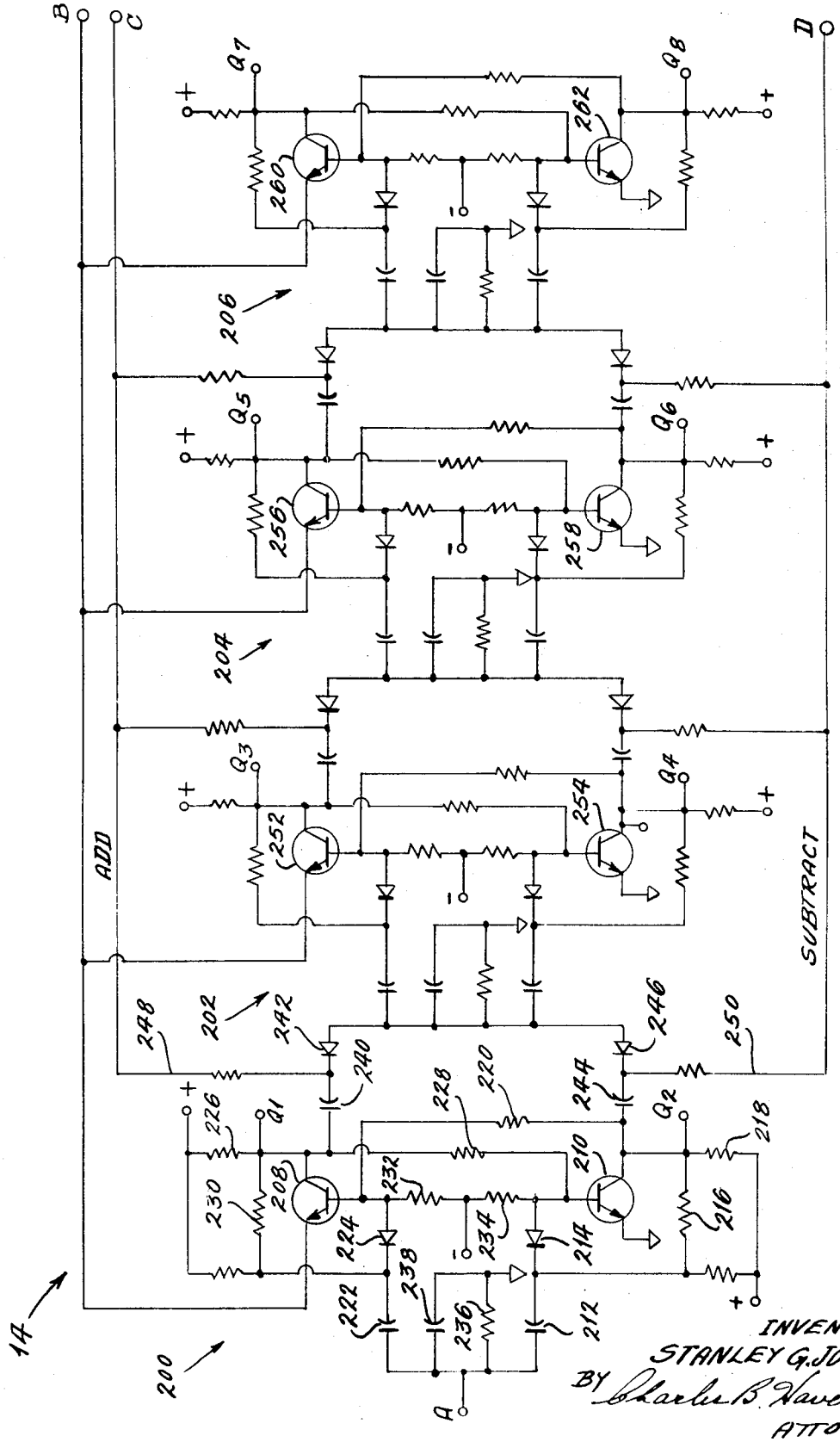

FIG. 3

INVENTOR:
STANLEY G. JOHNSON II
BY Charles B. Haverstock
ATTORNEY.

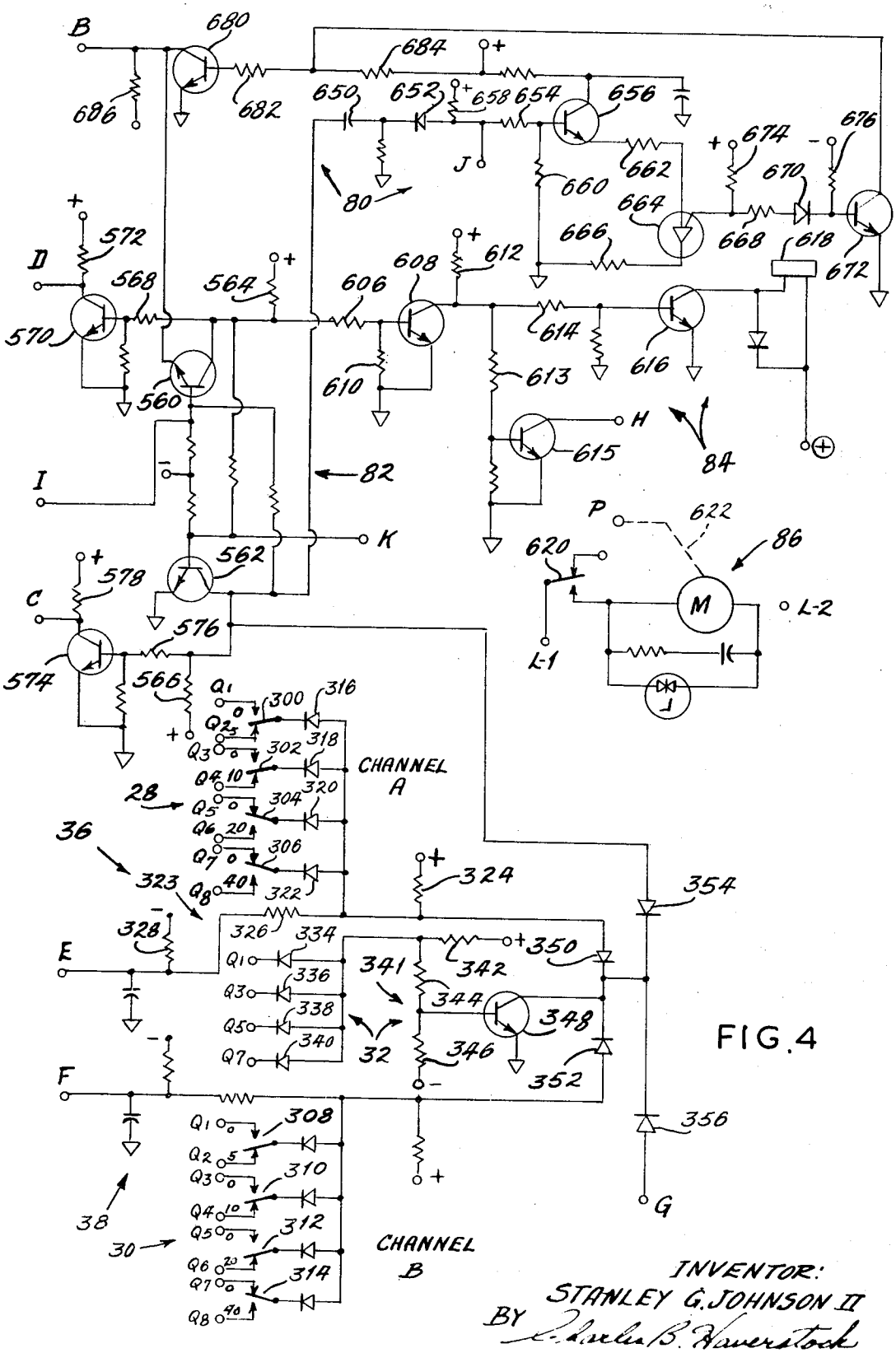

FIG. 4

INVENTOR:
STANLEY G. JOHNSON II
BY Charles B. Haverstock
ATTORNEY.

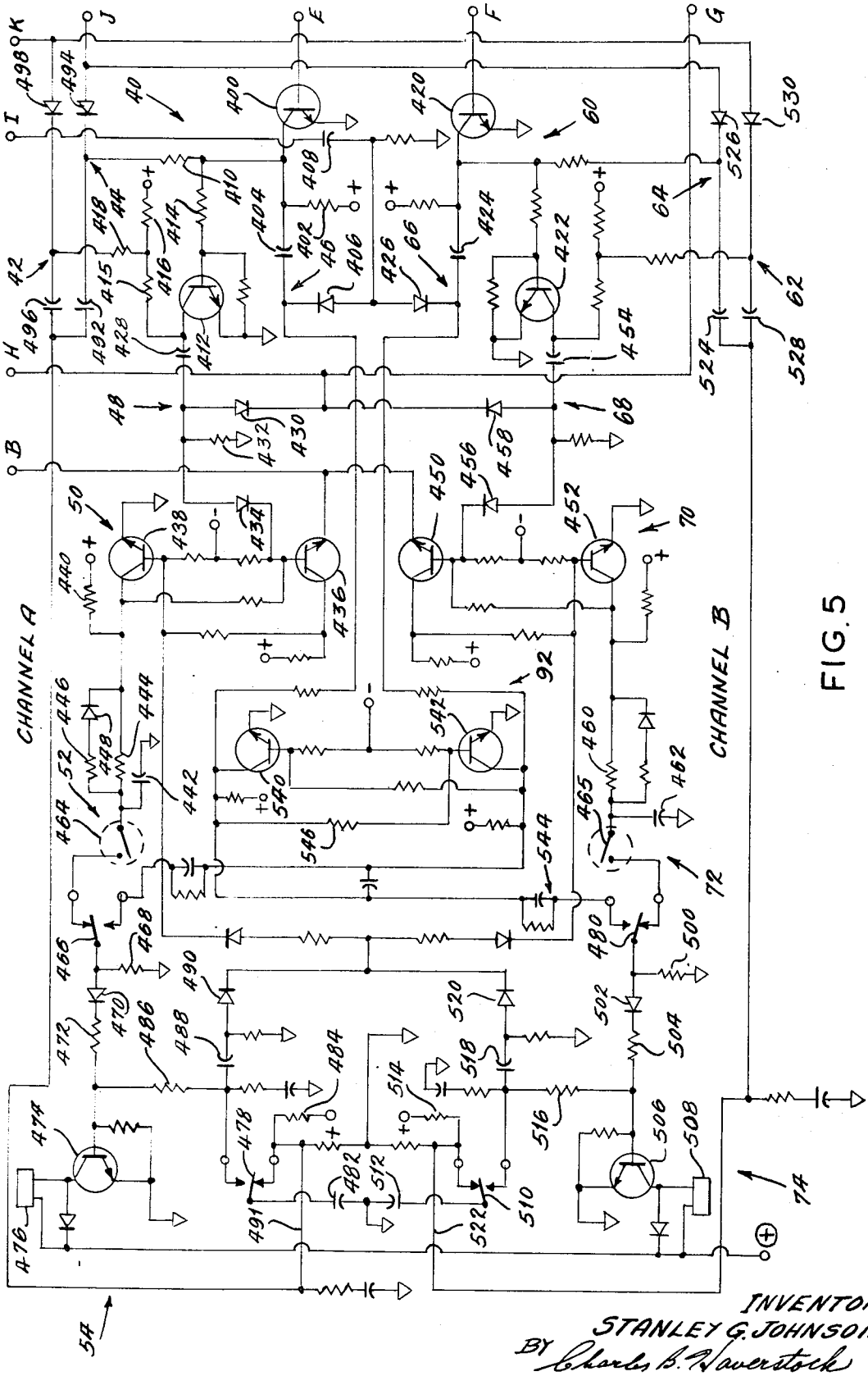
CHANNEL A
CHANNEL B
INVENTOR:
STANLEY G. JOHNSON II
BY Charles B. Waverstock
ATTORNEY.

FIG. 5

MULTI-PRICE, MULTI-CHANNEL COIN CONTROL MEANS

Many electronic coin operated devices are in existence including some which perform vending, change making and other functions and combinations thereof. For the most part, however, the known electronic coin operated devices are limited in their versatility and are constructed for specific limited applications such as applications where the price of the vend is relatively fixed. Also, the previously known electronic coin operated devices are usually able to only make vends at a single price and are not adaptable to applications where the customer may select between two or more vends which may have differing prices. Also, since vending machines may be used to vend various different articles, the values of which may change from time to time, it is highly desirable that the price of the vend be easily adjustable over a wide range by the owner or operator of the machine. In the previous vending devices a change in vend price has been relatively difficult to make requiring either a substitution of coin control units or the extensive rewiring of the existing coin control unit.

Electronic control means for vending machines such, for example, the control means described in Shirley U.S. Pat. No. 3,307,671, dated Mar. 7, 1967, and in copending Shirley U.S. application Ser. No. 708,140, filed Feb. 26, 1968, both of which are assigned to applicant's assignee, have solved some of the above mentioned problems and have overcome some of the disadvantages and shortcomings of the prior art. The means disclosed herein represent still further improvements and expanded versatility in such control means.

The present invention teaches the construction and operation of a novel, versatile and flexible electronic control circuit which utilizes accumulator means which not only can add or accumulate but also can subtract or count backwards. The present circuit is particularly well suited for use on vending machines which accumulate amounts deposited, allow for the selection of one of various vends at the same or at different prices, control the vending, make change appropriate to the price of the vend selected and perform the other functions of the vending machine. The present invention increases the versatility and utility of such vending machines by allowing them to be used for vending various types of merchandise at various preselected prices, which prices may be changed from time to time in accordance with market conditions and otherwise. The present invention also reduces the possibility of a customer being able to cheat the vending machine by providing means which prevent false signals from causing the circuits to malfunction such as false signals that might be caused by a customer repeatedly interrupting the external power to the circuit by jiggling the power cord or pushing more than one vend selector button or switch at a time.

The subject device includes a control circuit which comprises means responsive to the deposit of coins of different denominations into a coin receiving unit, means for accumulating or counting the value of the coins deposited, means for determining when the value of coins deposited equals one of the vend prices, means for adjusting the vend prices as desired, means for allowing the vending of an item when the price thereof has been deposited, and means for causing a refunding

operation when necessary. The present circuit also includes vend control means, refund control means and reset means as well as anti-cheat means. The subject circuit is preferably constructed employing solid state components to minimize its size, improve its reliability, reduce its maintenance and repair requirements and to enable it to be constructed and packaged as a relatively compact, preferably plug-in type unit which can easily and quickly be installed and/or removed and replaced in a vending or like machine. Being constructed insofar as possible of solid state components also makes the circuit relatively troublefree and easy to handle and maintain.

A principal object of the present invention therefore is to provide improved and more versatile means for controlling, vending, refunding and other operations of coin controlled devices.

Another object is to enlarge the functions and operations performed by vending and other like devices.

Another object is to provide improved means for accumulating the value of monies deposited in vending machines, which means are also used to determine and control the payback of money deposited in excess of the vend price.

Another object is to protect vending machines from unscrupulous persons by preventing false signals from causing malfunctions.

Another object is to provide improved means for determining amounts deposited in vending machines including amounts deposited in excess of the price of a selected vend and for determining and controlling the refunding of such excess amounts.

Another object is to provide improved electronic control means which can be installed as original equipment or added as an improvement to an existing vending machine with a minimum of machine modification.

Another object is to provide a packaged plug-in type control unit for quick and easy installation in vending machines and the like, especially vending machines which vend more than one kind and/or price of article, which articles and prices may be varied from time to time.

Another object is to minimize maintenance and downtime of a vending machine and the like.

These and other objects and advantages of the present invention will become apparent after considering the following detailed specification which covers a preferred embodiment thereof in conjunction with the accompanying drawings, wherein:

FIG. 1 is a block diagram of a control circuit constructed according to the present invention; and,

FIGS. 2, 3, 4, and 5 together constitute a schematic circuit diagram showing the details of a particular embodiment of the control circuit of FIG. 1.

Referring to the drawings more particularly by reference numbers, number 10 in FIG. 1 refers generally to a control circuit constructed according to the present invention. The circuit 10 is constructed to control the various operations of vending machines and other money or coin control devices, and in particular those machines capable of vending more than one different kind of item at different costs, which costs can be selected by the one servicing the machine and not ordinarily by the customer. The present control means can also be used on those machines capable of refund-

ing amounts deposited in excess of the cost of a selected item. The circuit **10** operates in conjunction with and receives input signals from a coin unit **12** on the vending machine. The input signals produced in the coin unit **12** when coins are deposited therein are fed to an accumulator **14** identified in the drawing by the legend Forward-Back Accumulator which responds to the input signals it receives by accumulating therein an amount equal to the money value of the coins deposited. When the amount accumulated in the accumulator **14** equals or exceeds the price of the article selected, the subject circuit **10** will be conditioned to cause several different things to happen including the energizing of means to enable the customer to initiate a vend. The total amount of the monies deposited in the machine is accumulated in the accumulator **14** and upon initiation of a vend operation by the customer, actuating selection means to be described later, are set in motion which cause the vend to be made, the refunding of amounts accumulated in the accumulator **14** above the selected vend price, the resetting of the circuit **10** to some preestablished reset condition in readiness for the next vend operation, and the performing of other control functions as will be explained.

Several different types of forward-back accumulator means can be used for the accumulator **14** as will be described even though for purposes of this specification a particular preferred form will be described in detail. It is also preferred to construct the accumulator **14** as well as the other parts of the circuit **10** utilizing as far as possible solid state components for reliability and dependability, to minimize the size, weight, and bulkiness thereof, and to make the circuit as troublefree as possible. The size and bulk limitations are particularly important considerations in plug-in type controls especially where they are to be used in machines where there is relatively little available space. Also, the less space used for the controls in a vending machine the more space will be available for other things including particularly the products to be vended.

The subject circuit **10** is designed to be used in conjunction with the coin receiving unit **12** of a vending machine as aforesaid, and the coin receiving unit **12** shown in FIG. **1** is shown in a simplified schematic form having provisions for receiving deposits of nickels, dimes and quarters into a coin path. The unit **12** has a nickel switch **18**, a dime switch **20**, and a quarter switch **22**. The nickel switch **18** is constructed and positioned in the coin path to have its normally open contacts close once for the deposit of each nickel, dime or quarter, and to reopen its contacts as soon as the coin has passed out of engagement therewith. The dime switch **20** is constructed and positioned to have its normally open contacts close once for the deposit of each dime and each quarter, and to reopen when the coin has passed. The normally open contacts of the quarter switch **22** are constructed and positioned to close once only for the deposit of each quarter, and to reopen after the quarter has passed or moved out of contact therewith. The quarter switch **22** also has normally closed contacts which open and then reclose as the quarter passes therethrough. Coin units **12** having these general characteristics are known and available commercially.

The normally open contacts of the nickel, dime and quarter switches **18**, **20** and **22**, respectively, are shown connected between an input voltage source labeled −VDC and the input side of the accumulator **14** so that the accumulator **14** receives an input impulse whenever the normally open contacts of any one of the switches **18**, **20** and **22** close. This means that a separate input impulse is sent to the accumulator **14** each time a coin moves past and operates one of the switches **18**, **20** and **22**. In addition, the output side of the normally open contacts of the quarter switch **22** are connected to a pair of serially connected one-shot multi-vibrator circuits **24** and **26** whose outputs are connected through a gate **27** to the input of the accumulator **14**. This means that whenever the normally open contacts of the quarter switch **22** close an input impulse will be sent not only to the accumulator **14** but also to the first one-shot multi-vibrator **24** as well. This input impulse causes the multi-vibrator circuit **24** both to produce a second impulse and to energize the second one-shot multi-vibrator circuit **26** to produce a third impulse. The second and third impulses which are the outputs of the one-shot multi-vibrators **24** and **26** pass through the gate **27** to the accumulator **14** as aforesaid so that when a quarter is deposited in the coin unit **12** a total of five input impulses will be produced as follows, one from the nickel switch **18**, one from the dime switch **20**, one from the quarter switch **22** and two from the one-shots **24** and **26**. Each of these five impulses represents the deposit of a nickel in the present embodiment although they could represent any other value of coin which is the lowest value coin acceptable by the coin unit **12**.

The gate **27** also includes a control connection from the normally closed contacts of the quarter switch **22**. When the normally closed quarter switch contacts are closed, which indicates that a quarter is not moving past the quarter coin switch **22**, a control signal is sent from the switch **22** to the gate **27** which causes the gate **27** to block any impulse that might be produced if the one-shot multi-vibrators **24** and **26** are undesirably triggered such as by a transient or other stray signal in the circuit **10**.

The accumulator **14** has two output connections, the first of which feeds information as to the count in the accumulator to price control means **28** and **30** which respectively are located in different vend channels labeled Channel A and Channel B in FIG. **1**. Each of the price control means **28** and **30** include means to establish the acceptable vend price and means to produce an output therefrom only when the state of the accumulator **14** represents a value which is exactly the same as the vend price established therein.

The second output connection from the accumulator **14** is connected to a safety clamp circuit **32**. The safety clamp **32** is connected to sense when the accumulator **14** is in a zero or reset condition and it includes means to produce signals for various control functions throughout the circuit **10**. For example, the outputs of the price control means **28** and **30** are connected through gates **36** and **38**, respectively, which gates also include input connections from the safety clamp **32**. When the safety clamp **32** is sensing a zero or reset condition of the accumulator **14**, it causes the gates **36** and **38** to go into conditions where signals from the price

control means **28** and **30** are blocked and therefore not conducted further. This is required since in some arrangements it is possible to establish the price control means **28** and/or **30** to a zero price or in other words to a condition which would cause an output from the price control means when the accumulator **14** is in its zero or reset condition, an obviously undesirable result. Having the price control means **28** and/or **30** set to a zero price condition, of course, would only occur through an error by a service man in establishing the vend prices, and therefore the safety clamp **32** and the gates **36** and **38** prevent outputs from the price controls **28** and **30** only if they are improperly set.

The price control means **28** and the gate **36** are both in the Channel A. When the exact price other than zero established by the price control **28** has been accumulated in the accumulator **14**, the price control **28** will produce an output which passes through the gate **36** to a control circuit **40**. The control circuit **40** has four output connections, two of which are connected to control gates **42** and **44**, the functions of which will be discussed hereinafter, the third output being connected to another gate **46** whose function will also be discussed hereinafter, and the fourth output of the circuit **40** is connected to still another gate **48**. The control circuit **40** produces an output signal to the gate **48** whenever it receives an input signal from the price control means **28**. The gate **48** is also controlled in part by the output of the safety clamp **32** which closes the gate **48** under certain predetermined conditions including when the accumulator **14** is at a zero count. The gate **48** is normally open, however, and it passes the output signals it receives from the control circuit **40** to a credit flip-flop **50**, which signals change the state thereof from a no-credit or reset condition to a credit condition. The credit flip-flop **50** when in its credit condition causes vend selector means **52** to be in an enabled condition so that the customer can energize a portion thereof to send a signal to vend control means **54** which in turn produce a vend at the "Vend A" output in FIG. **1**.

Channel B has components that correspond to the components of Channel A including a control circuit **60**, which corresponds to the control circuit **40** and which has its input side connected to the output side of the price control **30** through gate **38**. The control circuit **60** has outputs connected to gates **62**, **64**, **66** and **68** which correspond respectively, to gates **42**, **44**, **46** and **48** in Channel A. The control circuit **60** when energized by a signal from the price control **30** passes a signal through the gate **68** to a second credit flip-flop **70** which corresponds to the credit flip-flop **50** in Channel A. The credit flip-flop **70** is connected to another vend selector means **72** which when enabled by the changing of the credit flip-flop **70** from a no-credit to a credit condition allows the customer to energize second vend control means **74** to produce a vend at the output labeled "Vend B" in FIG. **1**.

The vend control means **54** and **74** each include an output that is connected to the vend selector means **72** and **52**, respectively, associated with the other circuit channel. When one of the vend control means are energized by a customer selection, a signal is sent therefrom on the output connection to the vend selector means in the opposite channel to disable the opposite channel vend selector so that the customer cannot cheat the machine by inducing vends out of both channels simultaneously. The vend control means **54** and **74** also include outputs connected to both of the credit flip-flops **50** and **70** to revert to or remain in their no-credit states so that an actuation of either of the vend selector means **52** or **72** thereafter will not produce a second vend.

The vend control means **54** and **74** also include delayed control outputs connected to the gates **42** and **44** in case of vend control means **54** in Channel A and to the gates **62** and **64** in the case of vend control means **74** in Channel B. When either of the vend control means **54** or **74** is deenergized after a vend, a delayed output signal is fed therefrom to the respectively connected gates, and this output signal is passed through one of the gates, depending upon their states. The states of the gates in turn depend on the state of the associated control circuit **40** or **60**. The signal is delayed to assure that all deposited coins clear the coin unit **12** before a reset or refund operation is commenced, since otherwise it might be possible to lose money in the machine.

If for instance the exact price set in price control **28** is accumulated in the accumulator **14** so that the price control **28** is producing an output signal to the control circuit **40**, the gate **42** will be in its closed condition while the gate **44** will be in an open condition, and therefore the output signal from the vend control means **54**, upon deenergization thereof after the production of "Vend A," will pass through gate **44** to energize reset means **80** which in turn produce a reset signal which returns the accumulator **14** to its zero or reset condition. The reset signal fed to the accumulator **14** from the reset means **80** is also fed to both credit flip-flops **50** and **70** to assure that they have returned to their no-credit or reset conditions.

If the accumulator **14** accumulates an amount greater than the amount set in the price control **28**, thereafter when the "Vend A" selection is made in Channel A, the control circuit **40** will be in its normal state since it will be receiving no signal from the control **28**, in which case the gate **42** will be in an open condition and the gate **44** will be in a closed condition. This causes the delayed output signal from the vend control means **54** to be blocked by the gate **44** but passed by the gate **42**. The gate **42** is connected to conduct the delayed output signal to a refund flip-flop **82**, instead of to the reset means **80**, to change the state thereof from a reset to a set or refund condition.

When the refund flip-flop **82** changes from its reset to its set condition, it produces an output to the accumulator **14** which causes the accumulator **14** thereafter to subtract rather than add future input impulses fed thereto. The refund flip-flop **82** when in a set condition also produces an output to a payback control **84** which in turn energizes the payback motor **86** to operate to refund a coin of the lowest denomination acceptable in the machine which in the circuit described is a nickel. The payback motor **86** with the payback of each coin cycles a payback switch **88** to momentarily close its normally open contacts. The payback switch **88** is connected between the source labeled −VDC, which is the same source that is connected to the coin switches **18**, **20** and **22**, and the accumulator **14**. When the contacts of the payback switch **88** close, an input impulse is sent

to the accumulator **14** in a manner similar to the way the input impulses are sent thereto by the coin switches **18**, **20** and **22**. Since the accumulator **14** is in its subtract rather than its add mode, however, due to the signal received thereat from the refund flip-flop **82**, the accumulator **14** reduces its count by an amount representative of one nickel each time a nickel is refunded. The payback motor **86** will continue to refund nickels until the count in the accumulator **14** is reduced to the exact price set in the price control **28** or **30** in the channel in which the vend was initiated. When the correct amount has been refunded the accumulator **14** will be in a proper condition so that the price control **28** or **30** in the selected vending channel produces an output to its associated control circuit **40** or **60** to energize the same. For example, if the vend was made out of Channel A, the control circuit **40** will then cause an output signal to be sent through gate **46** to the refund flip-flop **82** resetting it to its reset condition which ceases the operation of the payback control **84** and the payback motor **86**. The payback control **84** includes a control output which is connected to control the gates **48** and **68** to prevent the last mentioned output signals from the control circuit **40** or **60** from passing to the associated credit flip-flop **50** or **70** when the payback control **84** is energized. Otherwise the gates **48** and **68** would pass output signals produced by the control circuits **40** and **60** to the associated credit flip-flops to reestablish a credit condition thereof which of course is undesirable.

The circuit **10** also includes a channel determining flip-flop **92** which controls which of the gates **46** or **66** is open so that it can pass the output signal from the connected control circuit **40** or **60** to reset the refund flip-flop **82** when the count of the accumulator **14** has been reduced to the vend price established in the associated price control circuit. The channel determining flip-flop **92** is connected to receive outputs of the vend selector means **52** and **72** caused when the vend selector is disabled by a vend in the opposite channel. When either one is disabled by the opposite vend control, the channel determining flip-flop **92** is maintained or switched to a state which is indicative of which channel, Channel A or Channel B, was the last to produce a vend. The channel determining flip-flop **92** has two control outputs which are connected respectively to the gates **46** and **66** to cause the associated gate in the last activated channel to be open or in a signal passing condition while simultaneously closing the other of said gates. In the case of a Channel A vend, the channel determining flip-flop **92** causes the gate **46** to be in a conducting condition and the gate **66** to be in a non-conducting condition so that if during a refund operation both control circuits **40** and **60** produce reset signals due to the prices in the respective channels being met, only the reset signal from control circuit **40** is able to be passed to the refund flip-flop **82** to reset it and thereby to cease the payback operation. The gate **46** or **66**, of course, may pass a reset signal to the refund flip-flop **82** when the control circuit **40** or **60** is first energized before a vend selection has been made. Since at this time the refund flip-flop is reset anyhow, the signal through the gate **46** or **66** has no effect.

When the proper monies have been paid back and the vend has been made, the forward-back accumulator **14** and both credit flip-flops **50** and **70** if need be, are reset by the reset means **80** which are energized either by the aforementioned signal from one of the vend control means **54** or **74** through gate **44** or **64** respectively or by a signal from the refund flip-flop **82** which signal is sent when the refund flip-flop **82** is reset from its set to its reset condition. The circuit **10** is thereafter ready to accept more coinage for another vend.

It should be understood that the components of Channels A and B operate in a similar manner and even though one is picked in the examples, the other would also operate in the same way if selected. In this regard, either channel may be set so its price is higher, lower or the same as the other and the circuit **10** will still operate properly.

Also forming a part of the circuit **10** is a power supply **94** for supplying the proper voltages to the circuit **10** by means of the terminals shown. The power supply **94** is also connected to the reset means **80**. This connection is required since electronic counters and flip-flops when initially turned on must be driven to a predetermined condition or they will tend to come on in random conditions, which is undesirable. The reset means **80** includes voltage sensing means which sense when the power supply **94** has reached a certain level after being turned on. When the voltage level is reached a reset operation is commenced which in turn resets or assures that the accumulator **14**, the refund flip-flop **82** and the credit flip-flops **50** and **70** are in the desired initial conditions. The voltage sensing means in the reset means **80** are also included as an anti-cheat feature so that customers will not be able to confuse the circuit **10** by interrupting the power supply thereto in the hopes that the accumulator **14**, the credit flip-flops **50** and **70** and/or the refund flip-flop **82** will come on in some condition other than a zero or reset condition which might allow a vend and/or a refund after the insertion of little or no money. The power supply **94** itself may be of a well known construction and is shown connected to an A.C. source. The relays and other operating components of the vending machines on which the subject control means are installed are not part of this invention and for the most part are also of known constructions.

FIGS. **2**, **3**, **4** and **5** together are a schematic diagram showing the details of the circuit including the circuit connections and the circuit elements employed in the circuit **10**. The circuit **10** is for use in a vending or like machine that has a coin unit **12** capable of accepting nickels, dimes and quarters. The circuit as shown is arbitrarily connected to be used to vend items costing up to 75 cents in nickel increments. It will become apparent, however, that with slight modification, the coin unit may be made to accept other coin denominations including foreign and token coinage, and the circuit can also be made to control vends costing larger amounts and in different increment amounts as well. Furthermore, the circuit as shown is a dual channel device that is for use in vending machines which sell at least two different items and at vend prices which may also be different. The circuit **10** can also be modified according to the teachings of the present invention to have more or fewer channels as desired. The coins acceptable, the vend prices, and the number of channels

used in the examples which follow are chosen to circuit but obviously are not limiting factors. The elements and connections of the circuit portion shown in FIGS. 2, 3, 4, and 5 wherever possible are identified by the same numbers as used in FIG. 1. Also the lettered terminals of FIGS. 2, 3, 4, and 5 do not necessarily actually appear in circuit 10 and are included primarily for convenience in following the circuit 10 from one drawing to another.

INPUT SECTION

The coin switches 18, 20 and 22 as shown in FIG. 2 are located in the coin unit 12 as aforesaid, and are actuated or closed by movements of coins thereby to produce input signals that are used to control the various operations of the subject circuit 10 and of the vending machine on which it is used. When the normally open contacts of the nickel switch 18 are closed by movement of a coin thereby a first input impulse is fed from a negative potential source (−) through a surge limiting resistor 100 to a filter or pulse forming network 102 which includes a resistor 103 connected in series with a parallel combination of another resistor 104 and a capacitor 106. The pulse forming network 102 also includes a second capacitor 108 connected between ground and the junction between resistors 103 and 104, which capacitor 108 is included to absorb any stray transients such as might be produced by a bouncing switch and it also assists in shaping the input impulses. Each input impulse formed by the pulse forming network 102 then passes through a properly oriented diode 110 to a terminal A and from there to an input of the accumulator 14.

If a dime is deposited in the coin unit 12, the nickel switch 18 will be actuated as aforesaid in the case of a nickel deposit to produce the first input impulse to the accumulator 14, and the dime coin switch 20 will also be activated to produce a second accumulator input impulse in a similar manner. The dime coin switch 20 is connected to feed the second input impulse to the accumulator 14 through another pulse forming network 112, similar to the pulse forming network 102 associated with the nickel coin switch 18 and to a properly oriented diode 114 which is also connected to the terminal A. When the normally open contacts of the coin switch 20 are closed by the passage of a dime or a quarter thereby, a second input impulse is produced, which impulse is shaped by the pulse forming network 112 and is passed through the diode 114 to the accumulator 14.

When a quarter is deposited in the coin unit 12 it actuates the nickel switch 18, the dime switch 20 and the quarter switch 22 and in so doing produces five impulses all of which are fed through the terminal A to the accumulator 14. These five impulses are produced one each from switches 18 and 20, and three from the closing of the quarter switch 22 in the following manner.

When the coin switch 22 is closed by the passage of a quarter thereby, a third input impulse is fed to the terminal A to the accumulator 14 through a pulse forming network 116, which performs a function similar to the pulse forming networks 102 and 112 above. The pulse forming circuit 116 is also connected to the terminal A through a properly oriented diode 118. The pulse forming network 116 includes a resistor 120 connected in series with parallel connected capacitor 122 and resistor 124. The pulse forming network 116 also includes another capacitor 126 which is connected to the junction between resistor 120 and the parallel combination of capacitor 122 and resistor 124 on one side thereof and ground. The input impulse generated by the closing of the quarter switch 22 when a quarter passes thereby is also fed to the first one shot circuit 24 through a capacitor 130 connected on one side to the non-grounded side of the capacitor 126 which is also the junction between resistor 120 and the parallel connected capacitor 122 and resistor 124. The opposite side of the capacitor 130 is connected to a junction between a non-grounded side of a resistor 132 and a diode 134 oriented as shown. The opposite side of the diode 134 is connected to a positive potential source (+) through a resistor 136 and also through a series connected capacitor 139, a resistor 140 and a diode 141. Since the resistor 132 is connected to ground and the diode 134 is properly oriented, resistors 132 and 136 together form a voltage divider circuit which causes a positive potential to normally be present at the junction between the diode 134 and resistor 136, which junction is connected to the base of a normally conducting transistor 138 in the first one shot circuit 24. When the quarter coin switch 22 is closed by the passing of a quarter thereby, the aforementioned negative input impulse is fed through capacitor 130 to negatively charge the capacitor 139 and reduce the positive base current of the transistor 138 thereby causing it to cease conducting.

The emitter of the transistor 138 is grounded through a diode 142 which protects it from reverse voltage breakdown while the collector of transistor 138 is connected to the positive potential source through a load resistor 143. When the transistor 138 is turned off its collector potential rises from ground to some positive potential which charges a capacitor 144 connected on one side to the collector of the transistor 138 and on the other side to ground through a resistor 146. When the negative potential on the capacitor 139 is dissipated, the transistor 138 will again conduct and the charged capacitor 144 will quickly discharge which causes a negative impulse to appear across the resistor 146. This negative impulse is coupled through diodes 148 and 150 to the terminal A and to the input of the accumulator circuit 14 to form the fourth input impulse thereto.

When the transistor 138 is turned off by the negative impulse from the quarter coin switch 22, a positive potential is applied to the base of another transistor 152 in the first one shot 24 through a resistor 154 to cause it to conduct. The transistor 152 is normally in non-conducting condition at the same time the fourth input impulse is sent from the positive potential source through a series connected diode 141 and resistor 140 to the collector electrode of the transistor 152. This positive impulse is coupled through another series connected capacitor 158 and diode 160 to the second one shot circuit 26.

The second one shot multivibrator circuit 26 is similar to the first one-shot circuit 24 and includes transistors 162 and 164 which correspond respectively to the transistors 152 and 138 in the first one shot circuit 24. The transistor 162 is normally biased to a non-

conducting condition and the aforesaid positive impulse from the first one-shot circuit 24 is applied directly to its base electrode to cause the transistor 162 to conduct. The emitter of the transistor 162 is grounded and its collector is connected to the positive potential source through a load resistor 165 so that when it conducts the potential on its collector falls from some positive value to ground. This in turn generates a negative impulse through a capacitor 166 connected between the collector of the transistor 162 and the base of the transistor 164, which transistor 164 normally is biased to a conducting condition by a connection to the positive potential source through a bias resistor 167. The negative impulse fed to the base of the transistor 164 causes it to go into a non-conducting condition and to remain in that condition until the negative potential on the capacitor 166 discharges to the positive potential source through the bias resistor 167. When the transistor 164 returns to a conducting condition after the negative charge has dissipated, a negative impulse is produced through series connected capacitor 168, diode 170, diode 150 and terminal A to the accumulator 14 in a manner similar to the way the fourth negative impulse was produced from the first one shot circuit 24. This last impulse is the fifth input impulse generated by a deposit of a quarter in the coin unit 12, and as can be seen, the impulses are spaced in time by the action of the switches 18, 20, and 22 and by the actions of the one shots 24 and 26. This time spacing is important because otherwise the accumulator 14 might not be able to switch fast enough to accumulate the input impulses it receives.

When the quarter switch 22 is not being actuated by a quarter, its normally closed contacts connected the negative power source through a resistor 171 to the base of a transistor 172 in the gate 27. The base of the transistor 172 is also connected to a positive potential source through a biasing resistor 176. When the contacts of the quarter switch 22 are in their normally closed position, the base of the transistor 172 is held at a negative potential which causes it to be in a conducting condition. Since the emitter of the transistor 172 is grounded and its collector is connected through a current limiting resistor 178 to the junction between diodes 150, 148 and 170, this causes the junction between the diodes 150, 148 and 170 to be grounded, and therefore no input impulse can pass from the one-shots 24 and 26 to the accumulator 14. In this manner, the gate 27 blocks any stray signals which might be generated in the one-shots 24 and 26 due to stray transients setting them off or otherwise. When the normally open contacts of the coin switch 22 close thus properly causing the one-shot circuits 24 and 26 to generate input impulses for the accumulator 14, the negative potential is removed from the base of transistor 172 and it ceases to conduct, thereby removing the ground potential from the junction between the diodes 150, 148 and 170 and allowing the input impulses to pass therethrough to the accumulator circuit 14.

ACCUMULATOR SECTION

A preferred embodiment of the forward-back counting accumulator circuit 14 is shown in detail in FIG. 3. The accumulator circuit 14 may have several different constructions without departing from the spirit and scope of the invention and may include a binary type counter, a flip-flop counter, a ring counter, a shift register type accumulator, a magnetic core accumulator or any other equivalent accumulator. The accumulator 14 is preferably constructed using solid state elements for reliability and to minimize the size and weight of the circuitry and it includes the capability to controllably add or subtract input impulses fed thereto. As shown in FIG. 3, the accumulator 14 is a binary type counter having four binary circuit stages 200, 202, 204 and 206. The number of circuit stages is chosen for convenience and more or less can be used as is desired.

The circuit stages 200, 202, 204 and 206 are bistable circuit stages and each includes a pair of transistors which are properly connected so that one and only one of each pair can remain in a conducting condition at any time. Whenever an input impulse is sent to the accumulator circuit 14, it is fed to the input of the first bistable circuit 200 which includes opposite symmetrically connected transistors 208 and 210 connected as shown. Since the circuit 200 is bi-stable it must always be in one of two different operating states in which either the transistor 208 or the transistor 210 is conducting while the other is non-conducting. The initial or reset condition of the circuit 200 is arbitrarily predetermined for the circuit as shown to be the condition where the transistor 208 is non-conducting and the transistor 210 is conducting. This reset condition of the circuit is the condition obtained when the circuit is first energized and after each vend operation, and is also the condition produced upon the receipt of every other input signal from the coin unit 12 as will be explained. The circuit 200 as well as the circuits 202, 204 and 206 are reset initially or after a vend by means of the aforementioned reset means 80 shown in FIGS. 1 and 4 which will be discussed in detail hereinafter.

The first incoming input signal to the accumulator 14 which is a negatively going impulse will be fed through a capacitor 212 and a diode 214 in series therewith to the base element of the conducting transistor 210. This will cause the transistor 210 to turn off or become non-conducting. Another resistor 216 is connected on one side to the common junction of the elements 212 and 214 and on its other side to the collector electrode of the transistor 210. The resistor 216 provides a relatively high resistance connection between the aforementioned junction and collector to help in switching succeeding input signals from one transistor to the other. As soon as the transistor 210 turns off, its load resistor 218 passes a positive impulse through a resistor 220 which is connected to the base element of the transistor 208. This positive impulse causes the transistor 208 to turn on or to conduct thereby completing a reversal of the initial condition of the circuit 200. The circuit 200 in its reversed condition acts as a memory circuit to remember the fact that one nickel, in the present case, has been deposited or entered into the accumulator circuit 14. This condition remains until another incoming signal is received from the coin unit to cause the circuit 200 to flip back to its previous or reset condition. This can be brought about by the deposit of a second nickel or by the deposit of another coin which causes a second similar negative input signal to be fed to the circuit 200, or it can be accomplished by the action of the payback means as will be described hereinafter.

The second input signal to the accumulator **14** instead of passing through the capacitor **212** and the diode **214**, passes through a similar input circuit which includes series connected capacitor **222** and diode **224** to the base of the transistor **208**. This second input signal operates in a manner similar to the first input signal but with respect to the transistor **208** which is now conducting instead of with respect to the transistor **210** which is now non-conducting. The second input therefore operates to turn the transistor **208** off and this in turn causes a positive impulse to pass through a load resistor **226** and another resistor **228** to the base of the transistor **210** which is turned on and caused to again conduct. The circuit **200** is now returned to its original reset condition which condition represents either no deposit or a deposit of an even number of nickels or other coins of the lowest acceptable denomination.

The circuit of the transistor **208** is similar to the circuit for the transistor **210** and includes a switching resistor **230** connected as shown. The emitter elements of both transistors **208** and **210** are normally grounded and the base elements are shown biased to an operating condition by means of a balanced circuit which includes resistors **232** and **234**, respectively, and a negative biasing source. The input A to the circuit **200** shown at terminal A is also shown connected to ground through parallel connected resistor **236** and capacitor **238** which operate to shape the input signals and to provide a discharge path for the capacitors **212** and **222**.

The circuit stage **200** is connected to the next binary circuit stage **202** through gates formed by series connected capacitor **240** and diode **242** which are connected on one side to the collector of transistor **208** and by similarly connected capacitor **244** and diode **246** connected to the collector of transistor **210**. Control lines **248** and **250** are connected to the gate junction between the capacitor **240** and diode **242** and the gate junction between capacitor **244** and diode **246**, respectively. The control lines **248** and **250** are connected to the aforementioned vend flip-flop **82** which, as will be described in detail later, causes one line to be connected to the positive potential source and the other to be grounded. When the accumulator **14** is to be in its add or forward count condition, the line **248** is connected to the positive potential source and control line **250** is grounded, while the control line **250** is connected to the positive potential source and control line **248** is grounded when it is desired that the accumulator circuit **14** be in a subtract or backward counting condition. When either of the control lines **248** or **250** is being maintained in a positive condition, it back biases its associated diode connecting the circuit stages, which back biased diode then prevents signals from passing from one stage to the other therethrough. Signals can, however, pass through the other connecting diode whose cathode is at ground potential.

When the accumulator **14** is in its add or forward counting condition with the gate formed by the capacitor **240** and the diode **242** blocked by the presence of a positive potential on the control line **248**, and the gate formed by the capacitor **244** and the diode **246** open because of the ground condition of the control line **250**, the following will happen. Everytime the transistor **210** is turned on, the voltage on its collector element will change from some positive value to a zero or near zero value, and when this occurs a negative going D.C. signal is produced and fed through the open gate formed by the capacitor **244** and the diode **246** as an input to the second stage bi-stable circuit **202**.

The circuit stage **202** is similar in construction and operation to the circuit stage **200** and includes two oppositely connected transistors **252** and **254** connected as shown. In its reset condition, the transistor **252** is turned off or non-conducting and the transistor **254** is turned on. The circuit stage **202** is the ten cent reading circuit stage and receives an input signal for every two changes in the state of the first circuit stage **200** when the accumulator **14** is in its add condition. When the second input signal to the accumulator **14** causes the circuit stage **200** to return to its original or reset state, the negative going D.C. signal produced as aforesaid is fed through the capacitor **244** and diode **246** as an input to the second circuit stage **202** and is applied to the base of the transistor **254** in a manner similar to the way in which the first input signal to the circuit stage **200** was applied to the base of the transistor **210**. This causes the transistor **254** to turn off or become non-conducting and at the same time produces a positive impulse which is applied to the base of the transistor **252** to turn it on. Hence, after two input signals are received representing the deposit of two nickels or one dime, the first circuit stage **200** will be in its original or reset state and the second circuit stage **200** will be in its transferred state. This condition is sufficient to cause a vend signal to be produced if a ten cent vend is called for as will be explained.

The other two circuit stages **204** and **206** of the accumulator **14** are also similar to circuit stages **200** and **202** and include pairs of oppositely connected transistors **256** and **258**, and **260** and **262** respectively. When the accumulator **14** is in its reset condition the transistors **256** and **260** are non-conducting and the transistors **258** and **262** are conducting.

If a "zero" is assigned to an accumulator stage in a reset state and a "one" to a stage that is in a set or transferred state the following table can be generated to equate the states of the accumulator stages with the amount deposited in the vending machine.

STAGE	200	202	204	206	EQUIVALENT IN CASH
STATE	0 0	0 0	0		0
	1 1	0 0	0		5
	2 0	1 0	0		10
	3 1	1 0	0		15
	4 0	0 1	0		20
	5 1	0 1	0		25
	6 0	1 1	0		30
	7 1	1 1	0		35
	8 0	0 0	1		40
	9 1	0 0	1		45
	10 0	1 0	1		50
	11 1	1 0	1		55
	12 0	0 1	1		60
	13 1	0 1	1		65
	14 0	1 1	1		70
	15 1	1 1	1		75

These representations hold as long as the accumulator is in a forward or add condition and if additional stages are added to the accumulator **14** its capacity will, of course, be increased accordingly.

When the accumulator 14 is in its subtract or backward counting condition, however, the gate formed by the capacitor 240 and the diode 242 is open while the gate formed by the capacitor 244 and the diode 246 is closed. Under these condition when the accumulator 14 is in its reset condition, the first input impulse will cause the transistor 208 instead of the transistor 210 to turn on. This of course causes the voltage on its collector element to change from some positive value to a zero or near zero value. When this occurs, a negative going D.C. signal is produced and fed through the open gate formed by the capacitor 240 and the diode 242 as an input signal to the second bi-stable circuit stage 202. The output signal causes the transistor 252 to change from its non-conducting to its conducting state and in so doing generates an input signal to the third stage 204 to change its state which in turn will send another input signal to the fourth counter stage 206 to change its state also. It can therefore be seen that if the accumulator 14 is in its reset or 0000 state, and if it is in its subtract or backward condition or mode, the first input signal there will cause changes that result in an overall accumulator state of 1111. Referring back to the above table, the states of the stages after a subtracted signal can be found by starting from a particular state of the stages and going up one line for each subtracted signal. For example, if 50 cents has been deposited, 10 impulses will have been fed to and added in the accumulator 14 to produce an overall state represented as 0101. If the vend price is 35 cents, then three subtract impulses representing a 15 cent payback will return the accumulator to a state of 1110 which represents 35 cents, or three lines up on the table.

It should be noted that the monetary equivalent of the binary code shown in the table goes up in 5-cent increments for each input impulse which is fed to the accumulator 14 when it is in its add or forward count condition and down in 5-cent increments when it is in the backward or subtracting condition. This is very important to the present invention since the present device utilizes only one counting and memory means, the accumulator 14, to sense when the amount deposited in the vending machine equals or exceeds the price of a possible vend and also to count or determine the amount in excess of the price of the selected vend which is to be returned to the customer.

As indicated more or less circuit stages similar to the circuit stages 200, 202, 204 and 206 can be used depending on the desired accumulating capacity, the cost of the desired vends, and the coin demoninations that are acceptable. For example, a penny circuit, a 50-cent circuit, a dollar circuit or any number of circuits including duplications of the circuit already mentioned can be added. The subject circuit can be also be adapted for use with tokens and foreign coinage with minor modification. The circuits 200, 202, 204 and 206 in the embodiment of the device disclosed can accumulate input impulses representing the deposit of fifteen coins of the lowest acceptable coin denomination. If one more stage is added the capacity of the accumulator 14 is increased to the extent that it will accumulate a total deposit of 29 of the lowest denomination coins. If more or less similar circuits are included in the accumulator 14 the capacity thereof can be calculated using the expression 2^n-1, where n equals the number of circuit stages.

PRICE SELECTION SECTION

The collector of each transistor in the circuit stages of accumulator 14 is connected as an input to the price controls 28 and 30 using the terminals Q1 through Q8 as shown in FIGS. 3 and 4. The price controls 28 and 30 are similar to each other and each includes a single pole double throw switch corresponding to each circuit stage of the accumulator 14 which in the embodiment illustrated is four. The stationary contacts of the switches 300, 302, 304, and 306 in the price control 28 and of switches 308, 310, 312 and 314 in the price control 30 are connected to collectors of the opposite transistors in each of the circuit stages 200, 202, 204 and 206, respectively. For example, the collectors of the transistors 208 and 210 in the first stage 200 are connected respectively to the two stationary contacts of the switches 300 and 308, the collectors of the second stage transistors 252 and 254 are connected to the stationary contacts of the switches 302 and 310 and so on for the other stages. The movable contacts of the 300–306 switches in the price control 208 are connected to the gate 36 while the movable contacts of the switches 308–314 in the price control 30 are connected to the gate 38. This means of course that the potential present on the collector of one of the opposite transistors in each of the accumulator circuit stages is always coupled to at least one and perhaps to both of the gates 36 and 38.

The gate 36 includes similarly oriented gate diodes 316, 318, 320 and 322 which are connected respectively to the movable contacts of the switches 300, 302, 304 and 306. The gate diodes 316, 318, 320 and 322 connect the respective collector potentials from the accumulator 14 to a voltage divider network 323 which is made up of a resistor 324 connected between the gate diodes and the positive potential source on one side and series connected resistors 326 and 328 connected between the gate diodes and the negative potential source on the other side. Whenever the collector of any accumulator transistor connected to the gate 36 by the price switches is at ground potential due to that particular transistor being in a conducting condition, the voltage divider network 323 applies a negative potential to the control circuit 40 through terminal E which is connected to the junction between the series connected resistors 326 and 328. When all the connected transistors are in a non-conducting condition, the collectors thereof will be at a positive potential and this will couple through the switches of the price control 28 and the gate diodes to cause a positive potential to appear on terminal E and to be fed to the control circuit 40. For the positions of the switches of the price control 28 as shown in FIG. 4, switch 300 is in the 5-cent position, switch 302 is in the 10-cent position, and switches 304 and 306 are in their zero conditions, thus requiring the accumulator 14 to be in a condition of a 15-cent deposit to apply a positive potential through terminal E to the control circuit 40. If the switches 304 and 306 were also in their alternate positions, which in the case of the switch 304 is indicated as 20 cents, and of the switch 306, 40 cents, the total accumulation that would be 75 cents, or in other words, the sum of all of the values of the switches 300–306 as indicated in FIG. 4. The same is also true of price control 30 and its associated gate 38. When each of the switches 308 through 314 in the price control 30 is passing a positive

potential from the connected collectors in the accumulator 14, the gate 38 is opened, at which time a positive potential is fed to the control circuit 60 (FIG. 5) through means which include the terminal F.

As aforesaid, the positions of the price control switches are predeterminately set by someone such as the service personnel or the owner of the vending machine, and by properly positioning the price switches, any price from 0 to 75 cents, in nickel increments, can be set as the price required to open the gates 36 or 38 to enable a vend by means to be discussed in detail later. The two price controls 28 and 30 can be set with one having a higher setting than the other or they both can be set to the same price. It is undesirable, however, that either or both price controls 28 and 30 be set so that a zero condition of the accumulator 14 will satisfy the gate requirements and allow a positive potential to be sent to the control circuit 40 and/or 60 before the deposit of any money. For this reason, the safety clamp circuit 32 is provided.

The safety clamp 32 is permanently connected to the collectors of the transistors 208, 252, 256 and 260 in the accumulator 14 through circuits which includes the terminals Q1, Q3, Q5 and Q7. When all these transistors are in their non-conducting conditions so their collectors are at a positive potential, which is the reset condition of the accumulator 14 and represents a zero count therein, the collectors of the said named transistors are coupled through diodes 334, 336, 338 and 340, respectively to a voltage divider network 341 which is similar to the voltage divider networks discussed above in connection with gates 36 and 38. The voltage divider network 341 includes series connected resistors 342, 344 and 346 connected between the positive potential source and the negative potential source with the collector potentials coupled to the junction between the resistors 342 and 344. The base of a transistor 348 which is also part of the safety clamp circuit 32 is connected to the junction between resistors 344 and 346. Only when a positive potential is being coupled through the diodes 334, 336, 338 and 340, which means the accumulator 14 is in a zero condition, will positive current appear on the base of transistor 348 to cause it to conduct. The emitter of transistor 348 is grounded while its collector is connected through a first diode 350 to the junction between the resistor 326 and 324 in the gate circuit 36 and through a second diode 352 to the corresponding junction in the gate circuit 38. When the transistor 348 is conducting, which is the case when there is a zero count in the accumulator 14, it grounds the two gates 36 and 38 and causes them to remain in a closed condition even if the switches in their respective price controls 28 and 30 are set to a zero condition.

When the transistor 348 is conducting the safety clamp 32 also applies a ground potential through a diode 354 to the refund flip-flop 82 to assure that it remains in in a reset condition. The safety clamp 32 at the same time also applies a ground potential through another diode 356 to the gates 48 and 68 the functions of which will be discussed hereafter.

CONTROL SECTION

Referring to FIG. 5, the control circuit 40 in channel A and the control circuit 60 in channel B are similar circuits which respond to the outputs of the gates 36 and 38, respectively, on the terminals E and F. In channel A, for example, the normal negative potential output of the gate 36 is fed to the base element of a transistor 400 in control circuit 40 which causes the transistor 400 to remain in its normally non-conducting condition and to conduct only when the gate 36 is opened by the proper set up of positive potentials fed through the price switches connected thereto. The emitter of the transistor 400 is grounded and its collector is connected to a positive potential source through a load resistor 402. When the transistor 400 is turned on by a positive potential from the gate 36, its collector of course is reduced from positive potential to ground. This generates a negative going pulse through a capacitor 404 connected to the collector of transistor 400 which is coupled through a series connected diode 406 and capacitor 408 and terminal I to the refund flip-flop 82. This resets the flip-flop and assures that it is in a reset condition. This function of the control circuit 40 is important to terminate a payback operation and will be discussed more in detail later.

The collector of transistor 400 is also connected to the gate 44 through a resistor 410 in such a manner that when transistor 400 is in its normally non-conducting condition, the gate 44 is closed and when transistor 400 is in its conducting condition indicating that the exact amount set in the price control 36 has been deposited in the accumulator 14, the gate 44 is opened.

The collector of the transistor 400 is also connected to the base of a second transistor 412 through a resistor 414. The emitter of the transistor 412 is grounded and its collector is connected to a positive potential source through series connected resistors 415 and 416. When the transistor 412 is in its normally conducting state due to the transistors 400 being in its normally non-conducting state the potential between the resistors 415 and 416 is appreciably reduced below that of the positive potential source and this reduced positive potential is fed to the gate 42 through another resistor 418 to maintain the gate 42 in a condition which is open only to relatively large negative impulses as will be described hereinafter. When the transistor 412 is in its non-conducting state because transistor 400 is conducting a high positive potential is applied through the resistor 418 to the gate 42 which closes it to negative impulses whether they be large or small.

As can be seen from the foregoing, the control circuit 40 controls the condition of gates 42 and 44 so that normally the gate 42 is in an open or conducting condition and the gate 44 is in a closed or non-conducting condition which conditions are reversed when the accumulator 14 has an amount accumulated therein which is exactly the amount set in the price switches for the price control 28.

The price control 60 as aforesaid is similar to control circuit 40 and includes transistors 420 and 422 which correspond to the transistors 400 and 412 of the control circuit 40. The control circuit 60 operates in a manner similar to control circuit 40 and responds to signals passed by the gate 38 indicating that the B channel price has or has not been satisfied to normally maintain the gate 62 in an open or conducting condition to relatively large negative impulses and at the same time to maintain the gate 64 in a closed condition, which

conditions are reversed whenever the gate **38** senses that the stages of the accumulator **14** are in the states equivalent to the exact price as established by the B channel price switches in the price control **30**. When the transistor **420** of the control circuit **60** is turned on by a signal from the gate **38**, it like the transistor **400**, causes a negative going impulse to be generated through a capacitor **424** and a diode **426** of the gate circuit **66** and through the capacitor **408** and the terminal I to assure that the refund flip-flop **82** is in its reset condition when the gate **66** is in an open condition.

Referring again to channel A, the collector of the transistor **412** in the control circuit **40** is connected to another gate **48** through a gate capacitor **428**. A positive potential impulse is generated by the transistor **412** when it is turned off, which impulses pass through the gate **48** to the channel A credit flip-flop **50** as long as the gate **48** is in an open condition which is always the case unless the safety clamp logic is satisfied or the payback control **84** is in a payback cycle.

The gate **48** includes the gate capacitor **428** and a diode **430** which connects the gate **48** to the aforesaid safety clamp **32** through the terminal G and to the payback control **84** through terminal H for control purposes. The gate **48** also includes a connection to ground through a resistor **432** which is provided to ground out any negative potential which might otherwise build up in the gate **48**. As long as the diode **430** is not passing a ground potential into the gate **48** to close it, the impulse from the transistor **412** passes therethrough and through a properly oriented diode **434** to the A channel credit flip-flop **50**. This impulse is applied to the base of a transistor **436** which along with an oppositely connected transistor **438** form the active elements of the credit flip-flop **50**.

The transistor **436** is in a non-conductive condition when the credit flip-flop **50** is in its reset state. The conditions of the transistors **436** and **438** are reversed when the impulse is sent through gate **48** to the base of the transistor **436** which causes it to turn on and which in turn causes the transistor **438** to turn off in conventional flip-flop fashion. The collector of the transistor **438** is connected to a positive potential source through load resistor **440**, and its emitter is grounded so that when the credit flip-flop **50** goes from its reset to its set state at which time the transistor **438** turns off, the potential at the collector of the transistor **438** rises from ground potential to a positive potential. This positive potential is fed to the vend selector **52** to charge a capacitor **442** through a circuit which includes a resistor **444** to enable the vend selector **52**. In parallel with the resistor **444** are series connected a resistor **446** and a diode **448**. The diode **448** is oriented so that the capacitor **442** is discharged to ground whenever transistor **438** of the credit flip-flop **50** returns to its conducting condition. An example of this happening would be when a vend is made in the B channel after the A channel credit flip-flop **50** is set by the deposit of an amount at least equal to the value set by the A channel price switches. When the vend is made both of the credit flip-flops **50** and **70** are reset and this in turn discharges capacitor **442** as described above. This is important since the capacitor **442** is the enabling device for the vend selector **52**, and it is in an enabled condition when it is charged.

The B channel includes the credit flip-flop **70** which is similar to the credit flip-flop **50** and includes transistors **450** and **452** which correspond, respectively, to the transistors **436** and **438** of the A channel credit flip-flop **50**. The B channel flip-flop **70** is connected to the B channel control circuit **60** by means of the gate circuit **68** which includes a capacitor **454** and a diode **456**. The control for the gate **68** is provided by means of a connection through a diode **458** to the safety clamp **32** and the payback control **84**, and as in the case of the gate **48** only when the safety clamp **32** or the payback control **84** is energized and passing ground potential to the gate **68** will it block inputs from the collector of the transistor **422** in the control circuit **60** to the B channel credit flip-flop **70**. The normally non-conducting transistor **452** of the B channel credit flip-flop **70** has its collector connected to an input circuit for the B channel vend selector **72** which includes a resistor **460** and a capacitor **462**, which capacitor **462** is the enabling device for the B channel vend selector **72**, and is caused to be in a charged condition whenever transistor **452** is in a conducting condition indicating that the B channel credit flip-flop **70** is in its set or credit condition. In this way the capacitor **462** functions in a manner similar to the vend selector enabling capacitor **442** in the A channel vend selector **52**.

As aforesaid, when either the capacitor **442** or **462** is charged, it enables its respective vend selector **52** or **72**, and thereby allows a customer to initiate a vend operation in that channel. The means by which the customer initiates a vend may include many suitable devices including the means shown in FIG. **5** as being normally open pushbutton switches **464** and **465**. In the case of a channel A vend, the customer depresses the vend selector pushbutton switch **464** which discharges capacitor **442** through relay contacts **466** and resistor **468** to ground. This causes a positive potential to appear across resistor **468**, which positive potential is coupled through a series connected diode **470** and resistor **472** to the base of a transistor **474** in the vend control **54**.

The transistor **474** is normally non-conducting and the positive potential from the actuated vend selector **52** causes it to go into a conducting condition which energizes A channel vend relay **476** connected to the collector of the transistor **474** for actuating mechanical devices in the vending machine (not shown) which actually produce the A channel vend.

The A channel vend relay **476** has two sets of contacts **478** and **480**. The relay contacts **480** are part of the vend selector **72** and are used to control the channel determining flip-flop **92** and also to assist in preventing a double vend as will be described later. In their normally closed condition, the contacts **478** connect a capacitor **482** to the source of positive potential through a resistor **484** to charge it positively. When the relay **476** is energized, the contacts **478** move from their closed to their open position and the positive charge on the capacitor **482** is applied through a resistor **486** to supply positive base current to the transistor **474** to maintain it in a conducting condition for a preselected time which is the time required by the vending machine to produce a vend. The vend relay **476** cannot be energized until after the last deposited coin has cleared the coin chute due to the fact that the

capacitor 442 must charge to a predetermined value under control of a circuit time constant established by the resistors 444 and 440. This time constant is selected to be long enough to cover the time required for a coin to move completely through the coin unit. Should the customer have preselected a vend by pressing on the switch 464 before a credit condition has been established and should he hold the switch 464 closed while making additional deposits sufficient to complete the required credit condition or to produce an excess credit condition, the charging of the capacitor 442 in that case will be delayed due to the low impedance path provided by the closed selection switch 464 and resistor 472 and the low impedance of the base emitter junction of the transistor 474. This condition will continue to exist until such time as the customer releases the switch 464. Once the capacitor 482 has discharged through resistor 486, and the base-emitter junction of the transistor 474, the transistor 474 returns to its normally non-conducting condition which deenergizes the A channel vend relay 476.

The initial closing of the normally open contacts 478 also produces a positive impulse through a series connected capacitor 488 and a diode 490 which is applied to the bases of the transistors 438 and 452 in the A and B channel credit flip-flops 50 and 70, respectively, to return the flip-flops 50 and 70 to their reset or no-credit indicating conditions, thus assuring that one and only one vend will be made for each depression of the enabled vend selector switch 464 or 465.

When the relay 476 deenergizes allowing its contacts 478 to return to their normally closed position, the now discharged capacitor 482 is reconnected through the resistor 484 to the positive potential source which immediately begins recharging the capacitor 482. This immediate recharging of the capacitor 482 abruptly lowers the potential on the side of the resistor 484 opposite from the positive potential source and generates a negative going impulse which is the delayed output signal from the vend control 54 discussed above. The delayed output signal is connected by a line 491 to the gates 42 and 44 either to be passed therethrough or be blocked depending upon the condition of the control circuit 40, as aforesaid.

If, for instance, the accumulator 14 is sensing the exact acmount of the A channel vend, the gate 42 will be closed while the gate 44 will be open. This causes the negative impulse from the vend control 54 to be coupled through a capacitor 492 and a diode 494 of the gate 44 to the reset means 80 by means which include terminal J. This will cause resetting of the accumulator 14 and will assure that the refund flip-flop 80 and credit flip-flops 50 and 70 are in their reset conditions.

If the amount deposited in the vending machine is in excess of the vend price as required by the setting of the price control switches in channel A, the gate 42 would have been open and the gate 44 would have been closed to the aforementioned impulse from the vend control 54. The same impulse therefore would have been coupled through a capacitor 496 and a diode 498 of the gate 42 to the refund flip-flop 82 on a circuit which includes terminal K to cause the refund flip-flop 82 to change to its set or refund state to commence a payback cycle which, of course, will continue until the amount accumulated in the accumulator 14 is reduced to the exact amount as set in the price control switches, at which time the payback cycle will cease as will be explained hereinafter.

If the customer desired a vend out of the B channel instead of out of the A channel, he depresses the vend selector pushbutton switch 465, which discharges the capacitor 462 through the relay contacts 480 and resistor 500 to ground. This causes a positive potential to appear across the resistor 500, which positive potential is coupled through series connected diode 502 and resistor 504 to provide positive current to the base of another transistor 506 in the vend control 74.

The transistor 506 is normally non-conducting having its emitter element grounded and its collector element connected through a B channel vend relay 508 to the unregulated positive power source indicated by (+). The positive base current from the actuated vend selector causes the transistor 506 to conduct which in turn energizes the B channel vend relay 508. The relay 508 when energized actuates the mechanical devices in the vending machine whose actions produce the B channel vend.

The B channel vend relay 508, like the A channel vend relay 476, has two sets of relay contacts 466 and 510. The first set of relay contacts 466 are part of the vend selector 52 and like relay contacts 480 are used to control the state of the channel determining flip-flop 92 and also to assist in preventing a double vend as will be discussed. In their normally closed position the contacts 510 connect one side of a capacitor 512, whose opposite side is grounded, to the positive potential source through a resistor 514, thus charging the capacitor 512 positively. When the vend relay 508 is energized to cause a B channel vend, the contacts 510 move to their open position and the positive charge on the capacitor 512 is applied through a resistor 516 to supply positive current to the base of the transistor 506 to maintain it in a conducting condition for a preselected vend time required by the vending machine to produce a vend. As in the A channel, the preselected time is also long enough to assure that any coin in the coin unit 12 completes the coin path before the vend time is over. This is important as stated previously, because otherwise it would be possible to lose money in the machine by pressing the vend selector pushbutton before the last deposited coin had cleared the coin path. Once the capacitor 512 has discharged through the resistor 516 and the base-emitter junction of the transistor 506, the transistor 506 no longer has positive current supplied to its base and it returns to its normally non-conducting condition to deenergize the B channel vend relay 508.

The initial closing of the open contacts 510 also produces a positive impulse through series connected capacitor 518 and diode 520 to the bases of the transistors 438 and 452 in the A and B channel credit flip-flops 50 and 70, respectively, to maintain or return the flip-flops 50 and/or 70 to their reset or no-credit conditions, thus assuring that one and only one vend will be made for each depression of the enabled vend selector switch 464 or 465. It should be recognized that this operation always happens when either an A or B channel vend is actuated. It should also be noted that when energized the A channel vend relay 476 immediately disables the vend selector 72 in the B chan-

nel and when the B channel vend relay **508** is energized it immediately disables the vend selector **52** in the A channel by interrupting circuit paths therethrough by opening relay contacts **480** and **466**, respectively. It is therefore impossible to produce two vends out of the subject device by depressing both pushbutton vend selector switches **464** and **465** simultaneously even though enough money was deposited in the coin unit **12** to satisfy the logic for both. This is because, in the case of both sets of the relay contacts **466** and **480**, there is a time period during which either the normally closed or the open contacts are in fact establishing a circuit. For example, should both push button switches **464** and **465** be closed simultaneously, both vend relays **476** and **508** will energize and both sets of relay contacts **466** and **480** will try to go to their open positions. The instant either set of relay contacts **466** or **480** breaks its normally closed contact, however, which is in series with the opposite channel, that opposite channel vend control driver transistor **474** or **506** will lose the positive current supplied to its base and its associated relay will therefore be deenergized. As a further safeguard against a double vend, the vend relay **476** or **508** that does manage to close its normally open contacts will reset both credit flip-flops **50** and **70** as aforesaid which immediately causes the enabling capacitors **442** and **462** in their respective vend selectors **52** and **72** to be rapidly discharged through the vend enabling transistors **438** and **452** of the credit flip-flops **50** and **70**, respectively.

Referring again to the conditions when a B channel vend has been initiated, and when the vend relay **508** deenergizes allowing its relay contacts **510** to return to their normally closed position, the now discharged capacitor **512** is reconnected through the resistor **514** to the positive potential source which immediately begins recharging the capacitor **512**. This relatively abrupt recharging of the capacitor **512** abruptly lowers the potential on the side of the resistor **514** opposite from the positive potential source to generate a negative going impulse which is the delayed output signal from the vend control **74** discussed above. The negative impulse is conducted on line **522** to gates **62** and **64** either to be passed therethrough or blocked depending upon the condition of the control **60** as aforesaid. If for instance the accumulator **14** is sensing the exact amount of the B channel vend, gate **62** will be closed while gate **64** will be open and in a conducting condition. This causes the negative impulse from the vend control **74** to be coupled through a capacitor **524** and a diode **526** in the gate **64**, to actuate the reset means **80** by way of a circuit which includes the terminal J. This causes a reset of the accumulator **14** and assures that the refund flip-flop **80** and the credit flip-flops **50** and **70** are in or are caused to go into their reset conditions.

If the amount deposited in the vending machine is in excess of the vend price as required by the setting of the price control **30** in the B channel, the gate **62** would have been open or in a conducting condition and the gate **64** would have been closed to the aforementioned negative impulse from the vend control **74**. The negative impulse therefore would have passed through a capacitor **528** and a diode **530** of the gate **62** and through a circuit which includes the terminal K to the refund flip-flop **82** to cause it to change to its set or refund state to commence a payback cycle which, of course, will continue until the accumulator **14** is reduced to the exact amount as set in the price control **30** at which time the payback cycle will cease as will be explained.

Whenever the A channel vend relay **476** or the B channel vend relay **508** is energized to close the normally open vend relay contacts **480** or **466**, respectively, the channel determining flip-flop **92** is maintained or changed to a condition which indicates to the rest of the circuit which channel was the channel from which the last vend was made. The channel determining flip-flop **92** is similar to the credit flip-flops **50** and **70** and includes opposite symmetrically connected transistors **540** and **542**. The channel determining flip-flop **92** is also bi-stable so that when power is being supplied to the circuit either the transistor **540** or **542** is in a conducting condition while the other or opposite transistor is in a non-conducting condition. When the circuit **10** is initially turned on, one of the two transistors **540** or **542** will assume a conducting condition and the other a non-conducting condition. Thereafter, when the first vend is made, as for example, if a channel A vend is made, the relay **476** will energize to close the normally open vend relay contacts **480** which connect the collector of the transistor **540** of the channel determining flip-flop **92** to ground, through a pulse forming circuit designated generally by **544** and through the resistor **500**. If at this time, the transistor **540** is in a conducting condition nothing further will happen because a conducting condition of the transistor **540** is indicative that the A channel was the last channel in which a vend was made. If, however, the transistor **540** is non-conducting and therefore the transistor **542** is conducting, a negative impulse is produced through the filter network **544** and is fed through a biasing resistor **546** to the base of the transistor **542** to cause it to go to a non-conducting condition which in turn causes the transistor **540** to go to a conducting condition thus indicating that the last vend was made out of the A channel. The impedances of the channel determining flip-flop **92**, the pulse forming network **544**, and the resistor **500** are chosen so that when the normally open contacts **480** close to change the state of the channel determining flip-flop **92**, and thus impress a positive potential across resistor **500**, that the potential thus impressed not be sufficiently high or of sufficient duration to cause transistor **506** in the B channel vend selector **74** to go into a conducting condition. This would be very undesirable if it occurred since it would result in a second or continuous vending out of the machine. The same is also true of the corresponding impedances in the A channel.

When a vend is made in the B channel, the vend relay **508** in the B channel vend selector **74** is energized as aforesaid and closes its normally open contacts **466**, which contacts operate in a manner similar to the contacts **480** of the relay **476**, to apply a negative impulse to the base of the transistor **540** in the channel determining flip-flop **92**. If the transistor **542** at this time is in a non-conducting condition this will operate to change its state and the state of the channel determining flip-flop **92** so that the transistor **542** will go into a conducting condition and the transistor **540** into a non-conducting condition thereby indicating that the last vend was made under control of the B channel.

The collectors of the transistors **540** and **542** in the channel determining flip-flop **92** are connected to control the operation of the gates **46** and **66**, respectively. When the channel determining flip-flop **92** is in its A channel determining position wherein the transistor **540** is conducting and the transistor **542** is non-conducting, a ground potential is fed to the gate **46** while a positive potential is fed to the gate **66**. The gate **46** is therefore in an open condition able to pass signals therethrough whereas the gate **66** is closed and will not permit signals to pass. If the channel determining flip-flop **92** is in its opposite condition, that is where the transistor **542** is conducting and the transistor **540** is non-conducting, the opposite result happens so that the gate **66** is open or conducting and the gate **46** is closed. The gates **46** and **66** are important means for determining when a proper payback has been made as will be discussed hereinafter.

When a vend is made under control of either channel in the present device and the amount thereof is less than the amount accumulated in the accumulator **14** an impulse is sent from the appropriate vend selector **52** or **72** through the gate **42** or **62** via terminal K to the refund flip-flop **82** to set it into a payback condition as aforesaid. The refund flip-flop **82** includes two opposite symmetrically connected transistors **560** and **562** (FIG. **4**). The refund flip-flop **82** is a bi-stable circuit constructed so that when the transistor **562** is conducting the refund flip-flop is in its reset or no refund state. The collectors of the transistors **560** and **562** are connected to a positive potential source through load resistors **564** and **566**, respectively, and the emitter of the transistor **562** is grounded directly and the emitter of the transistor **560** is grounded through the reset means **80**. The collector of the transistor **560** is connected through a resistor **568** to the base of another transistor **570** which has its emitter grounded as shown and its collector connected to the positive potential source through load resistor **572**. When the refund flip-flop **82** is in its reset or no-refund state, the collector of the transistor **562** is at or near ground potential and the collector of the transistor **560** is at a positive potential. The positive potential condition of the collector of the transistor **560** causes the transistor **570** to be in a conducting condition which in turn causes its collector to be at ground potential. This ground is coupled to the forward count line **250** of the accumulator **14** (FIG. **3**) through terminal D.

A circuit similar to the circuit of the transistor **570** is connected to the collector of the transistor **562** and includes another transistor **574**. The base of the transistor **574** is connected through a resistor **576** to the collector of the transistor **562**. Since the transistor **562** is normally in a conducting condition when the refund flip-flop **82** is in its reset or non-refund state, its collector is at or near ground potential, which ground is applied through the resistor **576** to the base of the transistor **574** to cause it to be in a non-conducting condition. Since the emitter of the transistor **574** is grounded and its collector is connected to the positive potential source through a load resistor **578**, a positive potential appears on the collector of the transistor **574** whenever it is in its non-conducting condition, and this positive potential is coupled by means including terminal C to the count back line **248** of the accumulator **14** (FIG. **3**). As aforesaid, when the lines **248** and **250** to the accumulator are respectively at positive and ground potentials the accumulator **14** is in its forward counting condition. Therefore, it can be seen that any time the refund flip-flop **82** is in its reset or non-refund condition the accumulator **14** will be in its forward counting condition.

When the refund flip-flop **82** is caused to go into its set or payback condition by means of an impulse received from the vend selector **54** or **74** through the associated gate **42** or **62**, which impulse is applied to the base of the transistor **562** to cause it to go into a non-conducting condition thereby also causing the transistor **560** to go into conducting condition, the conditions of the transistors **570** and **574** reverse so that the transistor **570** is non-conducting and the transistor **574** is conducting. This causes a positive potential to be applied by way of terminal D to the forward count line **250** of the accumulator **14** and ground potential to be applied by way of terminal C to the backward count line **248** to cause the accumulator **14** to go into a back count or subtract counting condition.

When the transistor **560** goes into a conducting condition when the refund flip-flop **82** is set, its collector which is connected to the positive potential source through the load resistor **564** and is normally at a positive potential, drops to ground or near ground potential. This ground potential is applied through a series connected resistor **606** to the base of a transistor **608** in the refund control circuit **84**. The transistor **608** is normally biased to a conducting condition by a voltage divider network made up of resistors **564**, **606** and **610** with the resistor **610** connected between the base of the transistor **608** and ground. The collector of the transistor **608** is connected to the positive potential source through a load resistor **612** and its emitter element is grounded. Therefore, when there is ground potential on the collector of the transistor **560** it causes the transistor **608** to go into a non-conducting condition at which time the potential on its collector rises from ground potential to a positive potential. This positive collector potential is fed through resistors **613** and **614** to transistors **615** and **616**, respectively in the payback control **84**. The transistors **615** and **616** are normally non-conducting and their emitters are grounded as shown. The transistor **615** has its collector connected to the gates **48** and **68** (FIGS. **1** and **5**) by means of terminal H while the collector of the transistor **616** is connected through a payback relay **618** to the unregulated positive potential source indicated by (+). When the positive potential from the collector of the transistor **608** is applied through the resistors **613** and **614** to the transistors **615** and **616**, respectively, both transistors conduct. When transistors **615** conducts it applies a ground potential through diodes **430** and **458** (FIG. **5**) in the gates **48** and **68**, respectively to cause them to be in a closed condition so that further outputs from the control circuits **40** and **60** will not establish an erroneous credit condition of the credit flip-flop circuits **50** and **70**. When the transistor **616** conducts it energizes payback relay **618** as stated. The payback relay **618** in turn closes its relay contacts **620** in the payback motor circuit and in so doing applies line current indicated by L1 and L2 to the payback motor **86**. The energized

payback motor **86** thereafter pays back one coin of lowest acceptable denomination. As the payback motor **86** approaches the end of the payback cycle for each coin paid back, other means are connected to the payback motor **86** shown by dotted line **622** and terminal P which cause the payback switch **88** (FIG. 2) to cycle. The payback switch **88** is connected in series with relay contacts **624** which are moved from the position shown in FIG. **2** to a closed condition when payback relay **618** is energized. The series combination of the switch **88** and contacts **624** when both in the energized or transferred condition are in parallel with the nickel coin switch **18** and produce an impulse which is fed to the accumulator **14** each time the payback switch **88** is cycled by the payback motor **86**. Each of these impulses passes through the same pulse forming network **102** as do the input signals from the coin switch **18** to the accumulator **14**. The contacts **624** are included in the circuit **10** so that the payback motor **86** can be cycled to empty the coin tubes in the vending machine without causing an accumulation in the accumulator **14**.

The accumulator **14** which at this time is in its back count condition due to the conditioning thereof by the refund flip-flop **82** has its count reduced by one for each impulse produced when the payback switch **88** closes. Whenever the condition of the accumulator **14** has been reduced to a condition representing the exact amount as established by either the price control **28** or **30** the price control **28** or **30** produces an output signal. These output signals are fed through the appropriate gate **36** or **38** to the control circuit **40** or **60** to produce a reset signal which passes through the gates **46** or **66** to reset the refund flip-flop **82** if the signal which passes is from the proper channel. It should be obvious that either of the control circuits **40** or **60** may produce a reset signal under the proper circumstances whether or not it is in the channel of the last initiated vend. It is the function of the channel determining flip-flop **92** and the gates **46** and **66** to block any such reset signals if they are from the wrong channel. For example, if an A channel vend was last made, the channel determining flip-flop **92** causes gate **46** to be open and the gate **66** to be closed. This means that a reset signal from a control circuit **60** such as might be produced when the count in the accumulator **14** is reduced to the setting of the price control **30** of the B channel, will be blocked but reset signals from the control circuit **40** will be allowed to pass therethrough to reset the refund flip-flop **82**.

The reset signals are negative impulses which pass through the diode **406** or **426** of the gate **46** or **66**, respectively, and through the capacitor **408** and by way of terminal I to the base of the transistor **560** (FIG. 4) in the refund flip-flop **82**. This negative impulse reset signal causes the transistor **562** in the vend flip-flop to return to its conducting condition. In this manner, the refund flip-flop **82** is reset or returned to its non-payback condition thereby terminating the payback operation, and at the same time it returns the accumulator **14** to its forward count condition by causing the transistor **570** to again conduct and the transistor **574** to stop conducting.

When the refund flip-flop **82** switches back from its set to its reset condition, the potential on the collector of the transistor **562** in the refund flip-flop **82** abruptly changes from a positive potential to a ground or near ground potential. This generates a negative impulse which is conducted to the reset means **80**. This causes the reset means **80** to reset the circuit **10**. This last mentioned negative impulse passes through series connected capacitor **650**, diode **652** and resistor **654** to the base of a transistor **656** in the reset means **80**. The junction between the diode **652** and the resistor **654** is held positive by means of a connection to the positive potential source through another resistor **658**. The resistors **658**, **654** and another resistor **660** are connected in series between the positive potential source and ground to form a voltage network to supply base current to the transistor **656** to cause it to normally be in a conducting condition. The negative impulse generated when the refund flip-flop **82** returns to its reset condition causes the transistor **656** to momentarily cease conducting.

The emitter of the transistor **656** is connected through a resistor **662**, a level sensing diode **664** and another resistor **666** to ground. When the transistor **656** momentarily ceases conducting the level sensing diode **664** also ceases conducting and the potential on its sensing element rises from near ground potential to a positive value which is coupled through a resistor **668** and a properly oriented diode **670** to the base of another transistor **672**. The junction between the level sensing diode **664** and the resistor **668** is biased positive by a connection to the positive potential source through a resistor **674** while the potential at the junction between the diode **670** and the base of the transistor **672** is negatively biased by means of a connection to the negative potential source through a resistor **676**. When the level sensing diode **664** is conducting the transistor **672** is held in a non-conducting condition by the negative potential which passes through resistor **676**. When the level sensing diode **664** ceases conducting, however, the positive potential is fed through the resistors **674** and **668** and the diode **670** to the base of the transistor **672** to provide base current therefor to cause it to go into a conducting condition.

The emitter of the transistor **672** is grounded and its collector is connected to the base of reset transistor **680** in the reset means **80** through a resistor **682**. The reset transistor **680** is normally held in a conducting condition by positive current fed from the positive potential source through a current limiting resistor **684** which is connected in series with resistor **682**. When the transistor **672** is caused to conduct, it shunts the base current of the reset transistor **680** which ceases conducting. The emitter of reset transistor **680** is grounded and its collector is connected to the positive potential source through a load resistor **686**. When the reset transistor **680** ceases to conduct, its collector potential rises to a positive potential and this positive potential is applied through a circuit which includes terminal B to the accumulator **14** and to the credit flip-flops **50** and **70** to reset them. In so doing, this momentarily interrupts the ground potential normally connected to the emitters of the transistors **436** and **450** in the credit flip-flops **50** and **70**, respectively (FIG. 5) and removes the ground from the emitters of the transistors **208**, **252**, **256** and **260** in the accumulator **14** (FIG. 3). The collector of the reset transistor **680** is also connected to the emitter of the transistor **560** in

the refund flip-flop 82 to remove its ground connection and to cause the transistor 560 to cease conducting thus returning the reset flip-flop 82 to its reset or no payback condition which in turn ends the payback operation.

The reset means 80 can also be energized by a negative impulse on terminal J which is connected between the resistor 658 and resistor 654 (FIG. 4). Such negative impulses are transmitted from the gates 44 and 64 so that a reset operation is commenced when a vend has been made and the accumulator 14 is in a condition representing the exact amount of the vend.

The reset means 80 are also designed to protect the circuit 10 from persons who try to inject false signals into the circuit by interrupting the line power or otherwise try to introduce transients. Transistor 672 which controls the operation of the reset transistor 680 conducts as soon as the power supply 94 starts to come up to its operating voltage. The transistor 672 remains in a conducting condition, which in turn causes the reset transistor 680 to reset the circuit 10, until the level sensing diode 664 senses a sufficient build up of potential thereacross to safely allow the rest of the circuit 10 to begin normal operation. At this time, the diode 664 breaks down and conducts which reduces the potential on the base of the transistor 672 and causes it to cease conducting so that reset transistor 680 goes into a conducting condition which allows the circuit 10 to operate normally thereafter.

The power supply portion 94 of the circuit is shown in FIG. 2 and is constructed to provide regulated positive and negative direct current sources and an unregulated source of positive pulsating direct current. The power supply 94 includes connections to an A.C. source of power labeled L1 and L2. A transient suppression diode 702 is connected in parallel with series connected capacitor 704 and resistor 706 across the lines L1 and L2 to suppress transients or any other internally or externally generated signals which might adversely effect the operation of the circuit 10. The power leads L1 and L2 are connected across the primary 708 of a transformer 710 which has two secondary windings 712 and 714. The first secondary winding 712 is connected to a full wave rectifier circuit 716 whose output supplies the positive potential sources for the circuit 10. The positive side of the full wave rectifier 716 is connected to various points of the circuit 10 as the unregulated positive pulsating D.C. power source (+). The positive side of the rectifier 716 is also connected through a diode 718 to a voltage regulating circuit 720 which supplies the regulated positive direct current to the circuit on terminals marked +. The voltage regulator circuit 720 is shown as including two transistors 722 and 724, a zener diode 726 and associated components connected as shown. The other transformer secondary winding 714 supplies the negative power source for the circuit 10. The negative D.C. power source includes a rectifier diode 728 for half wave rectifications as well as other components to reduce the pulsating component thereof. The negative power source also includes a zener diode 730 and associated circuit components connected as shown to clamp the negative potential source to a predetermined value.

The circuit 10 also includes relay contacts 750, 752 and 754 which are connected to the A.C. line voltage and to various points within the vending machine which are not part of the present circuit. The relays 750, 752 and 754 are used to control the mechanical components within the vending machine. The relay contacts 750 are actuated by the A channel vend relay 476, the contacts 752 are actuated by the B channel vend relay 508 and the contacts 754 are actuated by the payback relay 618. As shown, each set of the contacts includes transient suppression means including suppressor diodes and other circuitry to minimize the transient effects caused when the relay contacts open or close, and to prevent these effects from feeding in through the power supply 94 to the rest of the circuit where they might possibly cause erroneous operations.

Thus there has been shown and described novel multi-price, multi-channel coin control means for use in vending machines and similar devices which fulfill all of the objects and advantages sought therefor. Many changes, modifications, variations, adaptations and other uses and applications of the subject control means will, however, become apparent to those skilled in the art after considering this specification and the accompanying drawings, which discloses one of many possible embodiments thereof. All such changes, modifications, variations, adaptations and other uses and applications which do not depart from the spirit and scope of the invention are deemed to be covered by the invention which is limited only by the claims which follow.

What is claimed is:

1. Means for establishing a vend price for a vending machine or the like, said machine having a coin receiving unit for receiving coins of selected denominations and capable of vending articles at different selectable prices, said coin receiving unit producing output signals representative of the value of each coin deposited therein, said vending machine including accumulator means having an input connected to the output of the coin receiving unit, said accumulator means having a plurality of bi-stable circuit stages the combined conditions of which represent the total amount of money deposited in the coin receiving unit during a vending operation, each stage of the accumulator means having a first output representing one state of said stage and a second output representing the other state of said stage, and means by which a customer can initiate a vend operation whenever the amount accumulated in the accumulator means at least equals a selected vend price, the improvement comprising at least two similar vend and vend control channels each selectable and operable to the exclusion of the others and each having means for establishing a selectable vend price, means to control the refunding of amounts deposited in excess of its established vend price, and each including a two position switch corresponding to each respective stage of the accumulator means, each of said switches having a first contact connected to one of the outputs of the associated accumulator stage, a second contact connected to the other output of the associated accumulator stage, and a third contact selectively movable between positions making electrical contact with the first and second contacts, and means in each of said control channels connecting said associated third con-

tacts to the means by which the customer can initiate a vending operation.

2. The means for establishing a vend price defined in claim 1 wherein said two position switches are slide switches, the switches corresponding to adjacent stages of the accumulator means representing money values in a ratio of 2 to 1.

3. A control circuit for a vending machine having a coin unit with a switch corresponding to the money value of each different coin denomination acceptable therein, each of said coin switches producing at least one output, at least one of said coin switches having means connected thereto to control the production of additional output signals sufficient in number so that the total number of output signals produced when said one switch is activated together with the actuations of the other coin switches by said coin corresponds to the number of times the value of the lowest acceptable coin is divisible into the value of said coin means adjustable to establish a vend price including at least two similar circuit channels each having price control means and means actuatable by a customer to select a particular one of said channels for operation to the exclusion of the other channel and initiate a particular vend under control of a selected one of the channels, means in each channel to prevent vend and refund operations until the amount deposited at least equals the price of the selected vend, said channels including coupling means which operate to inhibit operation of the non-selected channel, an accumulator circuit having an input connected to receive the output signals of said coin unit, means for controlling the operation of the accumulator circuit including first means to activate the accumulator circuit to additively accumulate the equivalent value of all coins deposited in the coin unit during each vending operation, other means responsive to the accumulation in the accumulator circuit of amounts in excess of the cost of a selected vend as determined by the selected channel, said other means including means to refund said excess accumulated amounts, said refund means including means to generate a refund signal every time a coin is refunded, means to apply said refund signals to the input of the accumulator circuit, and means to activate the accumulator circuit during refunding of said excess amounts to cause said accumulator circuit to subtract from the amount accumulated therein an amount equal to the value of each coin refunded until the amount in the accumulator equals the selected vend price.

4. The control circuit defined in claim 3 wherein said refund means includes means for effecting the refund of coins a coin at a time, said second means in the refund means including means to cause said accumulator circuit to go from an additive to a subtractive counting condition during refunding operations.

5. The control circuit defined in claim 3 wherein the coin unit in the vending machine includes a first switch activated once by the deposit of each coin in the coin unit to produce an output for applying to the input of the accumulator circuit, a second switch actuatable once by the deposit of each coin having a value equal at least to twice the value of the lowest coin denomination acceptable by the coin unit, a third coin switch actuatable once by the deposit of each coin having a value greater than twice the value of the lowest acceptable coin denomination, and means associated with the third coin switch for producing additional output signals for feeding to the input to the accumulator circuit for each additional time in excess of three that the value of a deposited coin is greater than the value of the lowest acceptable coin denomination.

6. The control circuit defined in claim 3 including means for adjusting the vend prices that can be selected.

7. Control means for vending and similar machines which have units for receiving coins of selected denominations and are capable of vending articles at one or more prices selectable by the customer, said control means comprising accumulator means having an input and an output, means connecting the accumulator input directly to the coin receiving unit to respond to outputs produced thereby when coins are deposited, accumulator control means operatively connected to the accumulator means and including means to cause said accumulator to accumulate additively in response to outputs received from the coin unit to accumulate the money value of all coins deposited therein during a vending operation, a set of similar control means associated with each selectable vend, each of said sets of controls including means to establish the vend price thereof and vend selecting means operable by the customer to select a particular one of the sets, of similar controls to the exclusion of the other similar sets other means to prevent vend and refund operations from taking place until the amount deposited at least equals the price of the selected vend as established by the particular selected set of controls, payback means operable under the control of the selected set of controls to payback amounts deposited in the coin unit and accumulated in the accumulator means in excess of the cost of the selected vend, said payback means including means to cause said accumulator means to accumulate in a subtractive direction to reduce the amount accumulated therein by the value of each coin paid back until the amount accumulated in the accumulator means equals the value of the selected vend, and means to reset the accumulator means and the payback means to a predetermined reset condition when the accumulator has an amount accumulated therein that exactly equals the vend price as established by the selected set of controls.

8. The control means defined in claim 7 wherein said sets of similar control means include two similar control channels each including price control means adjustable to control the vend price thereof, means for establishing a credit in said channel whenever the amount deposited at least equals the vend price established therefor, and switch means actuable by the customer to initiate a selected vend under control of the selected control channel.

9. The control means defined in claim 8 including means in each of said two similar control channels operable when one of said channels is selected by the customer to disable the non-selected channel.

10. The control means defined in claim 8 including means associated with the said two similar control channels to prevent operation thereof when the amount accumulated in the accumulator means is less than the cost of the selected vend.

11. The control means defined in claim **10** wherein said means associated with said two similar control channels includes circuit means to prevent initiation of a vend operation whenever the accumulator means are in their reset condition and the price control means associated with one of said two similar channels is in a zero vend price condition.

12. A control circuit for controlling the operations of coin operated machines having coin receiving units, means for making vends, and payback means for refunding amounts deposited in the coin receiving units in excess of the price of selected vends, said machines being capable of vending more than one different product and at selectable prices, said control circuit comprising accumulator means capable of being in an adding or a subtracting mode, and associated control means for selectively switching the accumulator means between the adding mode when coins are being deposited and a subtracting mode when refunds of amounts deposited in excess of the selected vend price are refunded, a pair of similar vend control channels each including channel price control means which are adjustable to establish an associated vend · price therefor, each channel also including means for establishing a credit condition therein whenever an amount deposited at least equals the established vend price, said credit establishing means preventing vend and refund operations from taking place until an amount deposited at least equals the price of the selected vend, vend selector means associated with each channel including means operable by a customer for initiating a vend operation from said channel, means under control of the vend selector means to enable a vend operation to taken place whenever the amount accumulated in the accumulator means at least equals the selected vend price, delay means under control of the vend means for energizing the payback means to initiate a payback operation including means to switch the accumulator means from its adding to its subtracting mode, said payback means including means for refunding a coin at a time, said refund means causing the accumulator means to subtract an amount therefrom equivalent to the value of each coin refunded, until the amount in the accumulator equals the vend price other means responsive to the accumulator means having an accumulation therein exactly equal to the value of the price of the selected vend, said last named means including means to terminate the refund operation, and means under control of the termination of the refund operation to reset the accumulator means and the channel credit means.

13. The control circuit defined in claim **12** including means responsive to the reset condition of the accumulator means to prevent the possibility of making a vend whenever the accumulator means are in their reset condition at a time when the channel price control means associated with either vend control channel is erroneously set in a zero price condition.

14. The control circuit defined in claim **12** including means associated with each channel and operable when the associated vend selector means are actuated by the customer at a time when the amount accumulated in the accumulator means at least equals the selected vend price of said selected channel to inhibit operation of the non-selected channel from initiating a refund or a vend operation.

15. The control circuit defined in claim **12** including a channel determining a bi-stable circuit having its inputs coupled between the vend selector means in said two similar circuit channels, a gate circuit in each of said channels having an input connected to the output of said bi-stable circuit, said bi-stable circuit producing an output for operating through a selected one of said gate circuits to terminate a refund operation whenever the amount accumulated in the accumulator means has been reduced during a payback operation to the exact vend price as established by the price control means in the channel selected for actuation by the customer.

16. The control circuit defined in claim **12** including power supply means having means for sensing a predetermined circuit voltage condition and means controlled by each occurrence of said predetermined voltage for resetting the accumulator means and the means in each channel for establishing a credit condition.

17. The control circuit defined in claim **12** wherein each of said similar channels includes means to delay a vend operation initiated by the customer who operates the vend selector means before the amount deposited is sufficient to equal the selected vend price, said customer continuing his initiation of the vend selector means until after the last coin deposited during a vend operation has cleared the coin receiving unit.

18. The control circuit defined in claim **12** including means for energizing the payback means without causing any accumulation to be made in the accumulator means.

19. The control circuit defined in claim **12** including a gate circuit associated with each of said channels, said gate circuit in each channel being connected between the vend selector means including the associated means under control of the vend selector means therein and the refund means to initiate a refund operation whenever the amount accumulated in the accumulator means exceeds the price of a selected vend.

20. The control circuit defined in claim **19** wherein each of said channels includes a second gate connected between the vend selector means and the reset means to initiate a reset operation whenever the amount accumulated in the accumulator means equals the price of a selected vend.

* * * * *

UNITED STATES PATENT OFFICE
CERTIFICATE OF CORRECTION

Patent No. 3,687,255 Dated August 29, 1972

Inventor(s) Stanley G. Johnson II

It is certified that error appears in the above-identified patent and that said Letters Patent are hereby corrected as shown below:

Column 9, line 1, after "to" insert "simplify the understanding and explanation of the";

Column 11, line 34, "connected" should be "connect".

Column 14, line 30, "200" should be "202".

Column 14, in the Table, the out-of-line digit in column 5 should be properly aligned.

Column 32, line 26, "selecting" should be "selection"; line 27, after "sets" cancel the comma (,); line 29, after "sets" insert a comma (,).

Column 34, line 12, cancel "a" (second occurrence).

Signed and sealed this 3rd day of April 1973.

(SEAL)
Attest:

EDWARD M.FLETCHER,JR.
Attesting Officer

ROBERT GOTTSCHALK
Commissioner of Patents

FORM PO-1050 (10-69)

USCOMM-DC 60376-P69
* U.S. GOVERNMENT PRINTING OFFICE : 1969 O—366-334