March 6, 1928. 1,661,827

E. T. HESSLE ET AL

CATALYTIC APPARATUS

Filed April 26, 1926

Fig. 1

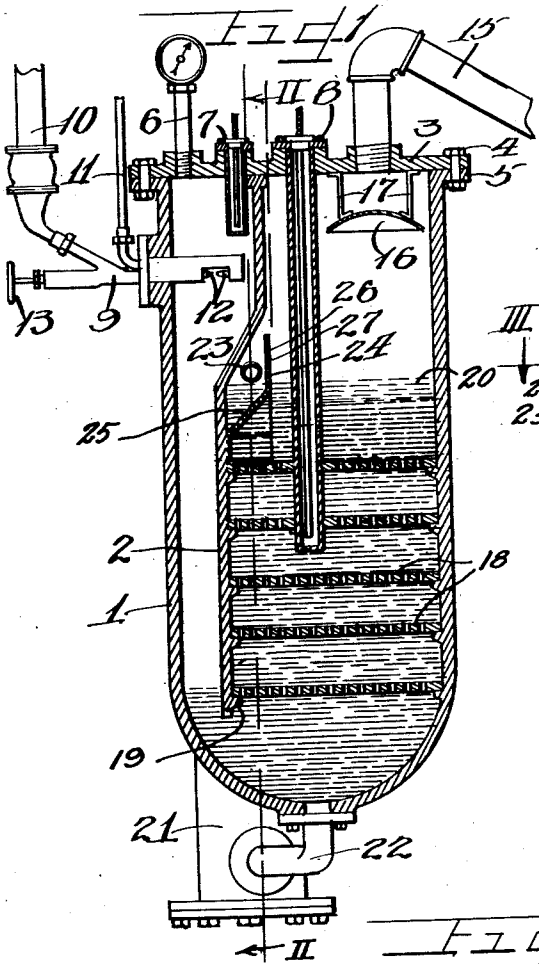

Fig. 2

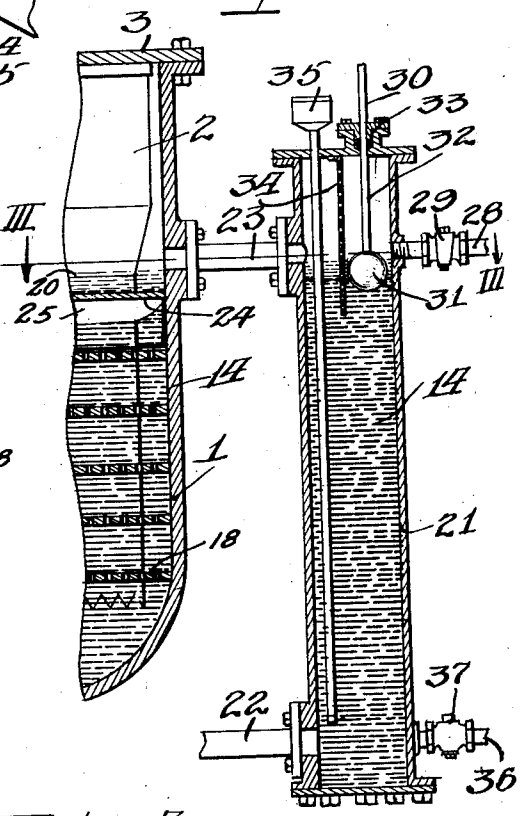

Fig. 3

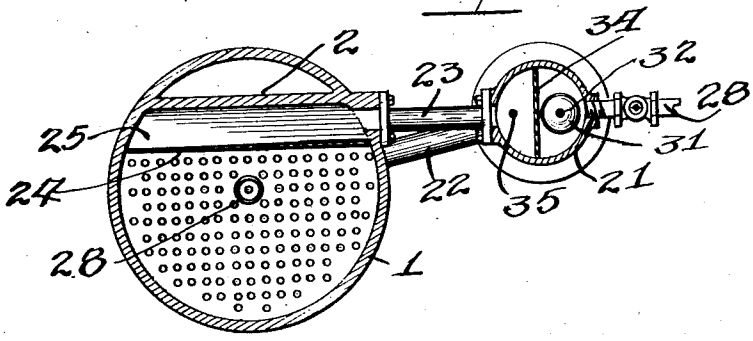

Inventors
Eric T. Hessle
Willy Letgemann
by Charles W. Hills Attys.

Patented Mar. 6, 1928. 1,661,827

UNITED STATES PATENT OFFICE.

ERIC TH. HESSLE AND WILLY LELGEMANN, OF LEMONT, ILLINOIS.

CATALYTIC APPARATUS.

Application filed April 26, 1926. Serial No. 104,541.

This invention relates to apparatus for the catalytic treatment of materials and more particularly for the catalytic conversion of hydrocarbons into lighter hydrocarbons, as in the conversion of petroleum oils and residues into lower boiling compounds.

In our co-pending application "apparatus for the conversion of hydrocarbon oils", Serial No. 16,983, filed March 20, 1925, there is described an apparatus of which our present invention constitutes an improvement. In that apparatus no provision was made for continuously removing residues of oil and carbon formed or deposited on the surface of the catalyst. Such residues are formed only when working with very viscous residues, asphalt, pitch, tar oils and others which contain very highly polymerized hydrocarbons in connection with oxygen and free carbon in large quantities, and it is the purpose of this invention to provide an apparatus suitable for use in the conversion of such residues etc.

It is, therefore, an object of this invention to provide such means.

It is a further object of this invention to provide an apparatus for the catalytic conversion of oils and other materials wherein an equalizing vessel is provided to maintain the body of the catalyst at the desired height in the reaction vessel.

It is a further object of this invention to provide an apparatus for the catalytic conversion of oils wherein means are provided for indicating and regulating the height of the catalyst in the apparatus.

Other and further important objects of this invention will be apparent from the disclosures in the specification and accompanying drawings.

The invention (in a preferred form) is illustrated in the accompanying drawings and hereinafter more fully described.

On the drawings:

Figure 1 is a longitudinal sectional view of apparatus embodying the principles of our invention, with parts in elevation.

Figure 2 is a fragmentary sectional view taken on line II—II of Figure 1.

Figure 3 is a sectional view taken on line III—III of Figure 2.

As shown on the drawings:

The reference numeral 1 indicates a reaction vessel, preferably made of cast iron and provided with a longitudinal partition 2 extending from the top of said vessel 1 to a point near the bottom thereof and dividing said vessel into two unequal sized compartments. A cover 3 is adapted to be removably bolted to the top of said reaction vessel 1 by means of bolts 4 extending through an annular flange 5 formed at the mouth of said vessel. Said cover 3 is provided with a pressure gauge 6 and thermometer wells 7 and 8 extending through said cover into the two compartments formed in said vessel 1.

An oil fog producing device 9 extends through the wall of the reaction vessel 1 into the left hand or smaller compartment formed by the partition 2. Said fog producing device 9 is adapted to be connected from the outside to an oil supply pipe 10 and a gas or vapor supply pipe 11, said pipes 10 and 11 communicating with a pair of opposing nozzles 12 positioned on the inner end of said device 9 within the smaller compartment. A valve 13 regulates the flow of oil into said device 9. A fog of oil is adapted to be produced by the concussion of the opposing streams of oil and gas issuing from the nozzles 12. This fog of oil is produced under sufficient pressure to cause it to pass down through a body of molten or fluid catalyst 14 with which the reaction vessel 1 is partially filled, and up into the compartment on the other side of the partition 2. The particular catalyst used is, of course, independent of this invention, but tin or an alloy of tin is the one which we prefer to use in our process for the conversion of oils. The products of the catalytic decomposition of the oil are discharged through a pipe 15 secured in the cover 3. A curved baffle plate 16 supported from the cover 3 by means of brackets 17 in spaced relation to the mouth of the pipe 15 prevent the catalyst from being carried along with the oil conversion products out of the vessel 1. Perforated horizontal baffle plates 18 are supported in the larger compartment in parallel spaced relation by means of ribs 19 formed on the side of the partition 2 and on the inner wall of the vessel 1. These baffles 18 serve to break up the flow of the oil fog through the molten catalyst and to lengthen the time of contact of the fog with the catalyst.

When the catalytic conversion is carried out on such residues, tar oils, asphalts etc., as referred to above, a certain amount of oil residue and carbon are ordinarily formed

or deposited on the surface of the catalyst 14, as represented by the oil layer 20. I have, therefore, provided means for removing this oil layer either continuously or intermittently as will now be described.

An equalizing vessel 21, comprising in its simplest form an upright cylinder flanged at each end, is connected to the reaction vessel 1 from near the bottom of said equalizing vessel 21 by means of a bent pipe 22 entering the extreme bottom of the reaction vessel 1. A side communicating pipe 23 is also provided at such an elevation as will permit the desired depth of catalyst in the reaction vessel 1 and at the same time permit gravitational circulation of the catalyst between vessels 1 and 21. The pipe 23 enters the reaction vessel 1 at a point adjacent the partition 2 and on the other side thereof from the fog producing device 9. An angle shaped baffle plate 24 is secured to the partition 2 into the wall of the reaction vessel 1 in such a way as to prevent turbulence of the catalyst around the mouth of said pipe 23. The inclined lower portion 25 of the baffle plate 24 is imperforated so as to prevent the oil fog from bubbling up into the pipe 23, but the vertical portion 26 of said baffle 24 is provided with perforations 27 to allow the passage therethrough of the catalyst 14 and the oil layer 20.

It will thus be apparent that as soon as the oil layer 20 builds up above the level of the pipe 23, said oil layer will pass over through the pipe 23 into the equalizing vessel 21, which is provided with a draw-off pipe 28 positioned at the level of said pipe 23, and fitted with a plug cock 29. The level of the catalyst in the equalizing vessel 21 is determined by means of a floating indicator 30 of any suitable construction. Said floating indicator 30 is here shown as comprising a hollow metal ball 31 attached to a stem 32 which passes through a packing gland 33 in the top of said equalizing vessel 21. A perforated baffle plate 34 is suspended from the top of said equalizing vessel 21 between the opening of the pipe 23 and the indicating float 30 to prevent splashing of the oil and catalyst against said indicating float, and also against the opening into the draw-off pipe 28. A thermometer well 35 is provided for the equalizing vessel 21. The equalizing vessel 21 is also fitted with a drain line 36 positioned near the bottom thereof and having a plug cock 37 to allow the catalyst 14 to be drawn off when necessary.

The operation is as follows:

The material to be treated, such as a petroleum oil product is introduced through the pipe line 10 into the fog producing device 9 from whence it issues as a fog by virtue of its concussion with a gas or vapor introduced through the pipe 11, the petroleum product and gas being directed against each other by means of the opposing nozzles 12. The oil fog so formed builds up in the left hand compartment of the reaction vessel 1 until sufficient pressure has been formed to cause the oil fog to pass bodily through the body of molten or fluid catalyst 14, with which the reaction vessel 1 is partially filled. In so doing the oil fog will naturally depress the catalyst in the left hand compartment and cause the catalyst to rise in the right hand compartment. By means of the draw-off line 28 of the equalizing vessel 21, the height of catalyst in the reaction vessel is regulated to approximately the level of the communicating pipe line 23. This level is easily determined by means of the indicating float 30. During the progress of the conversion of the oil into lower boiling products, a certain amount of undecomposed oil, residues and carbon forms on the surface of the catalyst as represented by the layer 20. If not removed this layer would gradually build up and obstruct the further operation of the process.

However, in the form of apparatus provided, this may be easily prevented as follows: As soon as the oil layer 20 builds up above the level of the pipe 23 it passes over into the equalizing vessel 21 from which it can be skimmed off through the draw-off line 28. By properly graduating the stem of the floating indicator 30, it is possible to ascertain at any time the depth of the oil layer 20 so that it need never be allowed to accumulate beyond a certain depth, which in practice has been found to be about one inch. As there is no appreciable pressure, as my process is carried out, within the equalizing vessel 21 above the catalyst, the plug cock 29 may be kept open to continuously remove the oil layer 20.

It will be evident that the equalizing vessel 21 also serves to stabilize the level of the catalyst 14 in the reaction vessel 1. Without such an equalizing vessel it is apparent that due to any fluctuation in the pressure of the oil fog, the catalyst 14 would tend to surge back and forth between the two compartments in the reaction vessel, and at times offer more resistance to the passage of the oil fog than at other times. However, with the reaction vessel 1 in constant open communication at the bottom and side with the equalizing vessel 21, this surging effect is minimized.

While we have described our apparatus in the specification and claims in connection with a process for the catalytic conversion of oils and other hydrocarbons, it will be understood that we do not wish to limit the claims for our apparatus to any particular use, since it would be equally applicable in any catalytic process where a fluid catalyst is employed.

We are aware that many changes may be

made and numerous details of construction may be varied through a wide range without departing from the principles of this invention, and we therefore do not purpose limiting the patent granted hereon otherwise than necessitated by the prior art.

We claim as our invention:

1. In an apparatus for the catalytic conversion of oils, a reaction vessel for containing a fluid catalyst, a partition in said vessed dividing said vessel into compartments communicating near the bottom, an oil fog producing device in one of said compartments and an oil discharge line leading from said other compartment whereby said oil fog is caused to pass through said catalyst, an equalizing vessel in communication with said reaction vessel and draw-off means on said equalizing vessel for removing material from the surface of said catalyst.

2. In an apparatus for the catalytic conversion of oils, a reaction vessel for containing a fluid catalyst, a partition in said vessel dividing said vessel into compartments communicating near the bottom, an oil fog producing device in one of said compartments and an oil vapor discharge line leading from said other compartment whereby said oil fog is caused to pass bodily through said catalyst, an equalizing vessel in side and bottom communication with said reaction vessel for gravitational circulation of said catalyst between said vessels and a draw-off line on said equalizing vessel for drawing off unvaporized oil residues and carbon.

In testimony whereof, we have hereunto subscribed our names.

ERIC TH. HESSLE, PH. D.
WILLY LELGEMANN.