A. P. DULGEROFF.

CABINET.

APPLICATION FILED FEB. 8, 1915.

1,162,146.

Patented Nov. 30, 1915.

2 SHEETS—SHEET 1.

Fig. 1

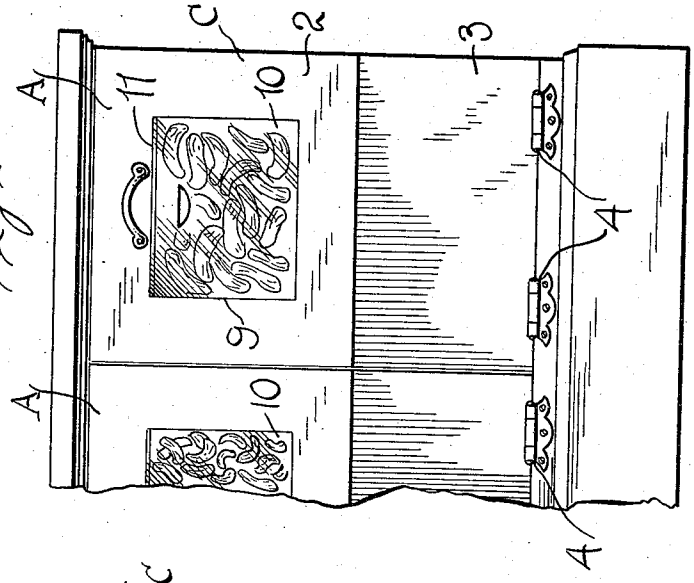

Fig. 2

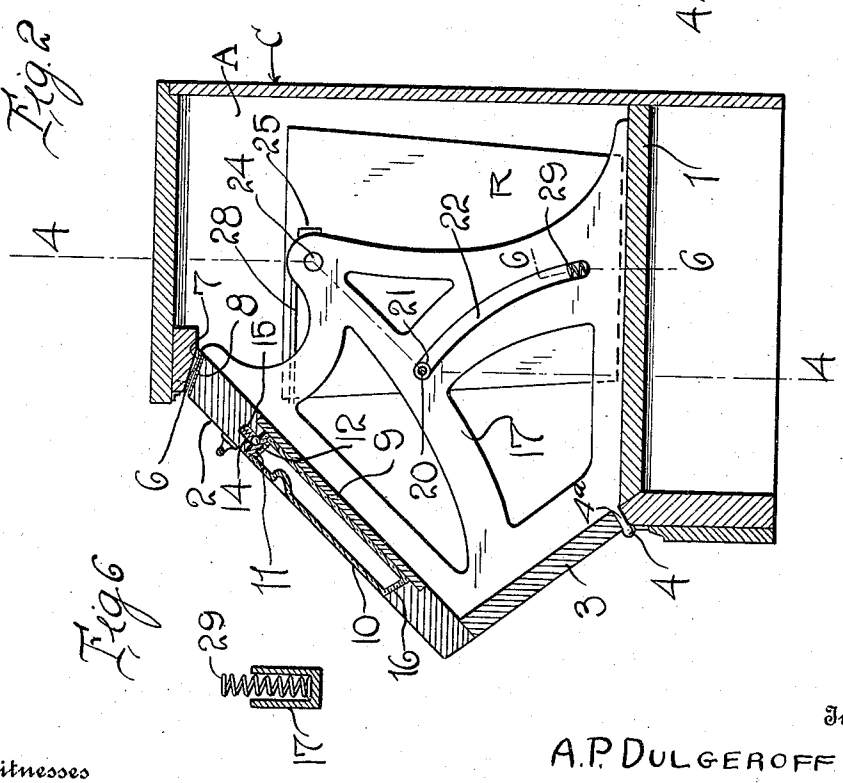

Fig. 6

Witnesses

Robert M. Sutphen.

A. L. Hind.

Inventor

A. P. DULGEROFF

By Watson E. Coleman

Attorney

COLUMBIA PLANOGRAPH CO., WASHINGTON, D. C.

A. P. DULGEROFF.

CABINET.

APPLICATION FILED FEB. 8, 1915.

1,162,146.

Patented Nov. 30, 1915.

2 SHEETS—SHEET 2.

Fig. 3

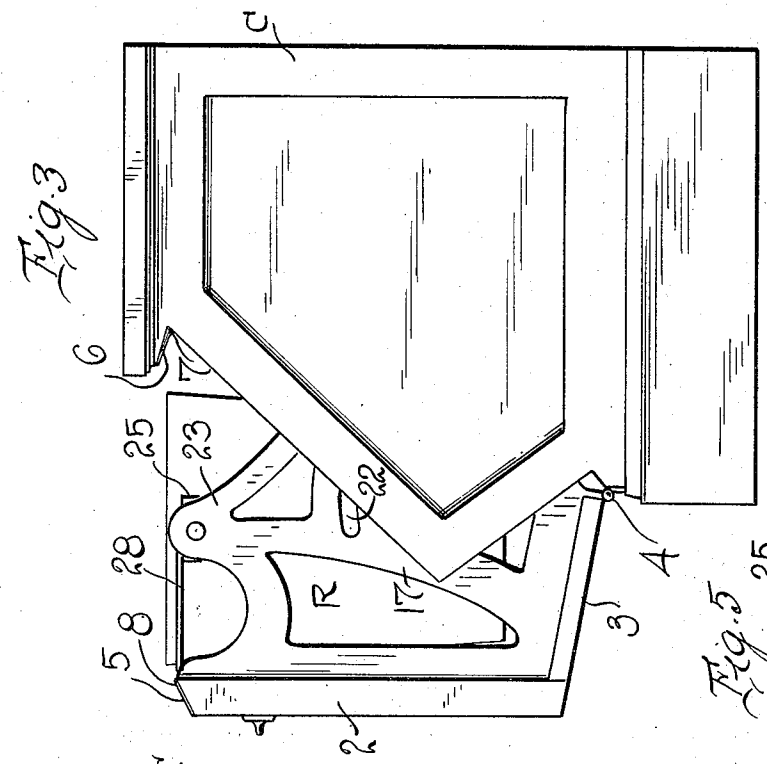

Fig. 5

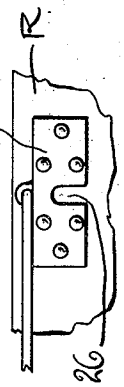

Fig. 4

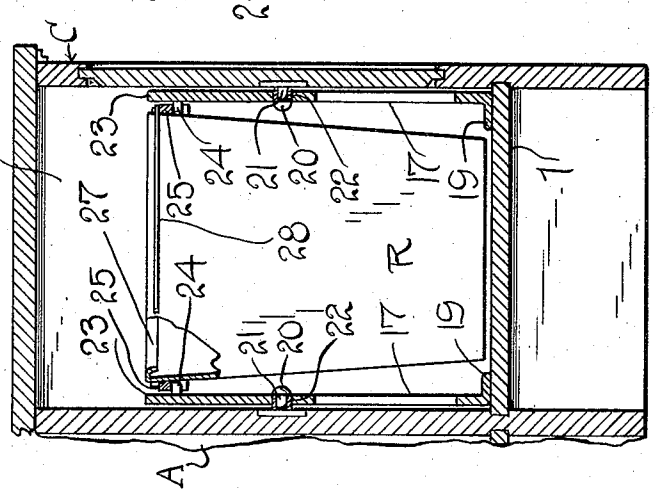

Inventor

A. P. DULGEROFF

Witnesses

Robert M. Sutphen.

A. L. Hinkle.

By Watson E. Coleman

Attorney

COLUMBIA PLANOGRAPH CO., WASHINGTON, D. C.

UNITED STATES PATENT OFFICE.

ATANAS P. DULGEROFF, OF GRANITE CITY, ILLINOIS.

CABINET.

1,162,146. Specification of Letters Patent. Patented Nov. 30, 1915.

Application filed February 8, 1915. Serial No. 6,810.

To all whom it may concern:

Be it known that I, ATANAS P. DULGEROFF, a citizen of Bulgaria, residing at Granite City, in the county of Madison and State of Illinois, have invented certain new and useful Improvements in Cabinets, of which the following is a specification, reference being had to the accompanying drawings.

This invention relates to certain improvements in cabinets; and an object of the invention is to provide a device of this general character having novel and improved means whereby the contents of the cabinet are substantially hermetically sealed when the cabinet is in closed adjustment.

Furthermore, it is an object of the invention to provide a device of this general character having novel and improved means whereby the contents thereof are automatically removed from within the cabinet upon the opening thereof in order that convenient access may be had to such contents.

The invention also has for its object to provide a novel and improved device of this general character especially designed and adapted for use with merchandise contained in receptacles and whereby a receptacle may be operatively engaged with a closure member of the cabinet so that said receptacle is withdrawn from within the cabinet upon opening adjustment of the closure member.

The invention consists in the details of construction and in the combination and arrangement of the several parts of my improved cabinet whereby certain important advantages are attained and the device is rendered simpler, less expensive and otherwise more convenient and advantageous for use, all as will be hereinafter more fully set forth.

The novel features of the invention will be carefully defined in the appended claim.

In order that my invention may be the better understood, I will now proceed to describe the same with reference to the accompanying drawings, wherein—

Figure 1 is a fragmentary view in front elevation of a cabinet constructed in accordance with an embodiment of my invention; Fig. 2 is a vertical sectional view taken through one of the compartments of my improved cabinet, the closure member being in closed adjustment; Fig. 3 is a view in side elevation of the device as herein embodied, with the closure member adjusted in open position; Fig. 4 is a sectional view taken substantially on the line 4—4 of Fig. 2; Fig. 5 is an enlarged fragmentary view illustrating the upper portion of a receptacle and showing in detail a means whereby the same is operatively engaged with the closure member; and Fig. 6 is an enlarged fragmentary sectional view illustrating a buffer as herein employed.

As disclosed in the accompanying drawings, C denotes a cabinet constructed in accordance with an embodiment of my invention and divided into a plurality of compartments A by the shelves or partitions 1, the forward face of each compartment being open. As the several shelves together with their concomitant parts are in duplication, it is believed that a thorough understanding of my invention will be obtained from the description as applied to one of said compartments.

The open face of each compartment is adapted to be controlled by a closure member 2 substantially L-shape in vertical section as herein embodied, the heel portion 3 whereof being disposed outwardly relative to the cabinet proper, while the lower marginal portion of the closure member is hingedly engaged, as at 4, with the cabinet at a point substantially flush with the lowermost shelf or partition and it is to be observed that the forward edge of the compartment is beveled as at 5 to assure a tight joint when the closure member is adjusted in closed position. It is to be particularly observed in Fig. 2 that one of the members 4^a of each of the hinges is integrally produced with a bracket 17 whereby the hinged connection is directly with said bracket. The upper end of the closure member is adapted, when in closed adjustment, to engage the cleat 6 disposed along the upper edge of the door of the cabinet and the opposed faces of said cleat and closure member are correspondingly beveled, as indicated at 7, in order to also assure a tight joint when the closure member is in closed position. I also find it of advantage to dispose along the beveled portion of the cleat 6, the yieldable plate 8 preferably of metal for a purpose which is believed to be self-evident.

Produced in the outer face of the upper portion of the closure member 2 at substantially the center thereof is a pocket 9 of predetermined configuration, in which is adapt-

ed to be snugly fitted a transparent receptacle 10 open at one end and adapted to be closed by the removable cover 11, said cover having produced therein at substantially its longitudinal center a recess 12 adapted to accommodate the spring pressed ball 14 positioned within the recess 15 formed in the upper edge of the pocket 9 whereby it will be perceived that the receptacle 10 will be maintained against accidental displacement from within the pocket, it being observed that the lower edge 16 of the pocket is beveled inwardly and the adjacent end of the receptacle 10 is correspondingly beveled. Secured to the closure member 2 at opposite sides thereof and projecting inwardly thereof are the bracket members 17, the free lower marginal portions whereof being disposed on such angles as to contact with the lower shelf or partition 1 when the closure member 2 is in closed adjustment, and the free extremities of such lower marginal portions of the brackets are provided with the inwardly disposed lugs or fingers 19, for a purpose which is believed to be self-evident. I also find it of advantage to have one of the members comprised in each of the pivotal connections 4 integrally produced with a bracket 17, as is believed to be clearly shown in Fig. 6.

The side partitions of the compartment C are provided with the inwardly disposed pins 20 having mounted thereon the antifriction rollers 21 adapted to be positioned within the segmental slots 22 produced in the brackets 17, said slots 22 being so positioned and of such a length as to limit the outward movement of the closure member 2 so as to prevent the upper portion of the closure member from passing beyond the vertical.

The brackets 17 at a predetermined point along their upper portions are provided with the upstanding alined extensions 23 provided with the inwardly disposed pins 24 adapted to be detachably engaged by the receptacle R, said receptacle, as herein embodied, being provided at diametrically opposed points with the plates 25 having produced in their lower marginal portions the open slots 26 adapted to receive the pins 24, hereinbefore referred to, and whereby it will be perceived that the receptacle R will be supported for pivotal or swinging movement so that upon the outward movement of the closure member 2, the receptacle will maintain a vertical position. It will also be perceived that upon outward movement of the closure member 2 the receptacle will maintain a vertical position. It will also be perceived that upon outward movement of the closure member 2 the receptacle R will be withdrawn from within the compartment whereby ready and convenient access may be had to the contents thereof.

While I do not wish to be understood as limiting myself to the particular character of merchandise to be employed in connection with the receptacle R, I have found my invention particularly advantageous in connection with preserves, pickles or the like, and in order to identify the contents of a compartment the receptacle 10 is intended to be filled with the same merchandise as contained within the receptacle R within the compartment.

It will also be readily appreciated that the cabinet C may be made of any material desired and it is preferable that in the construction of the cabinet care be exercised to produce the various joints substantially airtight so that the compartment A, when the closure member 2 is adjusted into closed position, will be substantially hermetically sealed. I also find it desirable to have the upper edge portion of the receptacle R provided with the inturned annular flange 27 in order to prevent the discharge of the contents of the receptacle R by the jar or vibrations during the respective movements of the closure member 2 or from any other cause. It is also desirable to provide the receptacle with the bail 28 pivotally engaged therewith at diametrically opposed points in a conventional manner in order that said receptacle may be removed or applied with convenience and facility. It has also been found advantageous in practice to provide each of the brackets 17 with the buffer members 29, herein disclosed as conventional coil springs, adapted to coact with the lower partition 1 and with the pins 20 whereby it will be perceived that abrupt stopping of the closure member 2 at the limit of its movements in opposite directions is prevented.

From the foregoing description, it is thought to be obvious that a cabinet constructed in accordance with my invention is of an extremely simple and comparatively inexpensive nature and is particularly well adapted for use by reason of the convenience and facility with which it may be assembled, and it will also be obvious that my invention is susceptible of some change and modification without material departure from the principles and spirit thereof and for this reason I do not wish to be understood as limiting myself to the precise arrangement and formation of the several parts herein shown in carrying out my invention in practice.

I claim:

A device of the character described comprising, in combination, a compartment having an open face, a closure member for said open face, said closure member being substantially L-shape in vertical section, the heel portion thereof being disposed outwardly relative to the compartment, the lower marginal portion of the closure being hingedly

connected with the base of the compartment, inwardly disposed brackets carried by said closure member, said brackets being provided with upstanding alined extensions and with segmental slots, a receptacle operatively supported by said extensions, the pivotal connection between the receptacle and extensions being so disposed relative to the closure member and the foot of the closure member being of such a length as to permit unobstructed application or removal of the receptacle when the closure member is in open adjustment, inwardly disposed pins carried by the walls of the compartment and disposed through the slots of the brackets for limiting the upper portion of the closure member to a vertical position when the closure member is in open adjustment, and expansible springs arranged at the inner ends of the slots and adapted to engage the pins when the closure member is swung outwardly.

In testimony whereof I hereunto affix my signature in the presence of two witnesses.

ATANAS P. DULGEROFF.

Witnesses:
GRETCHEN LEGG,
HENRY TURTON.

Copies of this patent may be obtained for five cents each, by addressing the "Commissioner of Patents, Washington, D. C."